TENNESSEE VALLEY AUTHORITY
DIVISION OF ENGINEERING DESIGN
THERMAL POWER ENGINEERING BRANCHES
CIVIL ENGINEERING BRANCH

BROWNS FERRY NUCLEAR PLANT

UNITS 1 AND 2

APPROXIMATE TEMPERATURE ZONES

DERIVED FROM A REVIEW OF PHYSICAL

EVIDENCE PRODUCED BY THE

MARCH 22, 1975, FIRE

CEB-75-12

May 15, 1975

Sponsor Engineer B B Neely

Reviewed by [illegible]

Recommended R. C. Giordano for WAE

Project Manager H. G. Russell

Approved [illegible]

Thermal Power Engineering Branches

Civil	Electrical	Mechanical
[illegible]	HBMc J W Chandler/s	[illegible] J. A. Hudson For DRP

Thermal Power Engineering Design Projects

Civil	Electrical	Mechanical	Plant Additions
Floyd A Stone	J C Standifer	George C McNutt Jr.	

Architectural, Hydro and Special Projects Engineering and Design Branches

Civil	Electrical	Mechanical

TENNESSEE VALLEY AUTHORITY

DIVISION OF ENGINEERING DESIGN

THERMAL POWER ENGINEERING BRANCHES

CIVIL ENGINEERING BRANCH

APPROXIMATE TEMPERATURE ZONES

DERIVED FROM A REVIEW OF PHYSICAL EVIDENCE

PRODUCED BY THE MARCH 22, 1975, FIRE

Knoxville, Tennessee

May 15, 1975

FORWARD

On April 18, 1975, a team was established to perform a structures and mechanical equipment evaluation as stated in revision 5, reference 4.1. The responsibilities of this team are further described in reference 4.2.

This report is in partial fulfillment of these responsibilities and represents the implementation of reference 4.3. It contains the methods and assumptions used in the development of the approximate temperature zones presented herein. This information is offered in advance of the structures and equipment evaluation so that it can be used as the common basis for all such determinations in this temperature affected region.

We believe this information to be representative of the temperatures experienced in the region of concern and recommend it be used as the basis of all evaluations involving temperature effects on equipment.

B. B. Neely, DED-CEB (Team Leader) — B B Neely

B. E. Needham, DED-BHP — B. E. Needham

R. E. Bullock, DED-CDB — R E Bullock

R. M. Jessee, DED-MEB (Special Assignment) — Robert Jessee

W. H. Lee, DED-CEB (Special Assignment) — W. H. Lee

J. W. Morgan, DED-BHP — James W. Morgan

J. G. Adair, DED-BHP — James G. Adair

C. A. McLaughlin, DPP — C. A. McLaughlin per

J. E. Poston, DPP — J. E. Poston per

TABLE OF CONTENTS

Section	Title	Page
1.0	Purpose	1
2.0	Authority	1
3.0	Scope	1
4.0	References	1
5.0	General Approach	2
6.0	Procedure for Determination of Temperature Zones	2
7.0	Limitations	7
8.0	Conclusion and Recommendation	8

LIST OF ILLUSTRATIONS

Figure	Title	Page
1	Estimated Temperature Zones - 1500 F	10
2	Estimated Temperature Zones - 1220 F	11
3	Estimated Temperature Zones - 787 F	12
4	Estimated Temperature Zones - 500 F	13
5	Estimated Temperature Zones - 340 F	14
6	Estimated Temperature Zones - 300 F	15
13	Cable Trays	22

LIST OF PHOTOGRAPHS

Figure	Page
7	16
8	17
9	18
10	19
11	20
12	21
14	23
15	24
16	25
17	26

1.0 PURPOSE

The purpose of this study was to determine approximate temperature zones within the region of the March 22, 1975, cable fire at the Browns Ferry Nuclear Plant.

2.0 AUTHORITY

This team, hereinafter called the Program VIII team, was formed on April 18, 1975, and was incorporated in revision 5 of reference 4.1.

3.0 SCOPE

The scope of this effort included the determination of the availability, the gathering, and the interpretation and quantification of physical evidence of the fire. Also included is the organization of the data into a coherent report to provide approximate temperature zones which can be used for all subsequent equipment evaluations.

4.0 REFERENCES

4.1 Memorandum E. F. Thomas to Roy H. Dunham and H. H. Mull, revision 5 dated April and subsequent revisions. Subject - Repair of Damage Caused by the Cable Fire and Return to Service of Browns Ferry Nuclear Plant Units 1 and 2.

4.2 Plan for Evaluation, Repair, and Return to Service of Browns Ferry Units 1 and 2 (March 22, 1975, Fire), VIII - Program for Identification and Evaluation of Affected Structures and Mechanical Equipment.

4.3 Design Criteria for Determination of Temperature Zones for the March 22, 1975, Fire at the Browns Ferry Nuclear Plant, BLN-50-D702, TVA.

4.4 Design Criteria for Evaluating Structural Steel Components Subjected to the Environmental Effects of the March 22, 1975, Fire, BLN-50-D703, TVA.

4.5 Design Criteria for Evaluating Mechanical Piping, HVAC, Ducting, and Piping Components Subjected to the Environmental Effects of the March 22, 1975, Fire, BLN-50-D705, TVA.

5.0 GENERAL APPROACH

The Program VIII team made a preliminary visit to the site of the fire to determine the availability of physical evidence which could be used as indicators of temperatures in the region of the fire. A plan was then established and formal criteria (reference 4.3) was issued. Approximate temperature zones were constructed and are contained herein for use by all concerned with evaluating the temperature effects of the fire.

6.0 PROCEDURE FOR DETERMINATION OF TEMPERATURE ZONES

A field trip to the site of the fire was conducted by the Program VIII team and other personnel selected to assist in the evaluation. During this trip confirmation was made of the existance of physical evidence which could be used as temperature indicators.

Design Criteria BFN-50-D702, reference 4.3, was developed and issued. These criteria established the methods to be employed in the development of estimated temperature zones to be used in all subsequent temperature related evaluations outside of primary containment.

Implementation of these criteria resulted in the establishment of six temperature zones. These approximate zones, figures 1 through 6, represent the probable temperatures of 1500, 1220, 787, 500, 340, and 300 F. Each zone is typified by the prominent reoccurrance of at least one principal physical indicator as shown below:

1500 F - Buff colored concrete.

1220 F - Melted aluminum conduit and insulation lagging.

787 F - Melted galvanizing (exterior surfaces of burned cable trays).

500 F - This zone was estimated based upon proximity to other identifiable zones.

340 F - Blistered and peeled paint.

300 F - Paint softened, not blistered, sufficiently to allow soot to become embedded in the paint (approximated).

Many other temperature indicators were available but they did not contribute to the development of the zones as did the ones given above. In many cases they did confirm that temperatures did not exceed those temperatures obtained from the indicators actually used.

For some cases the data from the lower temperature indicators were enveloped by the higher temperature indicators, e.g., the ignition temperature of wood is overshadowed by the temperature of melted galvanizing when found in the same area.

The low temperatures, less than approximately 300 F, were found throughout the burn region, even in close proximity to zones of much higher temperatures. The entire region is characterized by zones or pockets of closely spaced high and low temperatures. No evidence of temperatures above the threshold of the blistered paint in reference 4.3 was found more than approximately 1 foot below the lowest cable tray.

The bases for establishing the zones are as follows:

1500 F zone - This zone is characterized by buff colored concrete on the ceiling and is located as shown in figure 1. The color interpretation was a judgment type decision but was substantiated by other observations also. One such observation was that within a distance of approximately 1 foot a considerable amount of aluminum conduit had melted (figure 7). The melting point of aluminum is known to be approximately 1220 F. Also the 1500 F zone is located approximately above both the greatest concentration of consumed material and the incoming supply of fresh air. Heat from the burning cables, fanned by the inrushing air to the lower pressure of the reactor building, rose in convection currents.

This rising heat was sufficient to melt the aluminum 1 foot from the ceiling. The melting of the aluminum conduit and subsequent burning of the insulated cables contained therein is considered to account for the 1500 F temperature of figure 1.

1220 F zone (figure 2) - This zone envelops all melted aluminum observed in the burn region. Except for highly congested regions containing large amounts of consumable insulating material, this zone is formed by a vertical projection of the burned cable trays and extends from the top tray to an elevation enveloping the uppermost signs of melted aluminum (figures 7, 8, and 9).

787 F zone (figure 3) - Essentially all cable trays containing burned cables showed signs of melted galvanizing (figures 7 through 11). This zone is assumed to be the volume containing all of the burned-out cable trays. Temperatures within the trays were probably much higher (figures 8 and 11) but this is of no interest since nothing within the trays is salvageable (references 4.4 and 4.5). In some areas the surfaces of the trays were also much higher and the galvanizing temperature greatly exceeded the melting point (figure 11). This too is of no importance since nothing in contact with the burned trays is salvageable either (references 4.4 and 4.5).

500 F zone (figure 4) - This zone appeared to be a somewhat stagnant pool of heat which was not directly over the burned trays. It is directly above a zone found to contain small amounts of blistered

and peeled paint, representing the 340 F zone described below. Some other unidentified and completely burned materials (probably rags) were found in this region which completely disintegrated upon touching them. The stagnation of this region was evidenced by these burned materials (one piece shown in figure 12) and by the total covering of everything in this region by a thick uniform layer of very fine soot. It was obvious that there had been very little or no lateral movement of air in this region since one could disturb a considerable quantity of soot with one's breath.

340 F zone (figure 5) - The predominant characteristic of this zone is blistered and peeled paint (figures 8, 9, and 10) which has not been included in a higher temperature zone. It essentially formed a buffer zone around the cable trays, outward and downward, a distance of 3 to 12 inches. One other zone was found, however, both of which are shown in figure 5. This zone appeared somewhat stagnant as did the 500 F zone which was directly above it.

300 F (figure 6) - Much of this zone is outside the temporary wall constructed of polyethylene film. It does not have well defined boundaries and the temperature was judged to be just under that for blistered paint. The primary characteristic indicator outside the temporary wall was paint which at some time during the fire had attained a temperature sufficient to soften it. The paint had then been exposed to a layer of soot which became entrapped to the extent that wire brushing could not separate the paint from the soot.

For other areas, indicators for this temperature were not readily determined and the boundaries were approximated based upon proximity to other better defined zones.

Figure 13 is a sketch showing the approximate relationship of the cable trays to the heat affected zone of the unit 1 reactor building and cable spreading room. Figures 14 through 17 are photographs, oriented to figure 13, which show some of the effects of the temperature in the vicinity of the cable trays.

7.0 LIMITATIONS

No attempt was made to determine temperatures at any lesser increments than the ones shown herein. These ranges are considered adequate for assessing possible damage to the materials contained within the region. No effort has been expended to determine temperatures below approximately 300 F since no temperature damage should have resulted from such a low temperature.

Cases have been found where heat was communicated through conduit for an unexpected distance beyond the major heat source. These locations are enveloped by the vertical portion of the 300 zone adjacent to the "p" line between the R4 and R5 column lines.

The temperature indicators were not as abundant for the 300 F zone, and some liberties were taken to extend it to account for uncertainties. The temperature zones shown in figures 1 through 6 are based upon the evidence found and have not been arbitrarily extended to provide additional conservatism. The data is presented in this manner to preclude subsequent stacking of conservatisms by users of the data. The numerical

identification of temperature zones to three significant digits is not to be taken as an indication of that degree of accuracy; rather, to correlate them to the basic values used for the indicators.

It should be noted that the temperatures approximated herein are the probable air and surface temperatures of the respective zones. Mitigating circumstances may be found which may justify lower surface temperatures than those shown.

One example of this is a water-filled pipe. The heat sink available in a line filled with water may be taken into consideration in subsequent evaluations as having a limiting effect on the maximum temperature attained.

Another influence which could be deceiving is the time and temperature relationship. Time exposure to one temperature may produce a similar effect to that of a much higher temperature for a lesser period of time. This phenomenon is suspected to have been present in the stagnant regions mentioned herein, particularly that shown as the 500 F zone and portions of the 300 F. No attempt was made, however, to interpret this in any light other than simply as an elevated temperature effect. For the items to be evaluated for possible reuse, this should be a conservative approach.

8.0 CONCLUSIONS AND RECOMMENDATIONS

These data have been assembled from direct evidence obtained at the site of the fire. Independent verification of the zones, using the same indicators as given herein, was accomplished by personnel not involved in the collection of the data and construction of the

temperature zones. Good correlation was found. Consequently, the data is believed to be an acceptable approximation of the temperature zones which existed sometime during the cable fire. As such, these zones should be used in all subsequent temperature related evaluations.

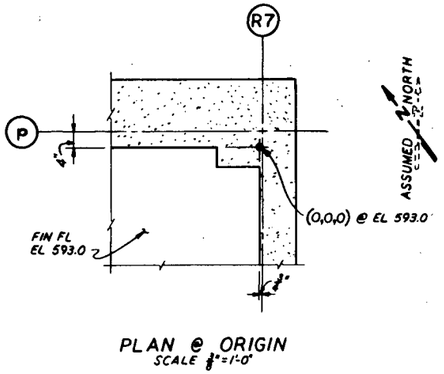

PLAN @ ORIGIN
SCALE 3/8" = 1'-0"

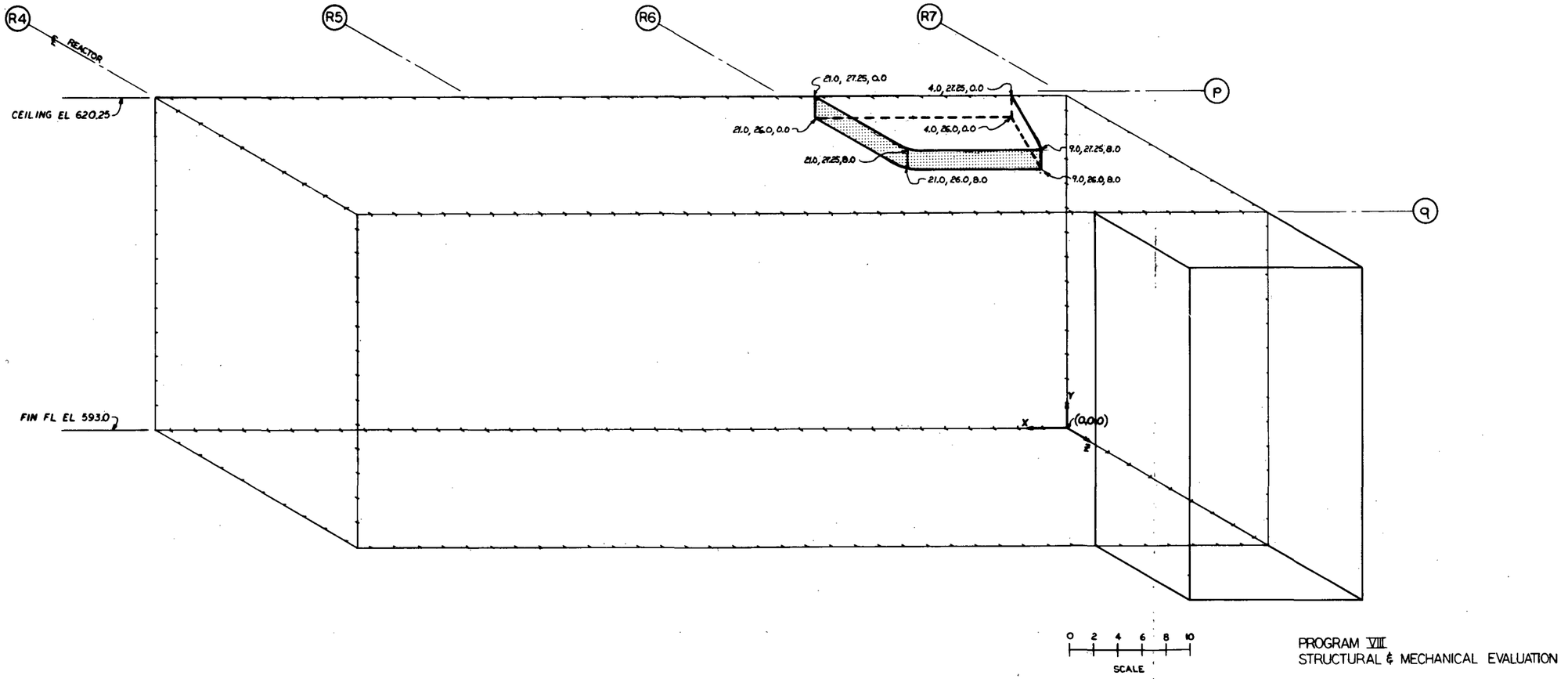

PROGRAM VIII
STRUCTURAL & MECHANICAL EVALUATION

FIGURE 1

ESTIMATED TEMPERATURE ZONES - 1500 F

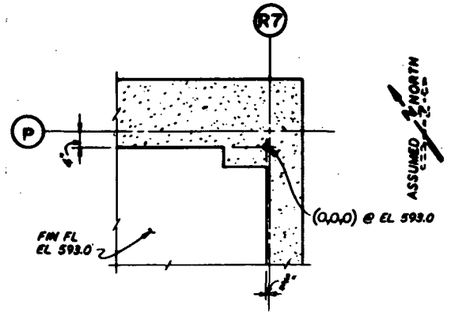

PLAN @ ORIGIN
SCALE $\frac{1}{8}$"=1'-0"

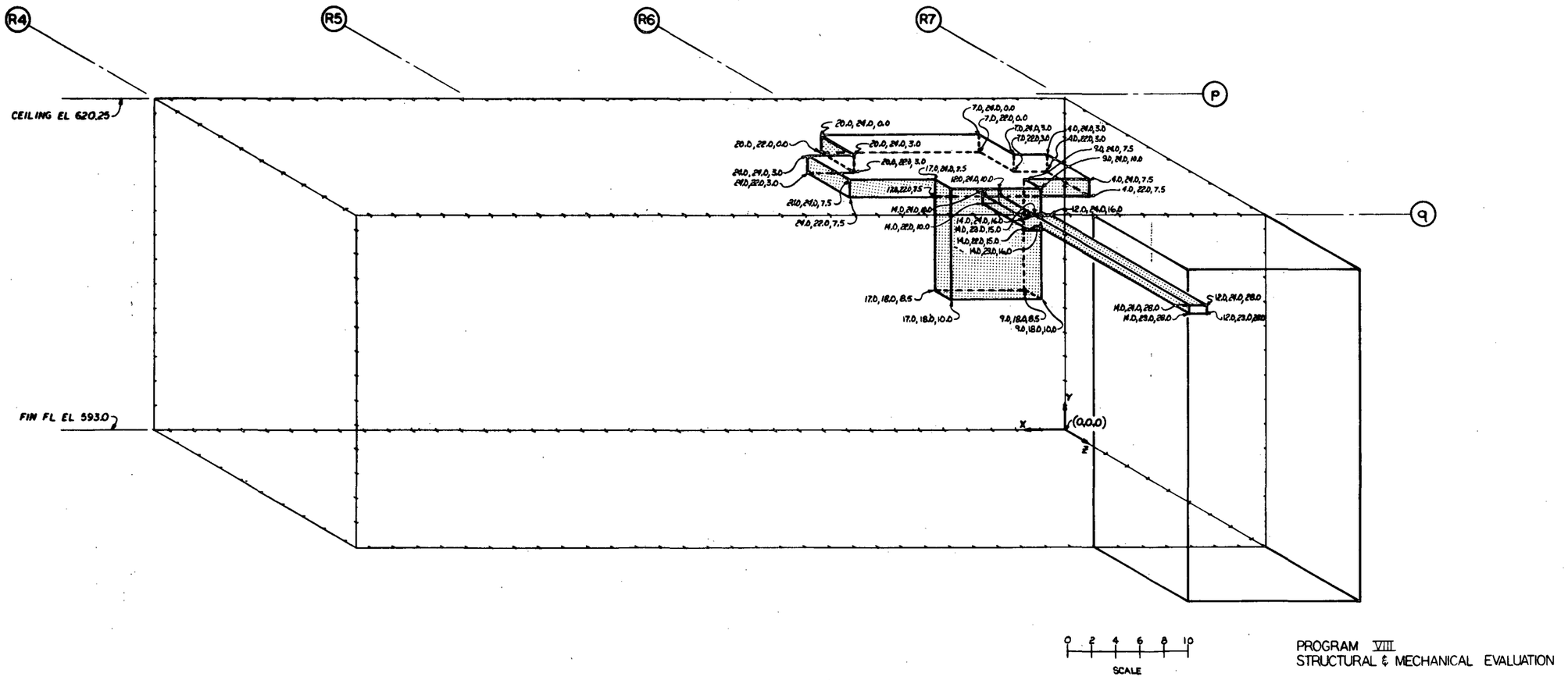

PROGRAM VIII
STRUCTURAL & MECHANICAL EVALUATION

FIGURE 2

ESTIMATED TEMPERATURE ZONES - 1220 F

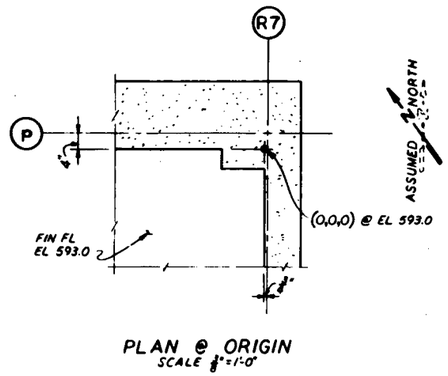

PLAN @ ORIGIN
SCALE 1/8"=1'-0"

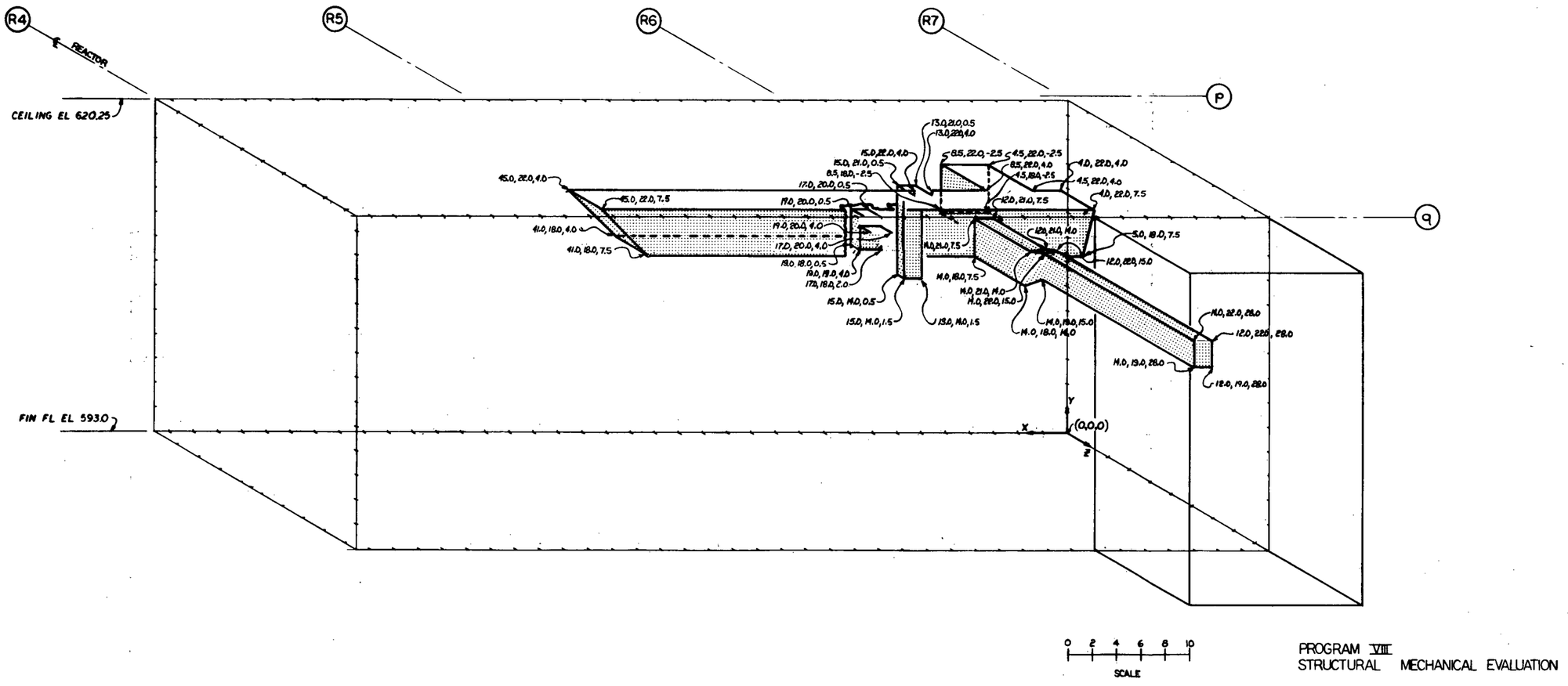

PROGRAM VIII
STRUCTURAL MECHANICAL EVALUATION

FIGURE 3

ESTIMATED TEMPERATURE ZONES - 787 F

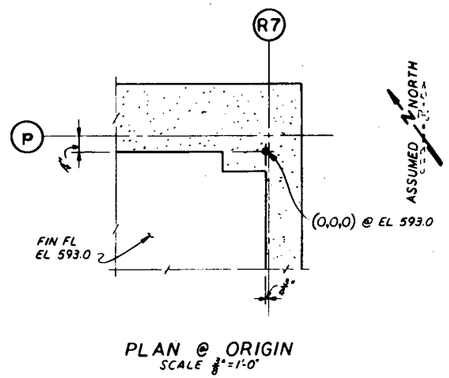

PLAN @ ORIGIN
SCALE $\frac{3}{8}$" = 1'-0"

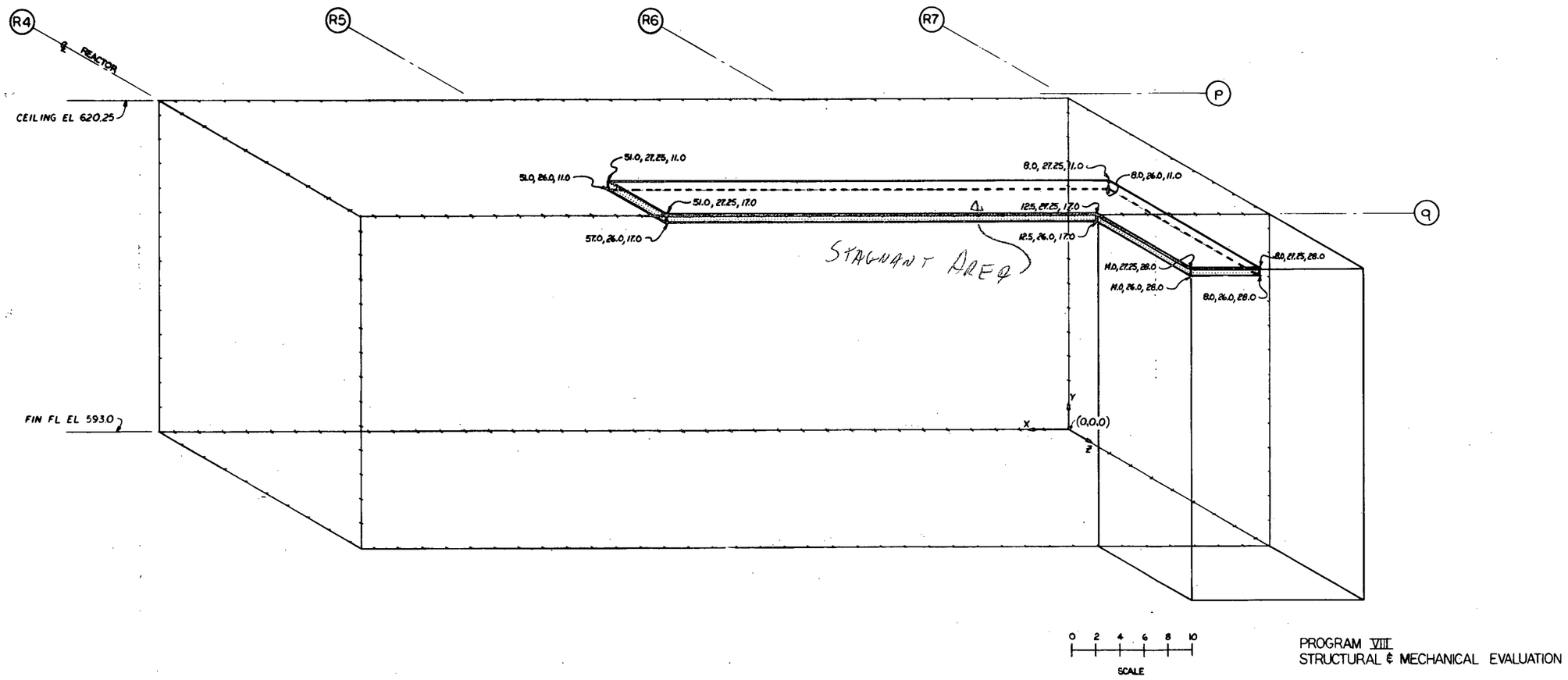

PROGRAM VIII
STRUCTURAL & MECHANICAL EVALUATION

FIGURE 4

ESTIMATED TEMPERATURE ZONES - 500 F

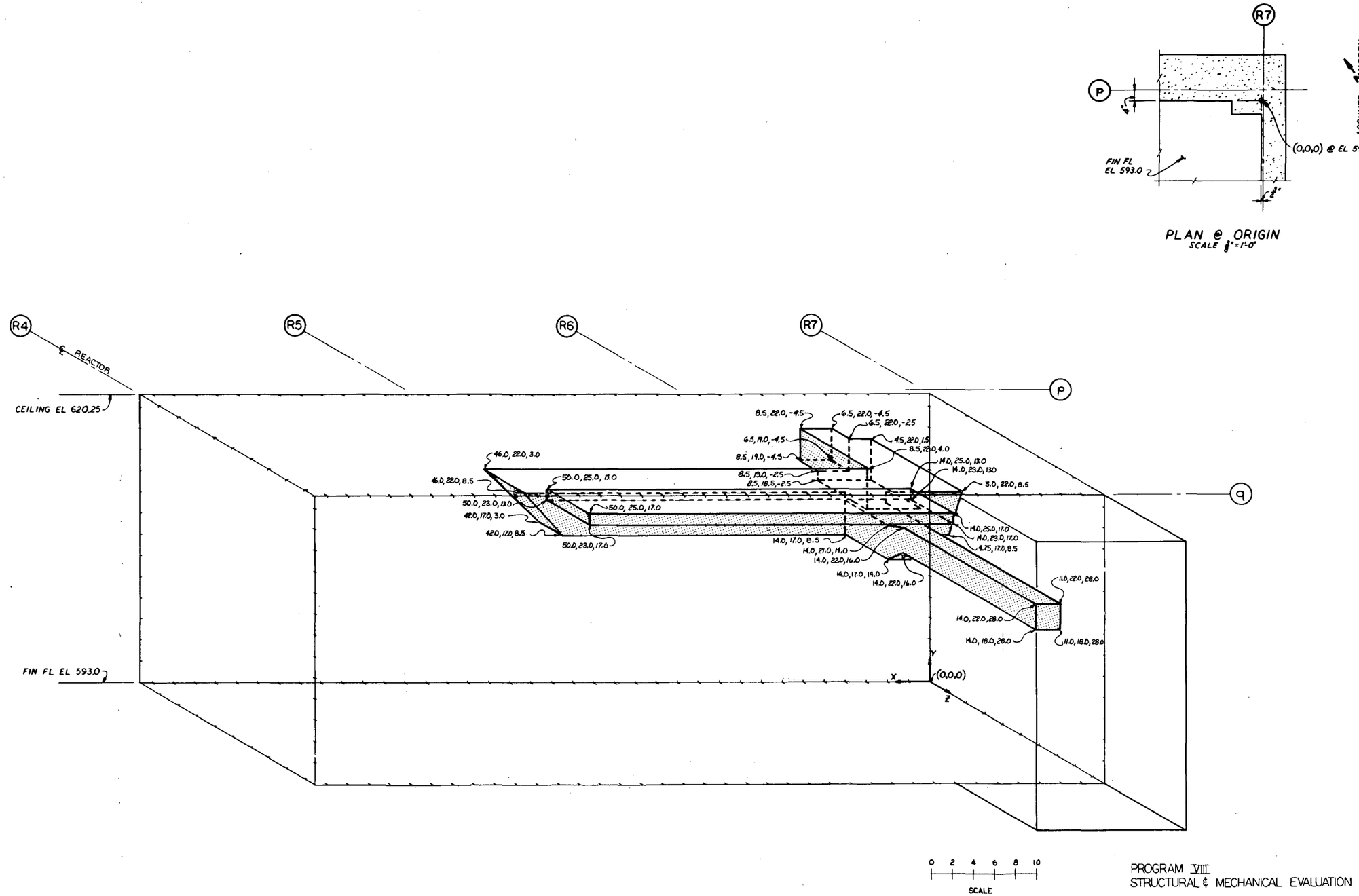

FIGURE 5

ESTIMATED TEMPERATURE ZONES - 340 F

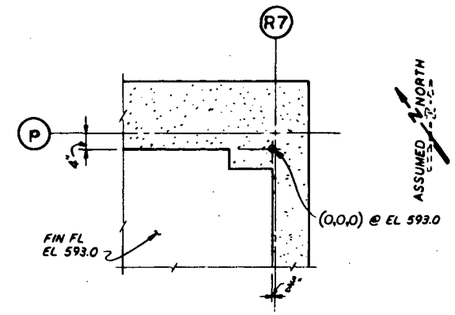

PLAN @ ORIGIN
SCALE 3/8"=1'-0"

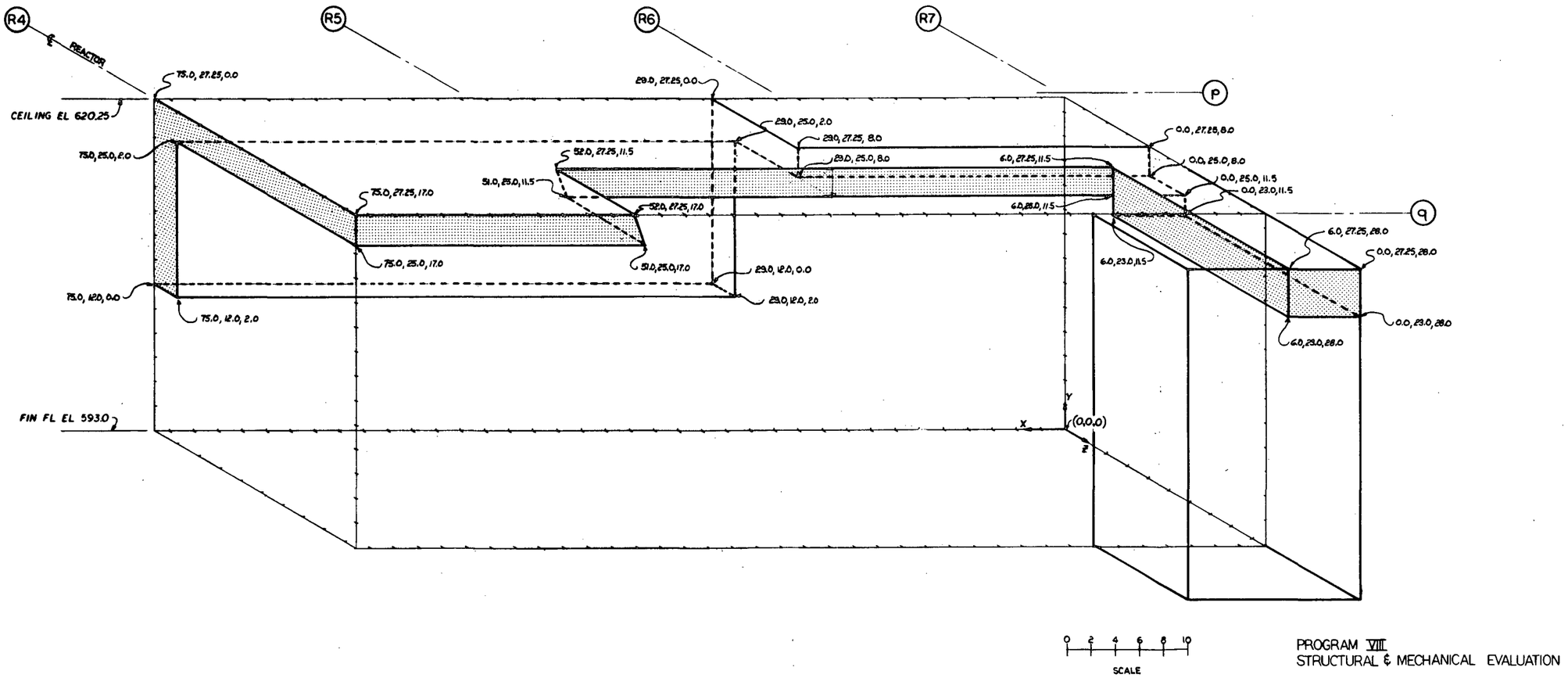

PROGRAM VIII
STRUCTURAL & MECHANICAL EVALUATION

FIGURE 6

ESTIMATED TEMPERATURE ZONES - 300 F

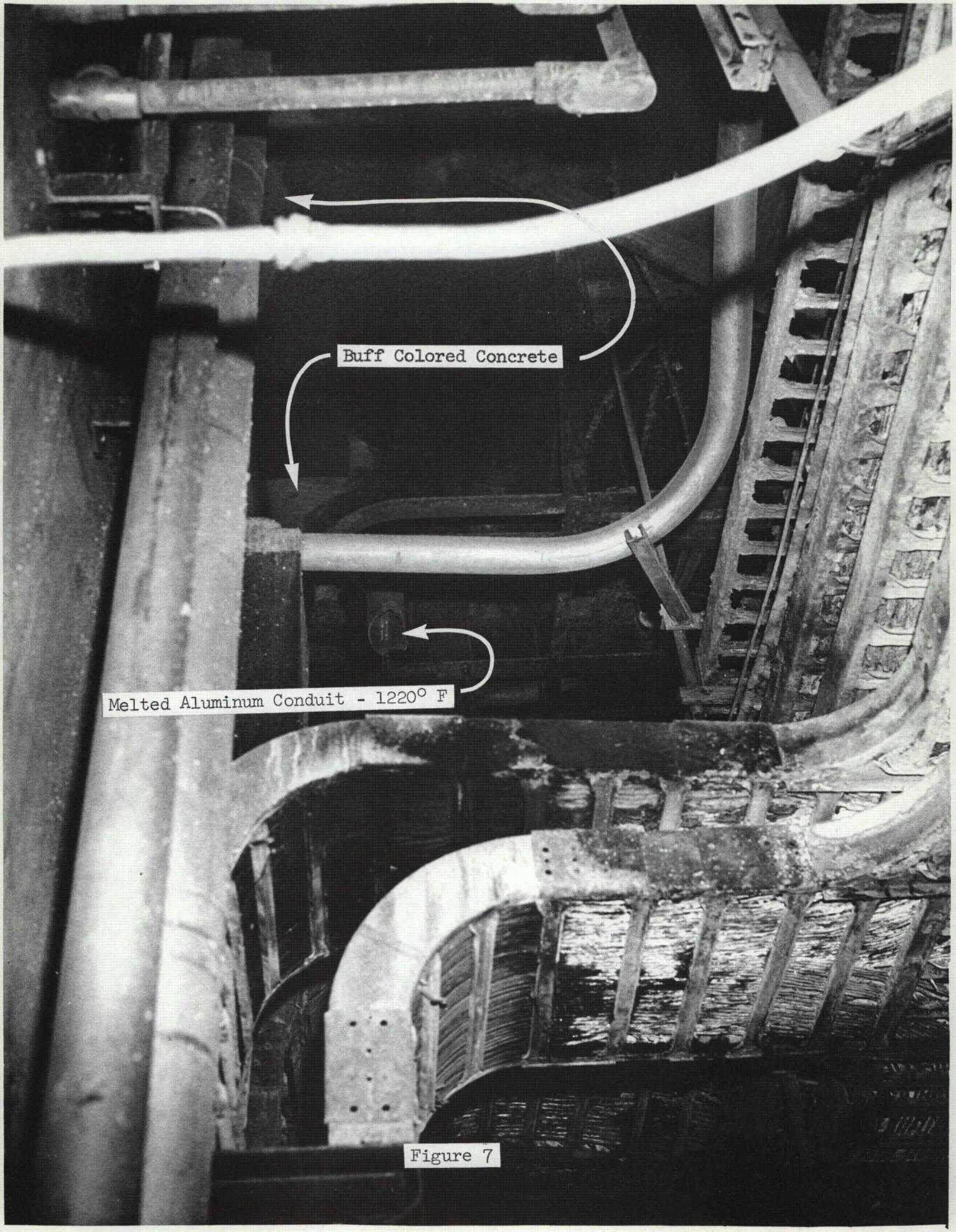

Figure 7

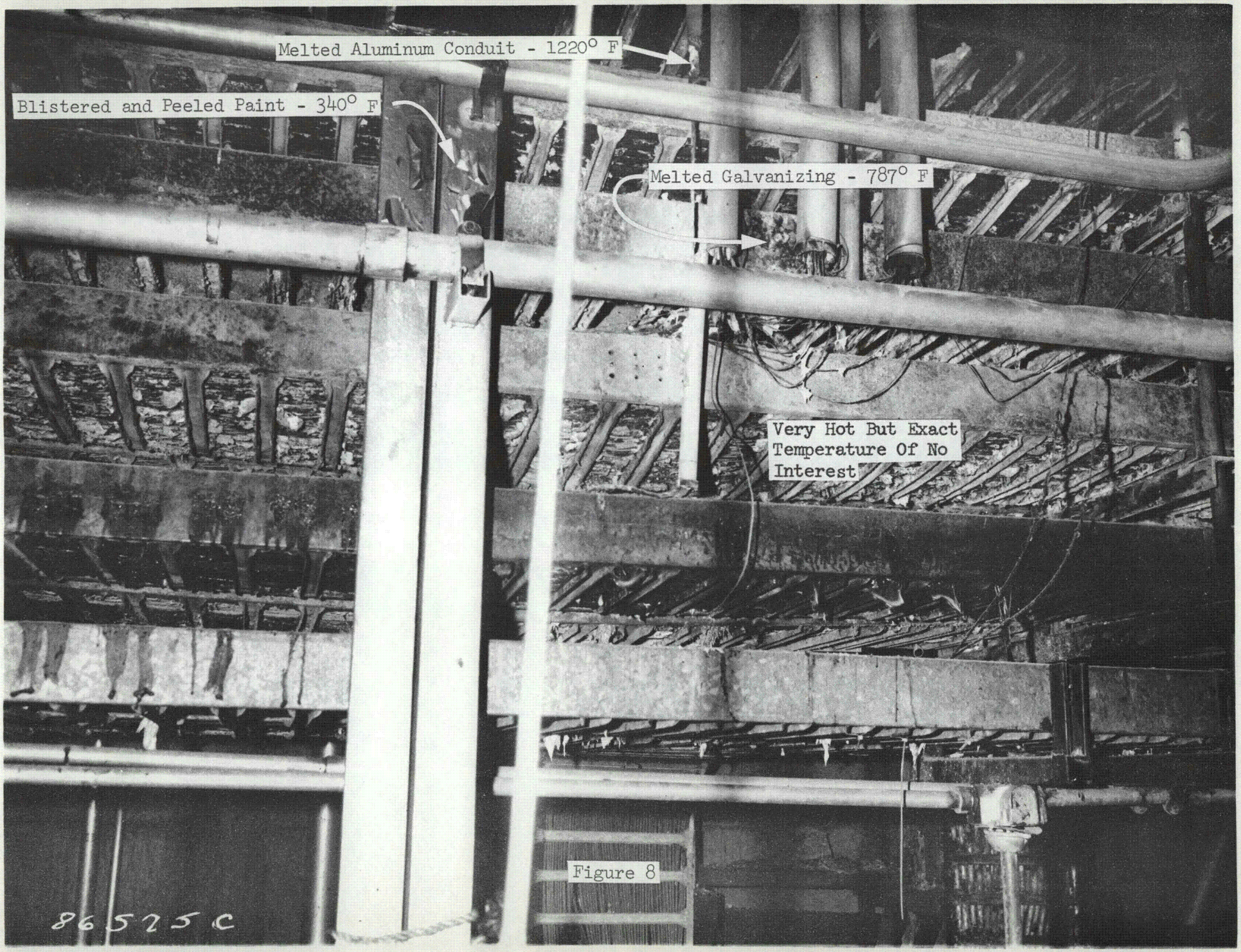
Melted Aluminum Conduit - 1220° F
Blistered and Peeled Paint - 340° F
Melted Galvanizing - 787° F
Very Hot But Exact Temperature Of No Interest
86575C

Figure 8

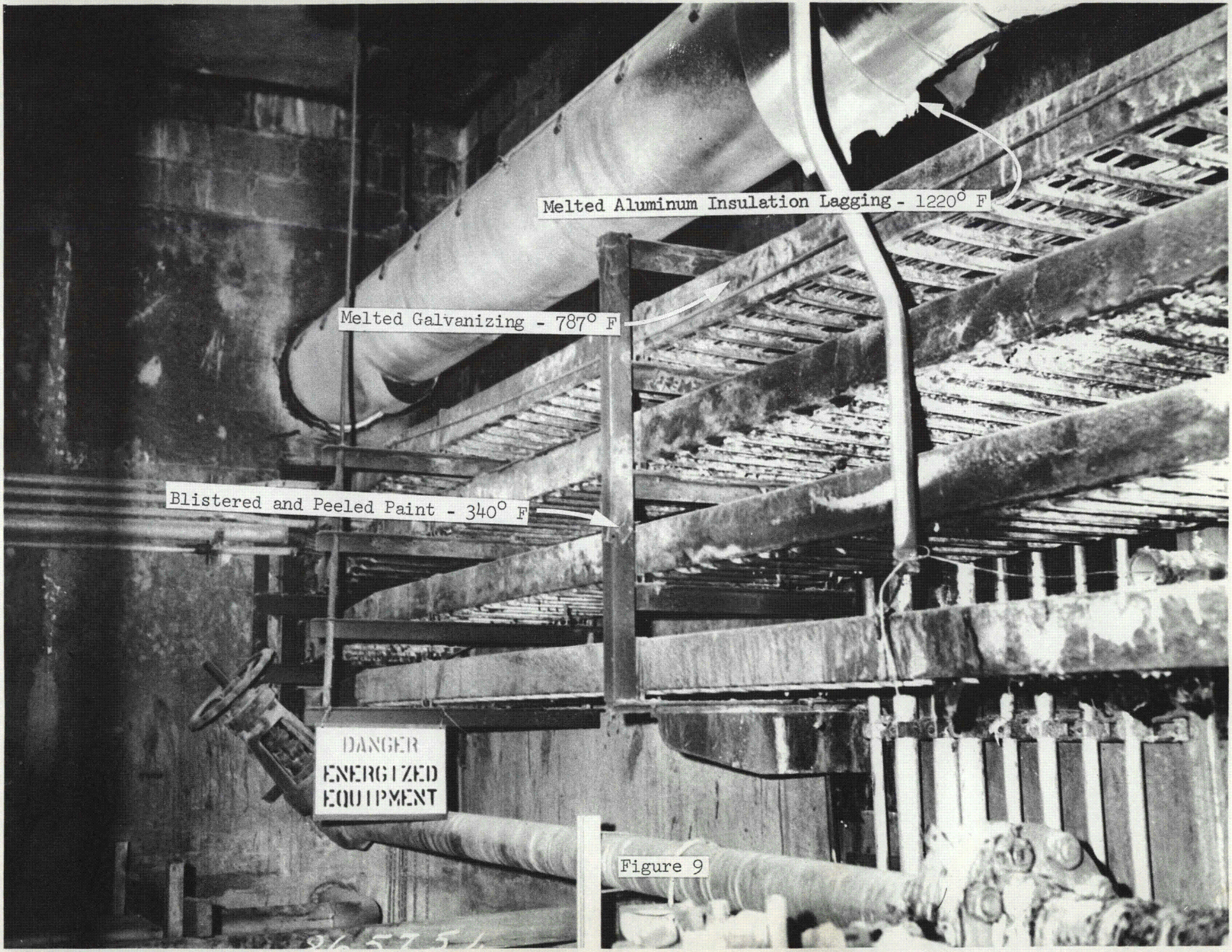
Melted Aluminum Insulation Lagging - 1220° F
Melted Galvanizing - 787° F
Blistered and Peeled Paint - 340° F
DANGER
ENERGIZED
EQUIPMENT

Figure 9

Melted Galvanizing - 787° F
Blistered and Peeled Paint - 340° F
TK
No Paint Damage < 340° F
86575 G

Figure 10

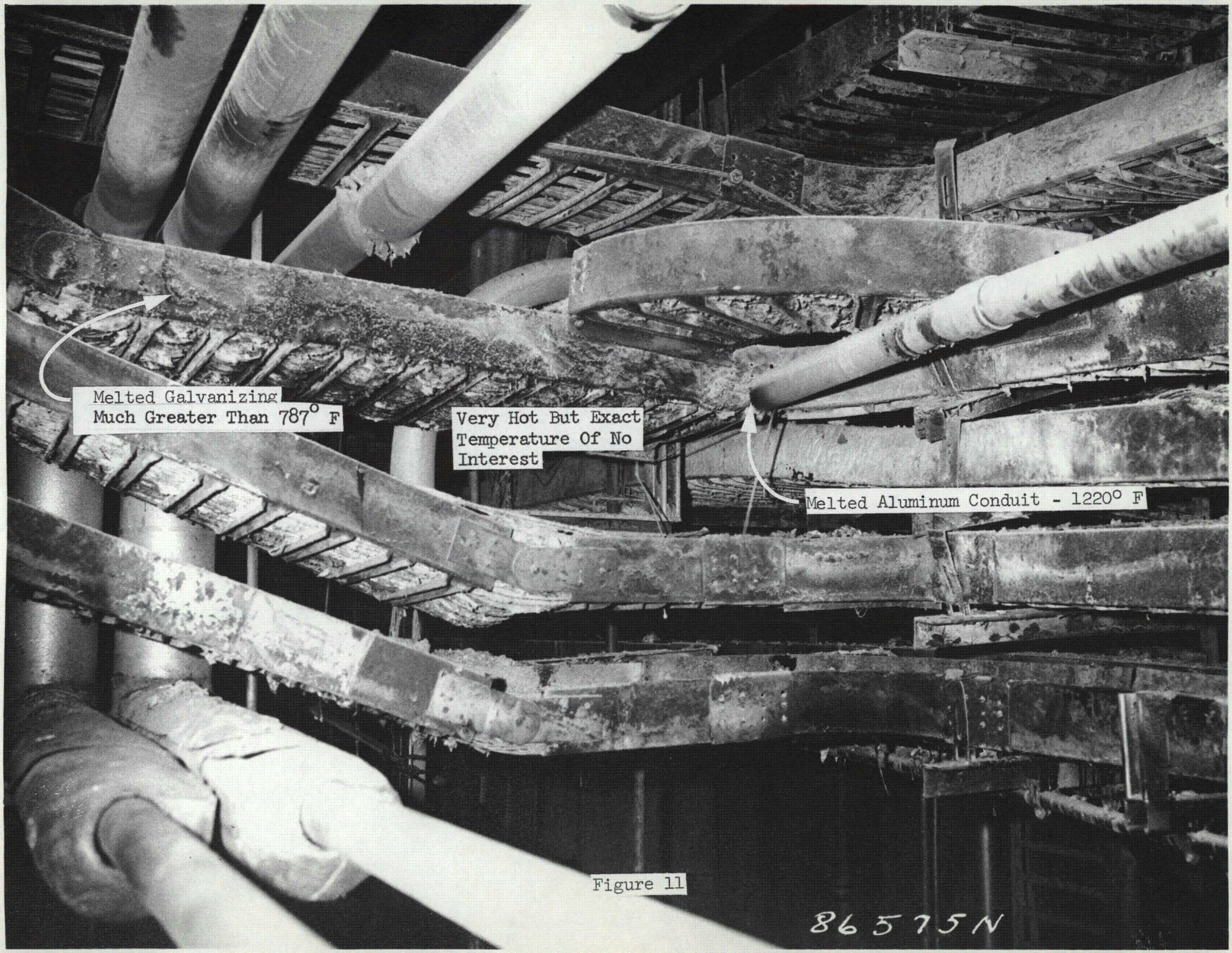
Melted Galvanizing
Much Greater Than 787° F
Very Hot But Exact
Temperature Of No
Interest
Melted Aluminum Conduit - 1220° F
86575N

Figure 11

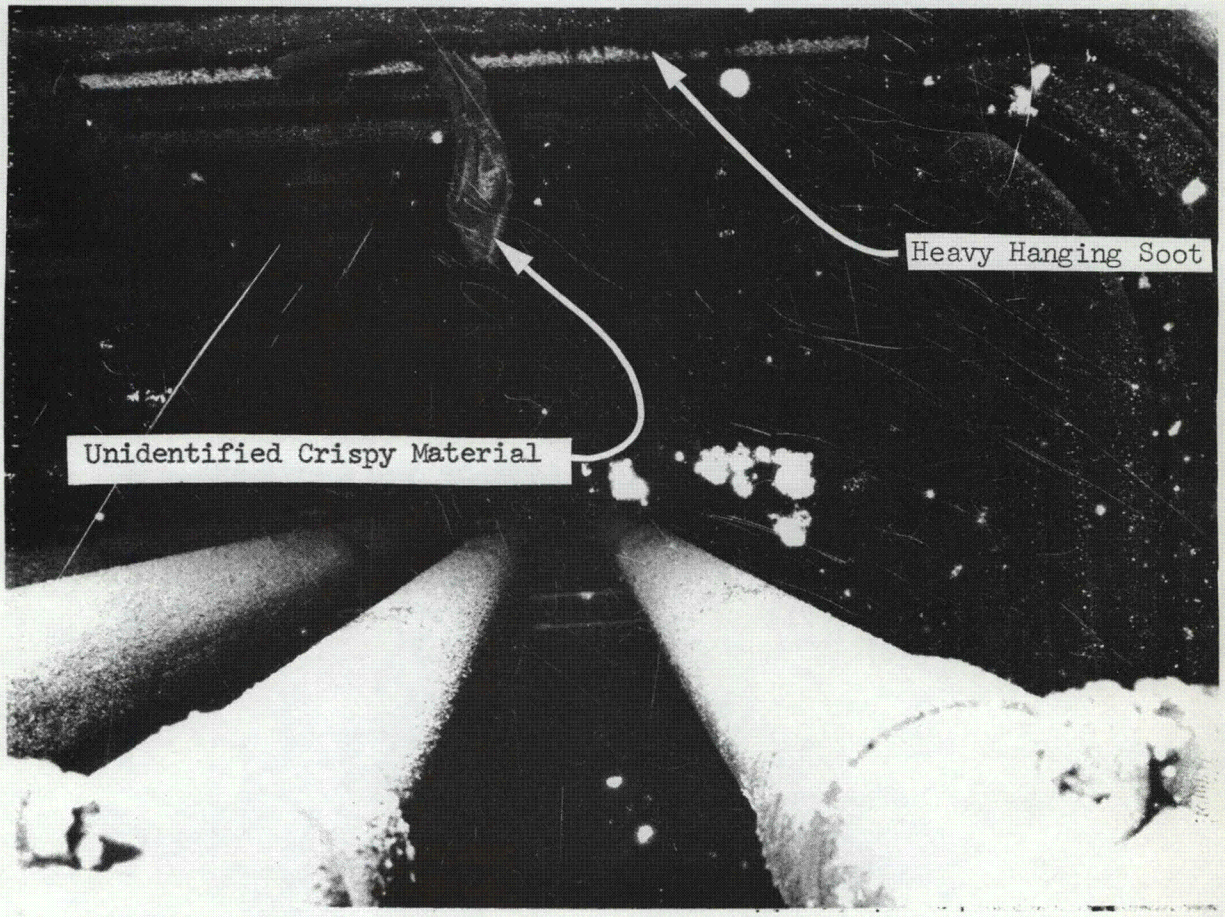

Figure 12

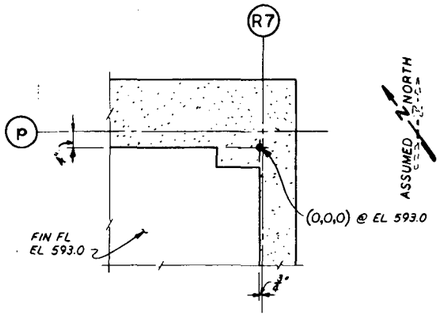

PLAN @ ORIGIN
SCALE $\frac{3}{8}$"=1'-0"

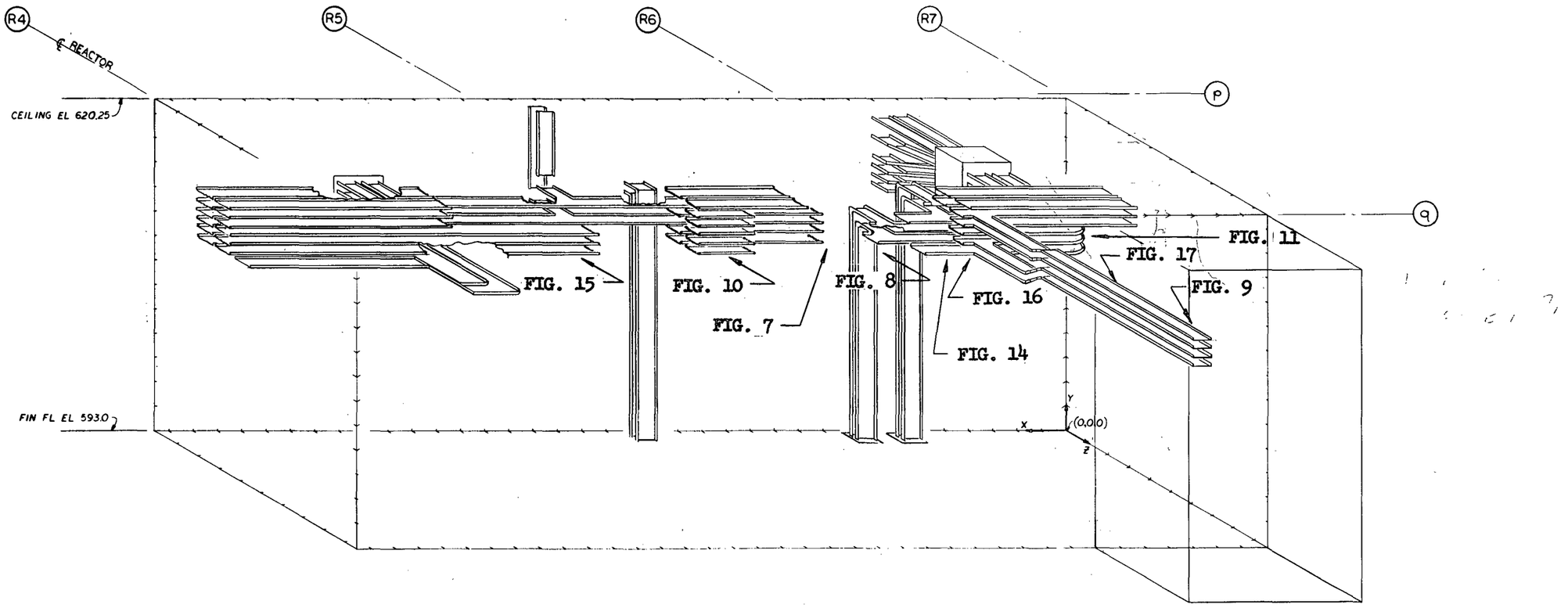

PROGRAM VIII
STRUCTURAL & MECHANICAL EVALUATION

FIGURE 13

CABLE TRAYS

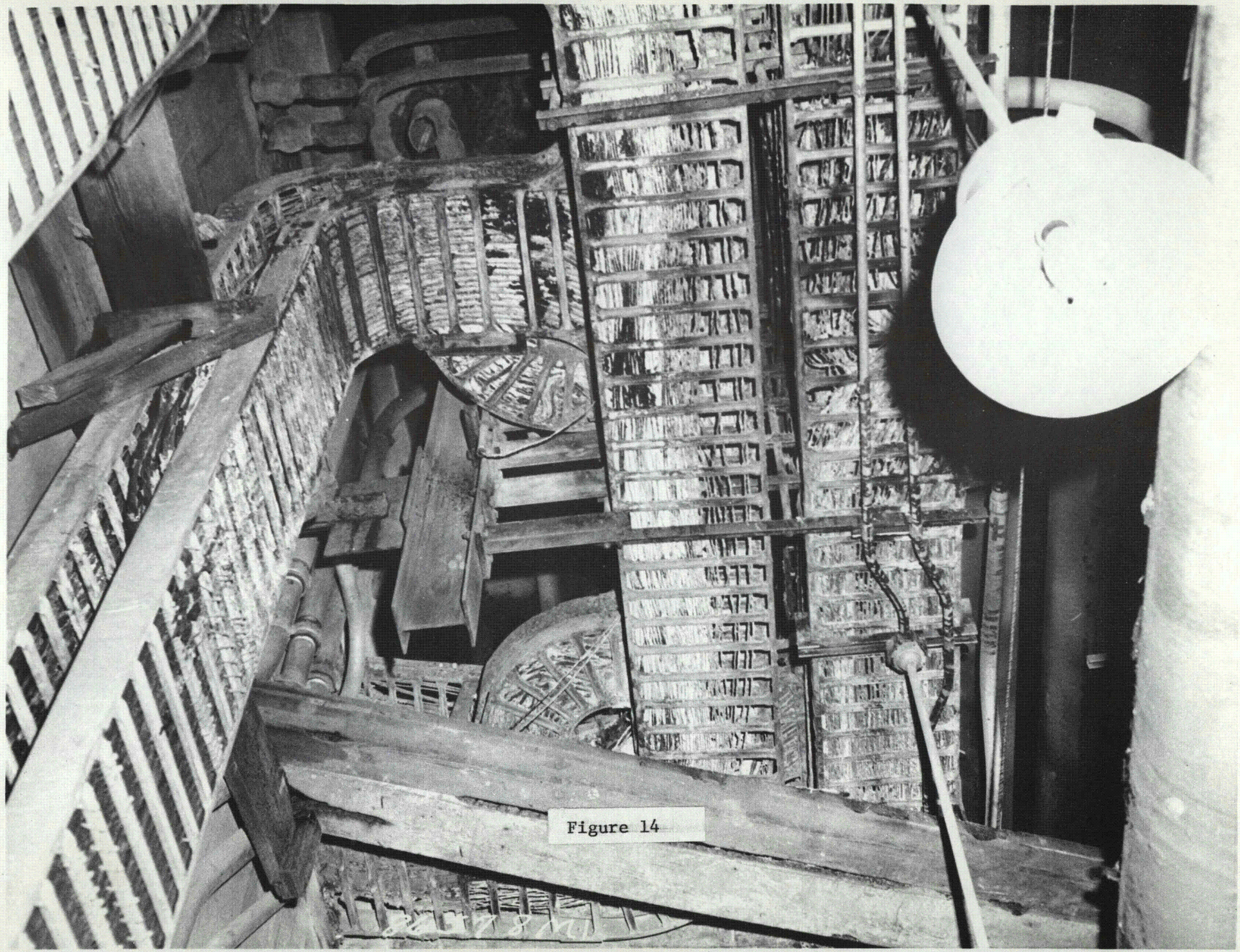

Figure 14

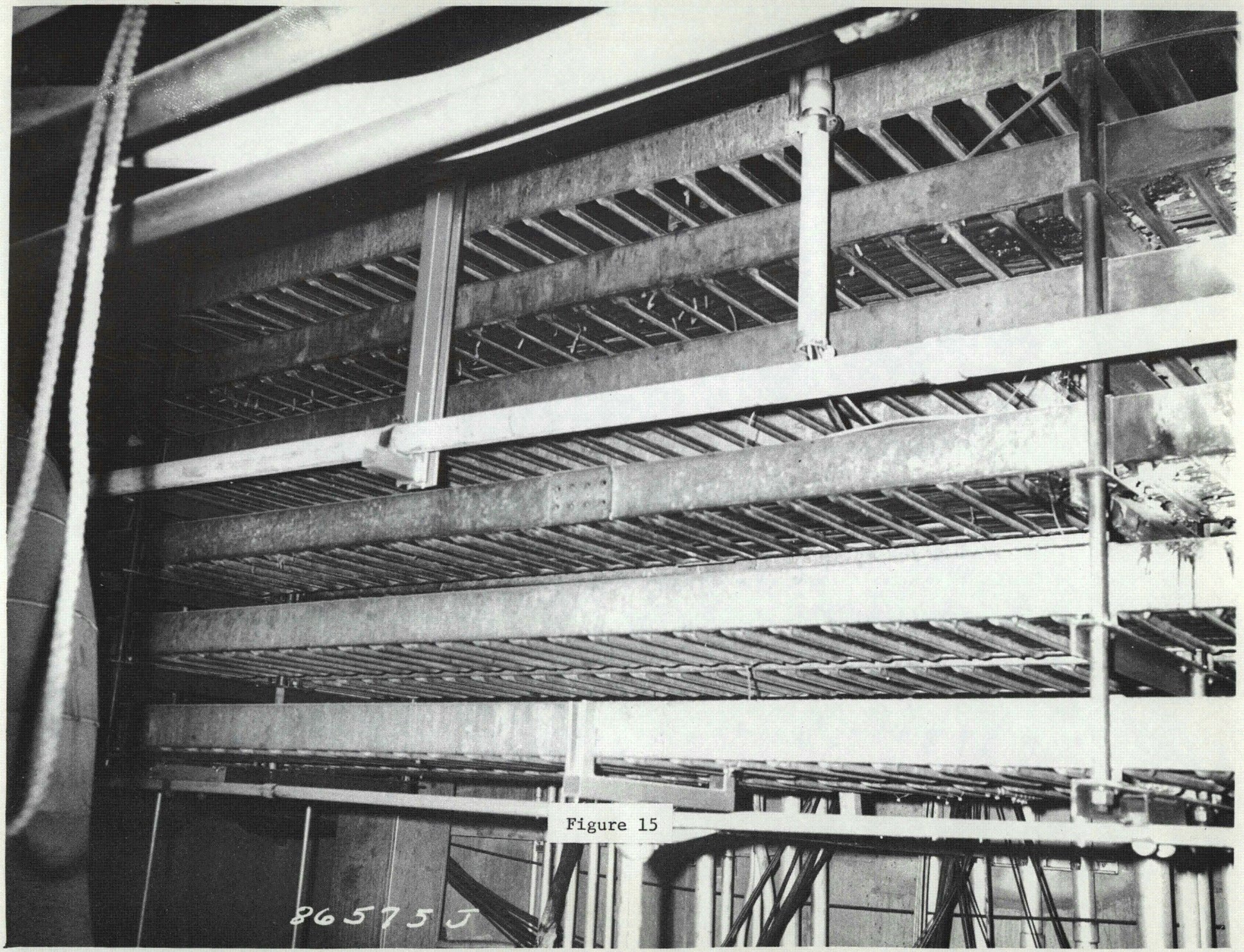

Figure 15

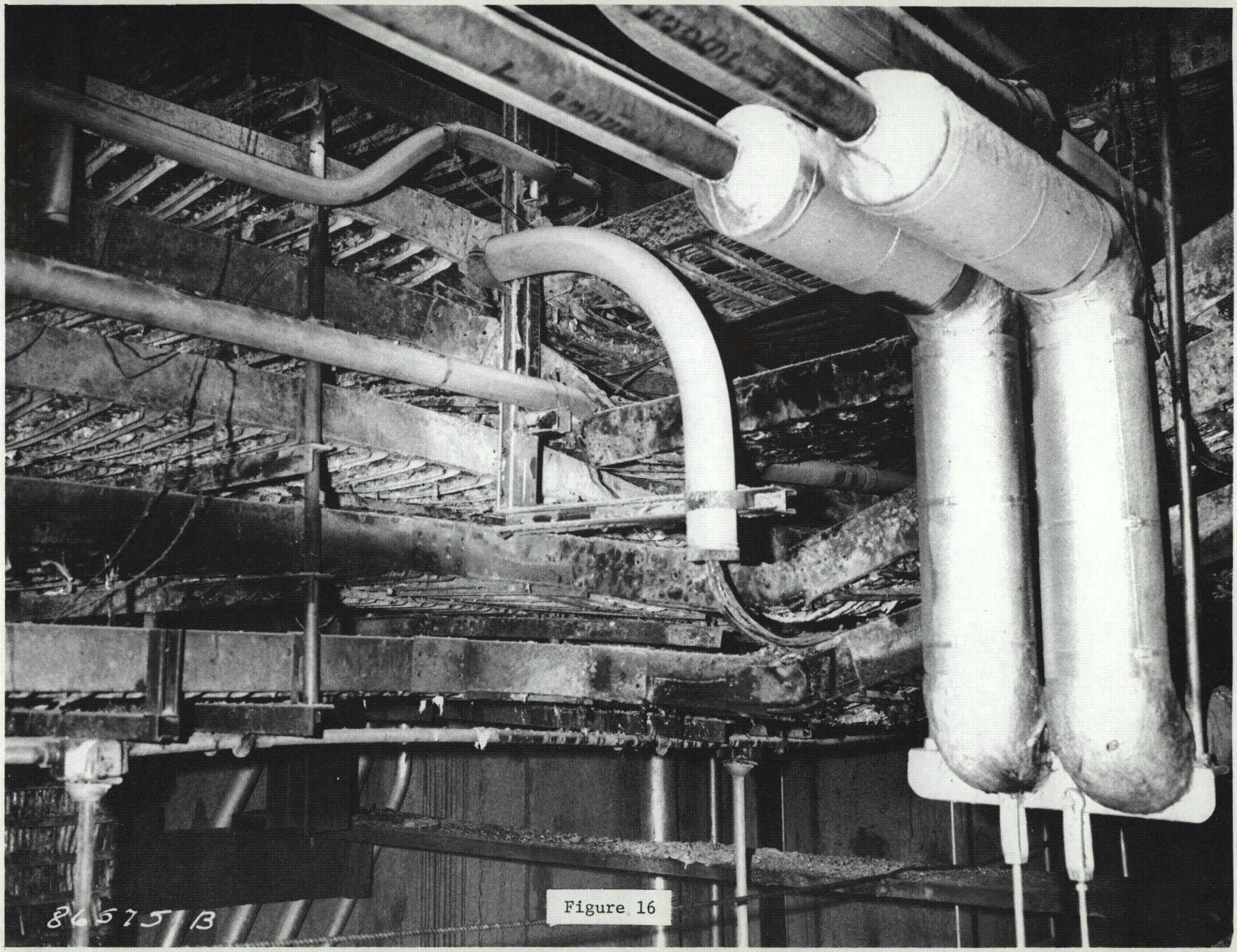

Figure 16

Figure 17