TOPIC: 191001
KNOWLEDGE: K1.01 [3.3/3.4]
QID: P901

Which one of the following describes the function of a safety valve?

A. Provide overpressure protection to limit the internal pressure in vessels.

B. Control pressure in a system to maintain optimum operational conditions.

C. Sound a warning by lifting at a predetermined value slightly higher than operating pressure.

D. Modulate open as necessary to maintain system pressure and/or temperature within normal limits.

ANSWER: A.

TOPIC: 191001
KNOWLEDGE: K1.01 [3.3/3.4]
QID: P1802 (B1701)

A vertical safety valve has a compressed spring assembly that is applying 1,200 lbf to the top of the valve disk in opposition to system pressure. System pressure is being exerted on the underside of the valve disk that is 3 inches in diameter.

Which one of the following is the approximate system pressure at which the safety valve will open?

A. 44 psig

B. 64 psig

C. 128 psig

D. 170 psig

ANSWER: D.

TOPIC: 191001
KNOWLEDGE: K1.01 [3.3/3.4]
QID: P1903 (B2003)

A vertical safety valve with a 3-inch diameter disk has a spring applying 1,000 lbf to the top of the valve disk in opposition to system pressure. Which one of the following is the approximate system pressure at which the safety valve will begin to open?

A. 35 psig

B. 111 psig

C. 141 psig

D. 444 psig

ANSWER: C.

TOPIC: 191001
KNOWLEDGE: K1.01 [3.3/3.4]
QID: P2101 (B2103)

Refer to the drawing of a typical safety valve (see figure below).

The component indicated by the solid arrow is used when necessary to manually...

A. ratchet open the safety valve.

B. pop open the safety valve.

C. gag shut the safety valve.

D. determine the position of the safety valve.

ANSWER: B.

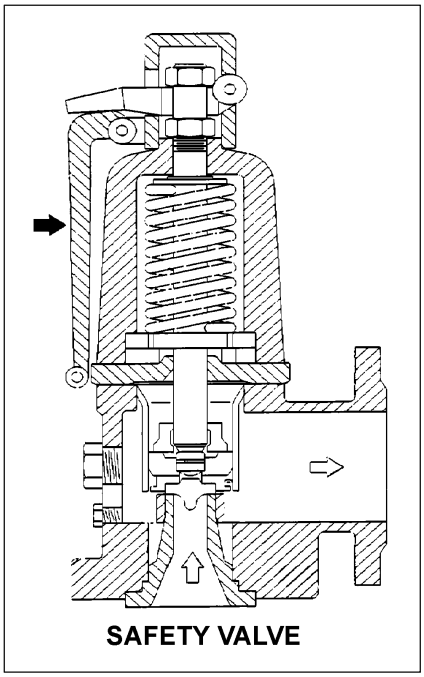

TOPIC: 191001
KNOWLEDGE: K1.01 [3.3/3.4]
QID: P2301 (B2301)

A vertical safety valve has a compressed spring assembly that is applying 2,500 lbf to the top of the valve disk in opposition to system pressure. System pressure is being exerted on the underside of the valve disk that is 5 inches in diameter.

Which one of the following is the approximate system pressure at which the safety valve will open?

A. 32 psig

B. 127 psig

C. 159 psig

D. 500 psig

ANSWER: B.

TOPIC: 191001
KNOWLEDGE: K1.01 [3.3/3.4]
QID: P2801 (B2803)

A vertical safety valve with a 2-inch diameter disk has a compressed spring applying 2,400 lbf to the top of the valve disk in opposition to system pressure. Which one of the following is the approximate system pressure at which the safety valve will open?

A. 95 psig

B. 191 psig

C. 382 psig

D. 764 psig

ANSWER: D.

TOPIC: 191001
KNOWLEDGE: K1.01 [3.3/3.4]
QID: P3401 (B3401)

Given the following pressure specifications for operation of a main steam safety valve (MSSV):

Setpoint pressure (MSSV starts to open) = 1,200 psia
Maximum pressure (MSSV will be fully open) = 1,230 psia
Reseat pressure (MSSV will be fully closed) = 1,140 psia

Which one of the following is the percent blowdown for the MSSV?

A. 2.5 percent

B. 5.0 percent

C. 7.5 percent

D. 10.0 percent

ANSWER: B.

TOPIC: 191001
KNOWLEDGE: K1.01 [3.3/3.4]
K1.02 [3.0/3.3]
QID: P4201 (B4201)

A completely full water storage tank is being hydrostatically tested to 100 psig using a positive displacement pump (PDP) with a smooth and constant discharge flow rate of 10 gpm. The tank is protected by a safety valve <u>and</u> a relief valve; both valves discharge to the atmosphere. Each valve has an opening setpoint of 105 psig and a maximum rated discharge flow rate of 6 gpm. The PDP is inadvertently left running when tank pressure reaches 100 psig.

With the PDP still running, tank pressure will stabilize _____ 105 psig; and the greater mass flow rate will be coming from the _____ valve.

A. at; safety

B. above; safety

C. at; relief

D. above; relief

ANSWER: B.

TOPIC: 191001
KNOWLEDGE: K1.01 [3.3/3.4]
QID: P4401 (B4401)

Given the following pressure specifications for a safety relief valve (SRV):

Setpoint pressure (SRV will start to open) = 1,200 psia
Maximum pressure (SRV will be fully open) = 1,242 psia
Reseat pressure (SRV will be fully closed) = 1,152 psia

Which one of the following is the percent accumulation for the SRV?

A. 2.5 percent

B. 3.0 percent

C. 3.5 percent

D. 4.0 percent

ANSWER: C.

TOPIC: 191001
KNOWLEDGE: K1.01 [3.3/3.4]
K1.02 [3.0/3.3]
QID: P4701 (B4701)

A completely full water storage tank is being hydrostatically tested to 200 psig using a positive displacement pump (PDP) with a smooth and constant discharge flow rate of 8 gpm. The tank is protected by a relief valve <u>and</u> a safety valve; both valves discharge to the atmosphere. Each valve has an opening setpoint of 205 psig and a maximum rated discharge flow rate of 6 gpm. The PDP is inadvertently left running when tank pressure reaches 200 psig.

When conditions stabilize with the PDP still running, the relief valve will be _____ open; and the safety valve will be discharging a flow rate of approximately _____ to the atmosphere.

A. partially; 6 gpm

B. partially; 2 gpm

C. fully; 6 gpm

D. fully; 2 gpm

ANSWER: A.

TOPIC: 191001
KNOWLEDGE: K1.01 [3.3/3.4]
K1.02 [3.0/3.3]
QID: P5201 (B5201)

Refer to the drawing of two identical water storage tanks (see figure below). Tank A is protected by a relief valve and Tank B is protected by a safety valve. Each valve has an opening setpoint of 205 psig and a maximum rated discharge flow rate of 8 gpm.

The tanks are being hydrostatically tested to 200 psig. Each tank is being supplied with a smooth and constant flow rate of 2 gpm from separate positive displacement pumps (PDPs). Both PDPs are inadvertently left running when tank pressures reach 200 psig.

With the PDPs running continuously, what will be the resulting status of the relief and safety valves?

	Relief Valve Status	Safety Valve Status
A.	Partially open	Partially open
B.	Partially open	Cycling between fully open and fully closed
C.	Cycling between fully open and fully closed	Partially open
D.	Cycling between fully open and fully closed	Cycling between fully open and fully closed

ANSWER: B.

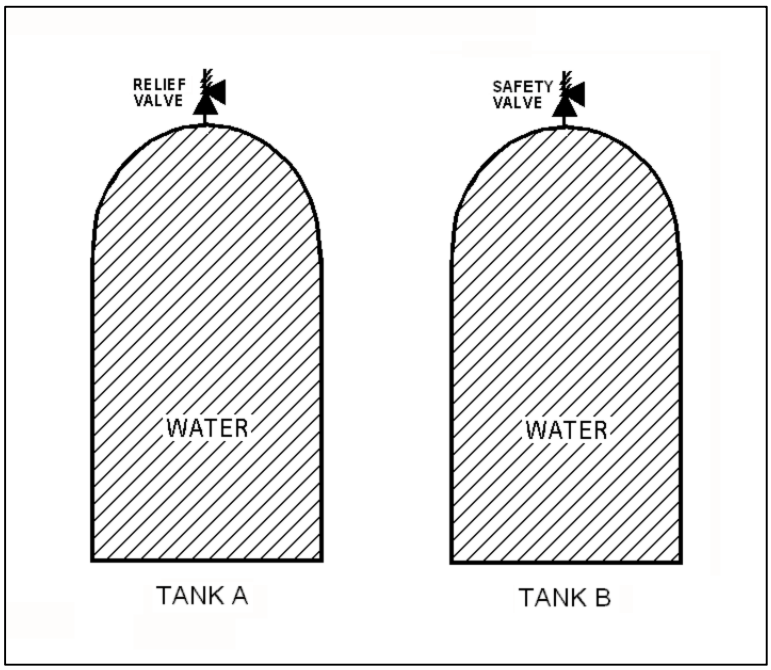

TOPIC: 191001
KNOWLEDGE: K1.01 [3.3/3.4]
K1.02 [3.0/3.3]
QID: P6101 (B6101)

A completely full water storage tank is being hydrostatically tested to 200 psig using a positive displacement pump (PDP) with a smooth and constant discharge flow rate of 8 gpm. The tank is protected by a relief valve and a safety valve that both discharge to the atmosphere. The valves have the following characteristics:

- The relief valve opening setpoint is 200 psig with an accumulation of 5 percent.
- The safety valve opening setpoint is 240 psig with a blowdown of 5 percent.
- Both valves have a maximum discharge flow rate of 6 gpm.

The PDP is inadvertently left running when tank pressure reaches 200 psig.

When conditions stabilize with the PDP still running, the relief valve will be _____ open; and the safety valve will be discharging a flow rate of approximately _____ to the atmosphere.

A. partially; 6 gpm

B. partially; 2 gpm

C. fully; 6 gpm

D. fully; 2 gpm

ANSWER: D.

TOPIC: 191001
KNOWLEDGE: K1.01 [3.3/3.4]
K1.02 [3.0/3.3]
QID: P6201 (B6201)

A main steam system uses a combination of safety and relief valves for overpressure protection. Which one of the following describes a major design consideration for installing both types of valves in the same system?

A. The safety valves are installed to prevent chattering of the relief valves during normal power operation.

B. The safety valves are installed to prevent unnecessary opening of the relief valves during a steam pressure transient.

C. The relief valves are installed to prevent chattering of the safety valves during normal power operation.

D. The relief valves are installed to prevent unnecessary opening of the safety valves during a steam pressure transient.

ANSWER: D.

TOPIC: 191001
KNOWLEDGE: K1.01 [3.3/3.4]
K1.02 [3.0/3.3]
QID: P7671 (B7671)

A completely full water storage tank is being hydrostatically tested to 200 psig using a positive displacement pump (PDP) with a smooth and constant discharge flow rate of 8 gpm. The tank is protected by a relief valve and a safety valve that both discharge to the atmosphere. The valves have the following characteristics:

- The relief valve opening setpoint is 220 psig with an accumulation of 5 percent.
- The safety valve opening setpoint is 260 psig with a blowdown of 5 percent.
- Both valves have a maximum discharge flow rate of 6 gpm.

The PDP is inadvertently left running when tank pressure reaches 200 psig.

After a few minutes with the PDP still running, the relief valve will be discharging a flow rate of approximately _____; and the safety valve will be _____.

A. 2 gpm; partially open

B. 6 gpm; partially open

C. 2 gpm; cycling between fully open and fully closed

D. 6 gpm; cycling between fully open and fully closed

ANSWER: D.

TOPIC: 191001
KNOWLEDGE: K1.02 [3.3/3.4]
QID: P1

The primary purpose of a pressure relief valve is to...

A. reduce system energy.

B. reduce system pressure.

C. maintain system integrity.

D. maintain system mass.

ANSWER: C.

TOPIC: 191001
KNOWLEDGE: K1.02 [3.0/3.3]
QID: P202 (B301)

The difference between the setpoint pressure at which a safety valve opens and the pressure at which it closes is called...

A. blowdown.

B. accumulation.

C. setpoint tolerance.

D. setpoint deviation.

ANSWER: A.

TOPIC: 191001
KNOWLEDGE: K1.02 [3.0/3.3]
QID: P501 (B201)

The difference between the setpoint pressure at which a relief valve begins to open and the pressure at which it is fully open is called...

A. setpoint deviation.

B. setpoint tolerance.

C. accumulation.

D. blowdown.

ANSWER: C.

TOPIC: 191001
KNOWLEDGE: K1.02 [3.0/3.3]
QID: P1504 (B1801)

Which one of the following is a difference between a typical relief valve and a typical safety valve?

A. The actuator closing spring on a relief valve is in a compressed state whereas the actuator closing spring on a safety valve acts in tension.

B. A relief valve gradually opens as pressure increases above the setpoint pressure whereas a safety valve pops open at the setpoint pressure.

C. Relief valves are capable of being gagged whereas safety valves are <u>not</u>.

D. The blowdown of a relief valve is greater than the blowdown of a safety valve.

ANSWER: B.

TOPIC: 191001
KNOWLEDGE: K1.02 [3.0/3.3]
QID: P1801 (B1301)

Refer to the drawing of two identical pressure vessels with identical relief valve protection (see figure below).

Both vessels have been pressurized to 50 psig and then isolated. Vessel A is completely filled with water at 150°F. Vessel B is in a saturated condition with one-half steam (100 percent quality) and one-half water (0 percent quality) by volume.

If both relief valves fully open simultaneously, the faster pressure reduction will occur in vessel _____; and if both relief valves close at 40 psig, the greater mass loss will have occurred in vessel _____.

A. A; A

B. A; B

C. B; A

D. B; B

ANSWER: B.

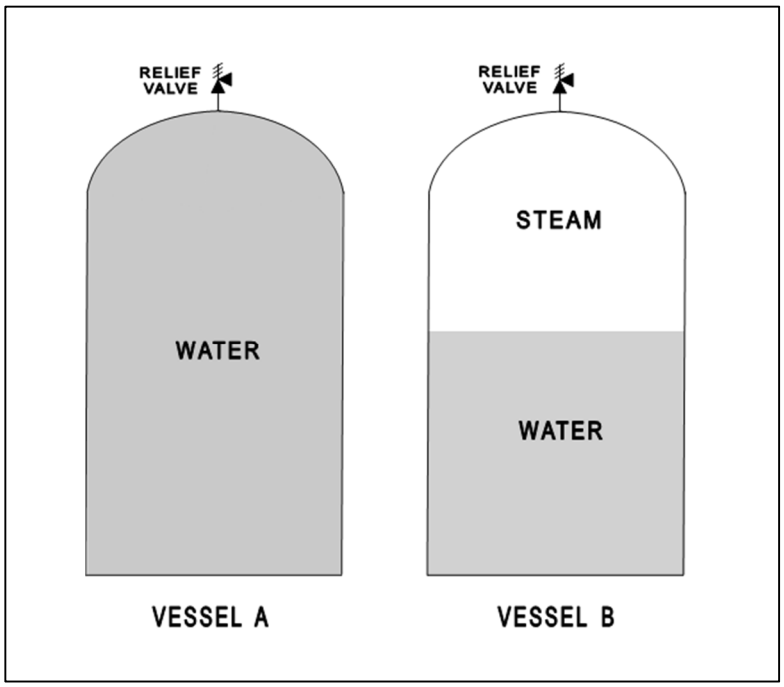

TOPIC: 191001
KNOWLEDGE: K1.02 [3.0/3.3]
QID: P2501 (B2501)

Water storage tanks A and B are identical except that tank A receives overpressure protection from a relief valve, whereas tank B uses a safety valve. The relief valve and safety valve have the same pressure setpoints and design flow rates.

Water is continuously added to each tank at the same rate (50 percent of the design flow rate of the relief and safety valves). After the tanks are completely full, tank A pressure will _____; and tank B pressure will _____.

A. fluctuate within a few percent of the pressure setpoint; stabilize slightly above the pressure setpoint

B. fluctuate within a few percent of the pressure setpoint; fluctuate within a few percent of the pressure setpoint

C. stabilize slightly above the pressure setpoint; stabilize slightly above the pressure setpoint

D. stabilize slightly above the pressure setpoint; fluctuate within a few percent of the pressure setpoint

ANSWER: D.

TOPIC: 191001
KNOWLEDGE: K1.02 [3.0/3.3]
QID: P2701 (B2701)

Vessels A and B are identical except that vessel A receives overpressure protection from an installed safety valve. Vessel B has an installed relief valve. The safety and relief valves have the same pressure setpoint and design flow rate.

Water is continuously added to each vessel at the same rate (50 percent of the design flow rate of the safety and relief valves). After vessel pressure reaches the setpoint for each valve, vessel A pressure will _____; and vessel B pressure will _____.

A. stabilize slightly above the pressure setpoint; stabilize slightly above the pressure setpoint

B. stabilize slightly above the pressure setpoint; fluctuate within a few percent of the pressure setpoint

C. fluctuate within a few percent of the pressure setpoint; stabilize slightly above the pressure setpoint

D. fluctuate within a few percent of the pressure setpoint; fluctuate within a few percent of the pressure setpoint

ANSWER: C.

TOPIC: 191001
KNOWLEDGE: K1.02 [3.4/3.6]
QID: P3302 (B2)

Refer to the drawing of two identical pressure vessels with identical relief valve protection (see figure below).

Vessel A is completely filled with subcooled water at 80°F and vessel B is in a saturated, two-phase condition. Both vessels are currently pressurized to 50 psig and isolated.

If both relief valves fully open simultaneously, the faster pressure reduction will initially occur in vessel _____; and the faster mass loss will initially occur in vessel_____.

A. A; A

B. A; B

C. B; A

D. B; B

ANSWER: A.

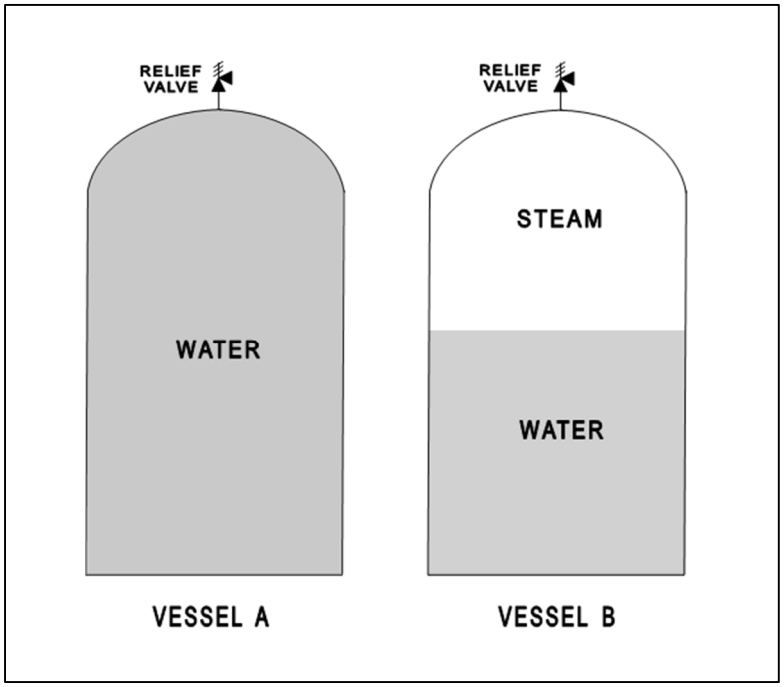

TOPIC: 191001
KNOWLEDGE: K1.02 [3.0/3.3]
QID: P6401 (B6402)

A completely full water storage tank is being hydrostatically tested to 200 psig using a positive displacement pump (PDP) with a smooth and constant discharge flow rate of 6 gpm. The tank is protected by two relief valves that discharge to the atmosphere. The relief valves have the following characteristics:

- Relief valve A opening setpoint is 200 psig with an accumulation of 1.5 percent.
- Relief valve B opening setpoint is 200 psig with an accumulation of 3.0 percent.
- Each valve has linear flow rate characteristics and a maximum discharge flow rate of 6 gpm.

The PDP is inadvertently left running when tank pressure reaches 200 psig.

With the PDP running continuously, what will be the discharge flow rates of the relief valves when tank pressure stabilizes?

	Relief Valve A	Relief Valve B
A.	1 gpm	5 gpm
B.	2 gpm	4 gpm
C.	3 gpm	3 gpm
D.	4 gpm	2 gpm

ANSWER: D.

TOPIC: 191001
KNOWLEDGE: K1.02 [3.0/3.3]
QID: P6701 (B6701)

A completely full water tank is being hydrostatically tested to 180 psig using a positive displacement pump (PDP) with a smooth and constant discharge flow rate of 6 gpm. The tank is protected by two relief valves that discharge to the atmosphere. The relief valves have the following characteristics:

- Relief valve A opening setpoint is 180 psig with an accumulation of 5 percent.
- Relief valve B opening setpoint is 200 psig with an accumulation of 5 percent.
- Each relief valve has linear flow rate characteristics and a maximum flow rate of 4 gpm.

The PDP is inadvertently left running when tank pressure reaches 180 psig.

With the PDP still running, at what pressure will the tank stabilize?

A. 190 psig

B. 195 psig

C. 205 psig

D. 210 psig

ANSWER: C.

TOPIC: 191001
KNOWLEDGE: K1.02 [3.0/3.3]
QID: P7611 (B7611)

A completely full water storage tank is being hydrostatically tested to 200 psig using a positive displacement pump (PDP) with a smooth and constant discharge flow rate of 4 gpm. The tank is protected by a relief valve that discharges to the atmosphere. The relief valve has the following characteristics:

- The opening setpoint is 200 psig with an accumulation of 5 percent.
- The valve has linear flow characteristics and a maximum rated flow rate of 8 gpm.

The PDP is inadvertently left running when tank pressure reaches 200 psig.

With the PDP still running, at what pressure will the tank stabilize?

A. 190 psig

B. 195 psig

C. 205 psig

D. 210 psig

ANSWER: C.

TOPIC: 191001
KNOWLEDGE: K1.03 [2.7/2.9]
QID: P602 (B2005)

In a comparison between a globe valve and a gate valve in the same water system application, the gate valve has a _____ pressure drop when fully open and is the _____ choice for throttling.

A. higher; better

B. lower; better

C. higher; poorer

D. lower; poorer

ANSWER: D.

TOPIC: 191001
KNOWLEDGE: K1.03 [2.7/2.9]
QID: P1201

Refer to the drawing of a lube oil heat exchanger (see figure below).

If a cooling water outlet valve is partially closed from the full open position, heat exchanger cooling water pressure upstream of the valve will _____; and the temperature of the lube oil exiting the heat exchanger will _____.

A. increase; decrease

B. increase; increase

C. decrease; decrease

D. decrease; increase

ANSWER: B.

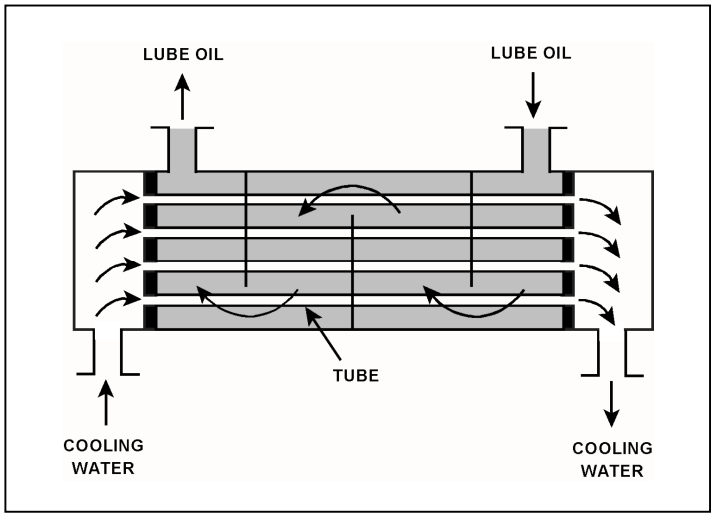

TOPIC: 191001
KNOWLEDGE: K1.03 [2.7/2.9]
QID: P1302 (B1505)

Consider a 3-inch gate valve and a 3-inch globe valve in separate but identical operating water systems. If both valves are fully open, the gate valve will produce the _____ head loss and the _____ flow rate.

A. smaller; larger

B. larger; smaller

C. smaller; smaller

D. larger; larger

ANSWER: A.

TOPIC: 191001
KNOWLEDGE: K1.03 [2.7/2.9]
QID: P2102 (B2101)

Which one of the following statements describes the flow rate characteristics of a typical gate valve in an operating water system?

A. The first 25 percent of valve disk travel in the open direction will produce a smaller change in flow rate than the last 25 percent of valve disk travel.

B. The first 25 percent of valve disk travel in the open direction will produce a greater change in flow rate than the last 25 percent of valve disk travel.

C. The first 25 percent of valve disk travel in the open direction will produce approximately the same change in flow rate as the last 25 percent of valve disk travel.

D. A gate valve that has been opened to 25 percent of valve disk travel will result in approximately 25 percent of full flow rate.

ANSWER: B.

TOPIC: 191001
KNOWLEDGE: K1.03 [2.7/2.9]
QID: P2302 (B2601)

Which one of the following statements describes the flow rate characteristics of a typical globe valve in an operating water system?

A. The first 25 percent of valve disk travel in the open direction will produce a smaller increase in flow rate than the last 25 percent of valve disk travel.

B. The first 25 percent of valve disk travel in the open direction will produce a greater increase in flow rate than the last 25 percent of valve disk travel.

C. The first 25 percent of valve disk travel in the open direction will produce approximately the same increase in flow rate as the last 25 percent of valve disk travel.

D. A globe valve that has been opened to 25 percent of valve disk travel will result in approximately 25 percent of full flow rate.

ANSWER: B.

TOPIC: 191001
KNOWLEDGE: K1.03 [2.7/2.9]
QID: P2303 (B2303)

A control valve is most likely to experience cavitation when the valve is almost fully _____ because of a relatively _____ pressure drop across the valve seat.

A. open; large

B. open; small

C. closed; large

D. closed; small

ANSWER: C.

TOPIC: 191001
KNOWLEDGE: K1.03 [2.7/2.9]
QID: P3001 (B3002)

Which one of the following statements describes the throttling characteristics of a typical globe valve?

A. The first third of valve disk travel in the open direction will result in approximately one-third of full flow rate.

B. The first third of valve disk travel in the open direction will produce a smaller increase in flow rate than the last third of valve disk travel.

C. The first third of valve disk travel in the open direction will produce a greater increase in flow rate than the last third of valve disk travel.

D. The first two-thirds of valve disk travel in the open direction will produce approximately the same increase in flow rate as the last third of valve disk travel.

ANSWER: C.

TOPIC: 191001
KNOWLEDGE: K1.03 [2.7/2.9]
QID: P3901 (B3902)

Refer to the drawing of a cooling water system in which both centrifugal pumps A and B are operating (see figure below).

An operator stops pump B, but the pump B check valve fails to close. In comparison to normal operation with only pump A running, operation with the failed pump B check valve will result in pump A flow rate being _____ than normal; and heat exchanger flow rate being _____ than normal.

A. higher; higher

B. higher; lower

C. lower; higher

D. lower; lower

ANSWER: B.

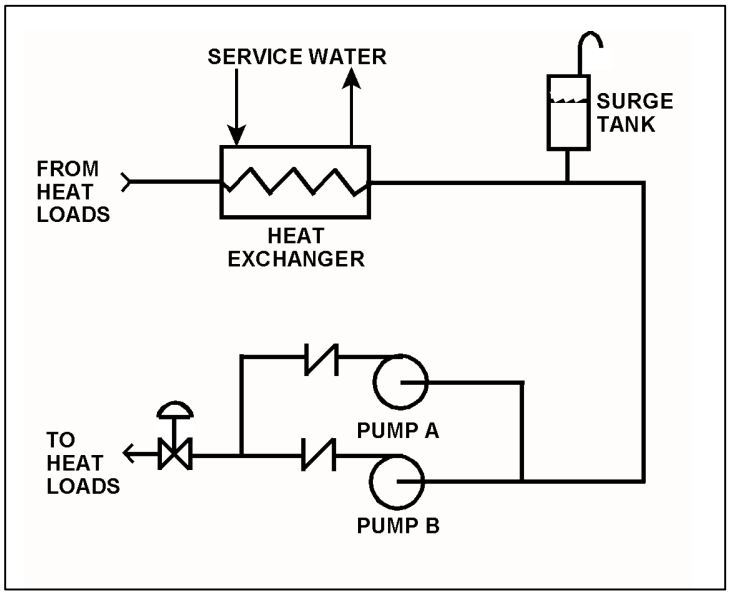

TOPIC: 191001
KNOWLEDGE: K1.03 [2.7/2.9]
QID: P4101 (B4103)

Which one of the following types of similarly sized valves in an operating water system produces the <u>least</u> frictional head loss when fully open?

A. Ball

B. Globe

C. Butterfly

D. Swing check

ANSWER: A.

TOPIC: 191001
KNOWLEDGE: K1.03 [2.7/2.9]
QID: P4801 (B4802)

Refer to the centrifugal pump operating curve with two system head loss curves (see figure below). The curves apply to an open cooling water system using one single-speed centrifugal pump discharging through a typical flow control valve.

One of the system curves shows system head loss with the flow control valve 25 percent open. The other system curve shows system head loss with the flow control valve 100 percent open. The pump is initially operating with the valve 25 percent open, resulting in a pump flow rate of 800 gpm.

If the flow control valve is subsequently fully opened, pump flow rate through the valve will be approximately...

A. 400 gpm.

B. 1,200 gpm.

C. 1,600 gpm.

D. 3,200 gpm.

ANSWER: B.

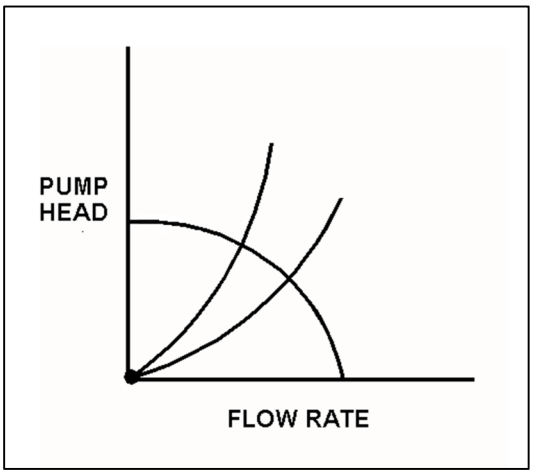

TOPIC: 191001
KNOWLEDGE: K1.03 [2.7/2.9]
QID: P4901 (B4901)

Consider a 6-inch globe valve and a 6-inch gate valve in the same water system application. Typically, the valve that requires the most linear disk travel from fully closed to fully open is the _____ valve; and the valve that produces the smallest pressure drop when fully open is the _____ valve.

A. gate; gate

B. gate; globe

C. globe; gate

D. globe; globe

ANSWER: A.

TOPIC: 191001
KNOWLEDGE: K1.03 [2.7/2.9]
QID: P6001 (B6001)

Subcooled water was flowing through a throttled valve with the following initial parameters:

Inlet pressure = 60 psia
Outlet pressure = 50 psia
Flow rate = 800 gpm

The valve was opened fully and the following parameters currently exist:

Inlet pressure = 60 psia
Outlet pressure = 55 psia

What is the approximate flow rate through the fully open valve?

A. 400 gpm

B. 566 gpm

C. 635 gpm

D. Cannot be determined without additional information.

ANSWER: D.

TOPIC: 191001
KNOWLEDGE: K1.03 [2.7/2.9]
QID: P6601 (B6601)

Subcooled water is flowing through a throttle valve in an open system. The initial steady-state conditions for the throttle valve are as follows:

Inlet pressure = 60 psia
Outlet pressure = 44 psia
Flow rate = 800 gpm

Four hours later, the current steady-state conditions for the throttle valve are as follows:

Inlet pressure = 63 psia
Outlet pressure = 54 psia
Flow rate = 600 gpm

Which one of the following could be responsible for the difference between the initial and current conditions for the throttle valve?

A. The throttle valve was opened more.

B. The throttle valve was closed more.

C. Another valve, located upstream of the throttle valve, was partially closed.

D. Another valve, located downstream of the throttle valve, was partially closed.

ANSWER: D.

TOPIC: 191001
KNOWLEDGE: K1.03 [2.7/2.9]
QID: P7302 (B7302)

Subcooled water is flowing through a throttled valve in an open system. The initial steady-state conditions for the throttled valve are as follows:

Inlet pressure = 60 psia
Outlet pressure = 44 psia
Flow rate = 800 gpm

After four hours, the current steady-state conditions for the throttled valve are as follows:

Inlet pressure = 62 psia
Outlet pressure = 40 psia
Flow rate = 600 gpm

Which one of the following could be responsible for the difference between the initial and current steady-state conditions for the throttled valve?

A. The throttled valve was opened more.

B. The throttled valve was closed more.

C. Another valve, located upstream of the throttled valve, was partially closed.

D. Another valve, located downstream of the throttled valve, was partially closed.

ANSWER: B.

TOPIC: 191001
KNOWLEDGE: K1.03 [2.7/2.9]
QID: P7601 (B7601)

Refer to the drawing of an operating cooling water system (see figure below) in which valves A and B are identical. Valve A is one-half open and valve B is fully open. If valve A is opened fully, the differential pressure (D/P) across valve B will…

A. increase by the same amount as the absolute change in D/P across valve A.

B. increase by an amount less than the absolute change in D/P across valve A.

C. decrease by the same amount as the absolute change in D/P across valve A.

D. decrease by an amount less than the absolute change in D/P across valve A.

ANSWER: B.

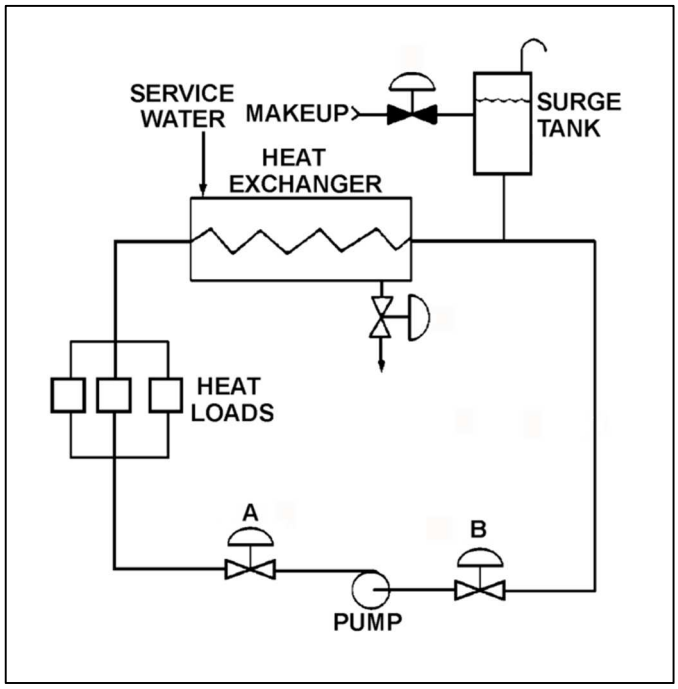

TOPIC: 191001
KNOWLEDGE: K1.03 [2.7/2.9]
QID: P7641 (B7641)

Consider a 6-inch globe valve and a 6-inch gate valve in the same water system application. The valve that typically requires the least linear travel of the disk from fully closed to fully open is the _____ valve; and the valve that produces the greatest pressure drop when fully open is the _____ valve.

A. gate; gate

B. gate; globe

C. globe; gate

D. globe; globe

ANSWER: D.

TOPIC: 191001
KNOWLEDGE: K1.03 [2.7/2.9]
QID: P7661 (B7661)

Subcooled water is flowing through a throttle valve in an open system. The initial steady-state conditions for the throttle valve are as follows:

Inlet pressure = 60 psia
Outlet pressure = 44 psia
Flow rate = 800 gpm

Four hours later, the current steady-state conditions for the throttle valve are as follows:

Inlet pressure = 51 psia
Outlet pressure = 42 psia
Flow rate = 600 gpm

Which one of the following could be responsible for the difference between the initial and current conditions for the throttle valve?

A. The throttle valve was opened more.

B. The throttle valve was closed more.

C. Another valve, located upstream of the throttle valve, was partially closed.

D. Another valve, located downstream of the throttle valve, was partially closed.

ANSWER: C.

TOPIC: 191001
KNOWLEDGE: K1.04 [2.8/3.2]
QID: P101 (B1903)

Refer to the drawing of a spring-loaded air-operated valve (see figure below).

Upon a loss of air pressure, this valve will...

A. go to the fully open position.

B. remain at the current position.

C. go to the fully closed position.

D. go to the midposition.

ANSWER: C.

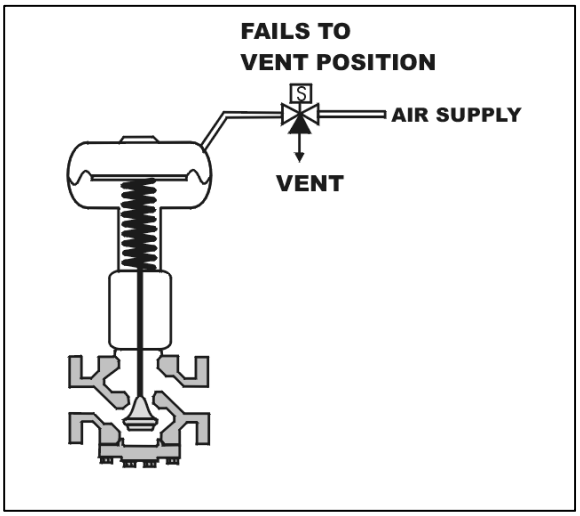

TOPIC: 191001
KNOWLEDGE: K1.04 [2.8/3.2]
QID: P112 (B1401)

Refer to the drawing of a spring-loaded air-operated valve (see figure below) in which the solenoid is shown energized.

Which one of the following will be the final valve position following a loss of electrical power to the solenoid?

A. Midposition

B. Closed

C. As is

D. Open

ANSWER: B.

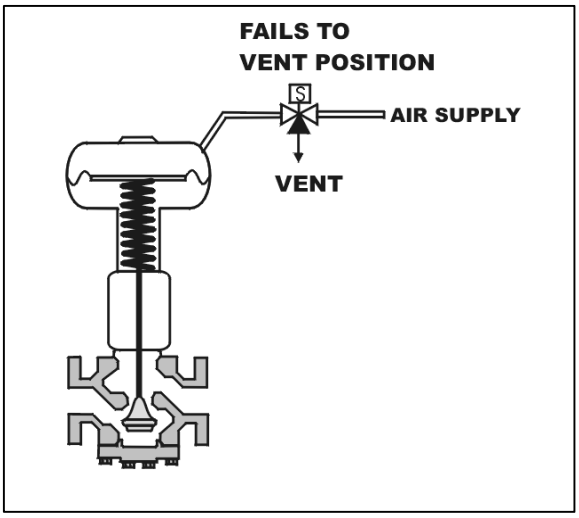

TOPIC: 191001
KNOWLEDGE: K1.04 [2.8/3.2]
QID: P203 (B502)

Refer to the drawing of a hydraulically-operated valve that is shown in a throttled position (see figure below).

Select the final position of this valve following a loss of hydraulic system pressure.

A. Fully open

B. As is

C. Fully closed

D. Midposition

ANSWER: A.

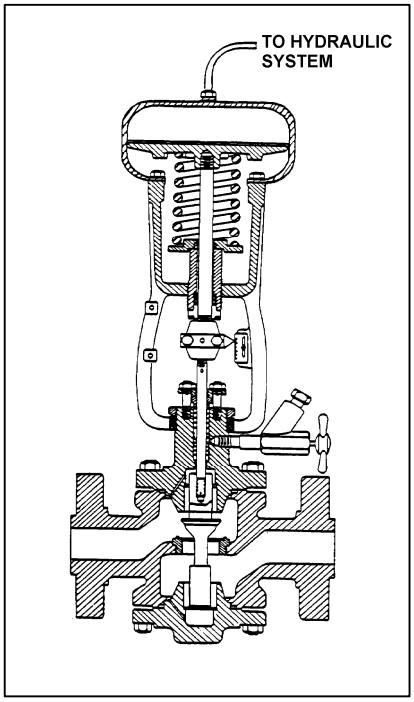

TOPIC: 191001
KNOWLEDGE: K1.04 [2.8/3.2]
QID: P1101 (B1109)

Refer to the drawing of a spring-loaded air-operated valve shown in a throttled position (see figure below).

The figure currently depicts normal air supply pressure and an energized solenoid. What will be the valve position following a loss of electrical power to the solenoid?

A. As is

B. More open

C. More closed

D. Varies with system flow

ANSWER: B.

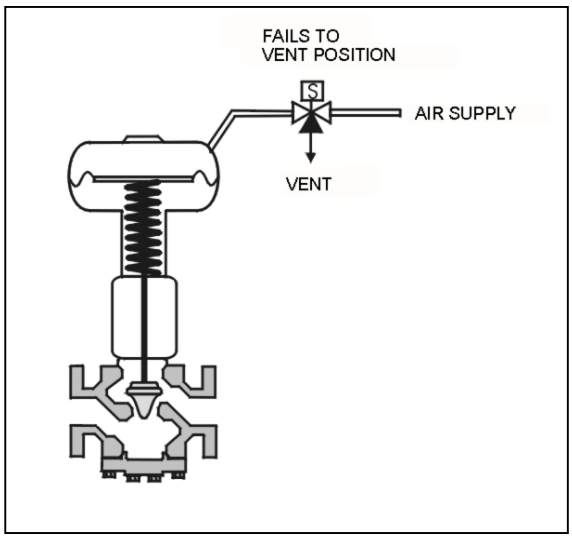

TOPIC: 191001
KNOWLEDGE: K1.04 [2.8/3.2]
QID: P1202 (B602)

How will a typical motor-operated valve respond to a loss of electrical power to the valve actuator?

A. Open fully

B. Close fully

C. Remain as is

D. Move to 50 percent open

ANSWER: C.

TOPIC: 191001
KNOWLEDGE: K1.04 [2.8/3.2]
QID: P2104 (B1002)

Refer to the drawing of a spring-loaded air-operated valve shown in a throttled position (see figure below).

Which one of the following will be the valve position following a reduction in air pressure to the valve actuator caused by a leaking air connection at the valve?

A. Original position

B. More closed

C. More open

D. Varies with system flow

ANSWER: B.

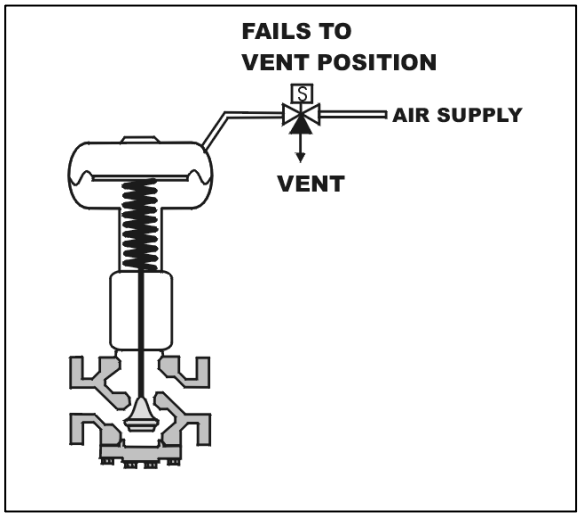

TOPIC: 191001
KNOWLEDGE: K1.04 [2.8/3.2]
K1.08 [3.4/3.4]
QID: P5002 (B5002)

Refer to the drawing of a pneumatically-operated valve (see figure below). The valve actuator may be shown with or without air pressure applied to it.

Which one of the following describes the type of valve shown, and the fail position on loss of air to the actuator?

	Valve Type	Fail Position
A.	Gate	Open
B.	Gate	Closed
C.	Globe	Open
D.	Globe	Closed

ANSWER: C.

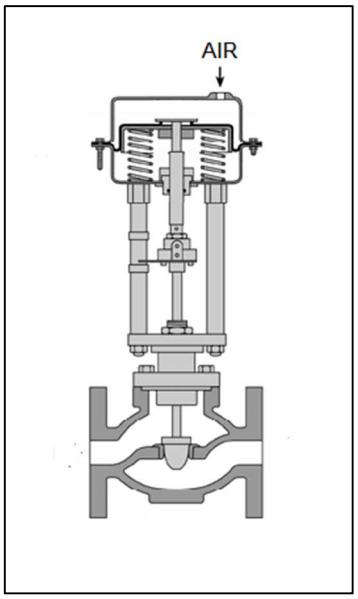

TOPIC: 191001
KNOWLEDGE: K1.04 [2.8/3.2]
KNOWLEDGE: K1.08 [3.4/3.4]
QID: P5302 (B5301)

Refer to the drawing of four air-operated valves (see figure below). **Note:** The valve actuators may be shown with or without air pressure applied.

Given:

- The direction of system flow is from left to right when the valves are open.
- The internal components for each valve are identical except for the orientation of the valve disk and seat.
- The valve actuators exert the same force on the attached valve stem for a given applied air pressure.

If each actuator is vented, which valve disk will remain closed with the most force?

A. A.

B. B.

C. C.

D. D.

ANSWER: C.

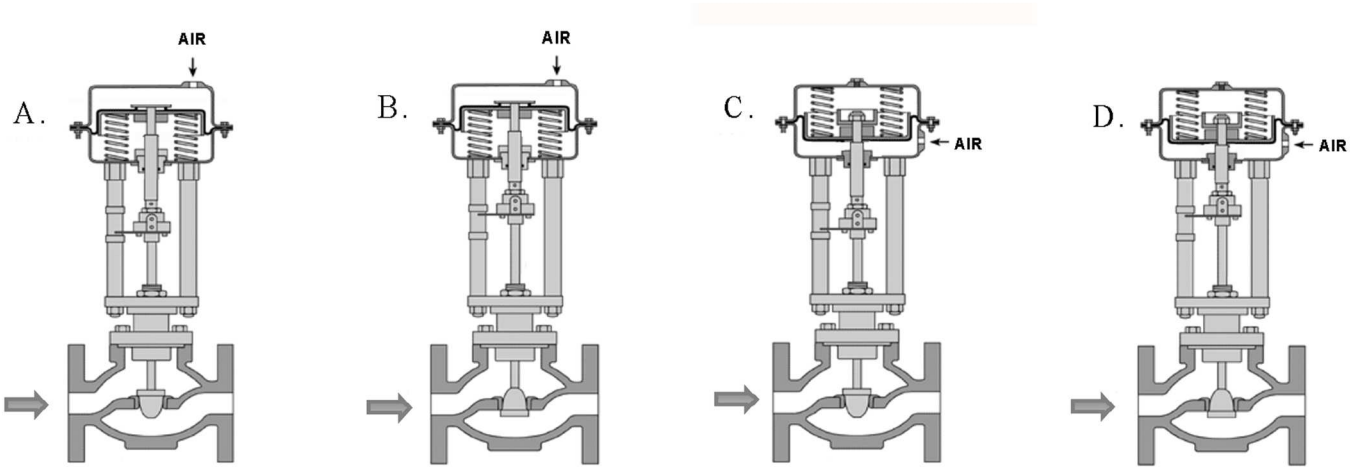

TOPIC: 191001
KNOWLEDGE: K1.04 [2.8/3.2]
QID: P5502 (B5502)

Refer to the drawing of four air-operated valves (see figure below). **Note:** The valve actuators may be shown with or without air pressure applied.

Which valves are currently shown in their failed (i.e., no air pressure applied to the actuator) positions?

A. A and B

B. B and C

C. C and D

D. D and A

ANSWER: B.

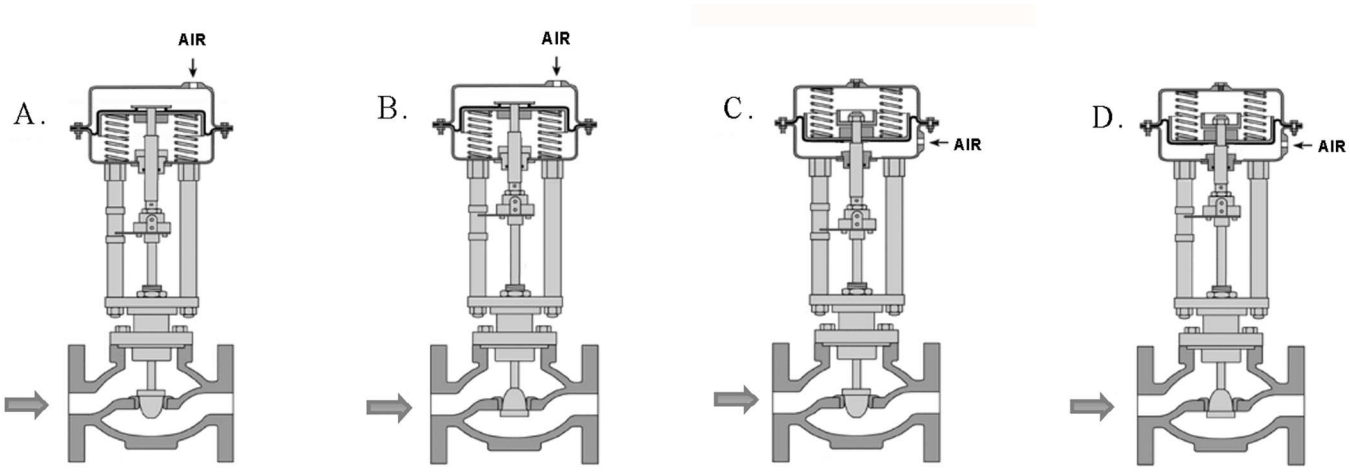

TOPIC: 191001
KNOWLEDGE: K1.04 [2.8/3.2]
KNOWLEDGE: K1.08 [3.4/3.4]
QID: P5901 (B5902)

Refer to the drawing of a pneumatically-operated valve (see figure below). The valve actuator may be shown with or without applied air pressure.

Which one of the following describes the type of valve shown, and the valve's fail position on loss of air to the actuator?

	Valve Type	Fail Position
A.	Ball	Open
B.	Ball	Closed
C.	Globe	Open
D.	Globe	Closed

ANSWER: D.

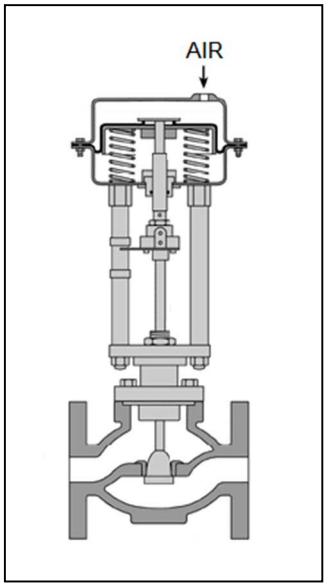

TOPIC: 191001
KNOWLEDGE: K1.05 [2.6/2.8]
QID: P201 (B206)

An operator attempts to close a fully-open upright manual gate valve to isolate a pump in a cooling water system that has been cooled down for maintenance. However, the operator is unable to rotate the handwheel in the close direction.

Which one of the following could cause this condition?

A. A hydraulic lock has developed under the valve disk.

B. A hydraulic lock has developed in the valve bonnet between the valve disk and the packing gland.

C. The two halves of the valve disk have expanded and are jammed against the valve seats.

D. The valve disk has jammed against its backseat by the difference in the thermal contraction of the stem and the bonnet.

ANSWER: D.

TOPIC: 191001
KNOWLEDGE: K1.05 [2.6/2.8]
QID: P403

When manually positioning a motor-operated valve, why must care be taken to avoid using excessive valve seating/backseating force?

A. The valve may bind during subsequent operation.

B. Valve stem limit switch settings may become inaccurate.

C. The clutch may <u>not</u> reengage the valve motor when required.

D. Stem position may no longer be an accurate indicator of valve position.

ANSWER: A.

TOPIC: 191001
KNOWLEDGE: K1.05 [2.6/2.8]
QID: P1303 (B2802)

After an adjustment of the packing gland on a valve that had a minor packing leak, an operator attempts to operate the valve, but finds the valve is stuck. What is the most probable cause?

A. The disk separated from the valve stem as a result of overtightening the packing gland.

B. The operator placed the valve in the wrong position for adjusting the packing gland.

C. The valve was overtorqued in the closed direction during the packing gland adjustment.

D. The maintenance technician overtightened the packing gland, causing the stem to bind.

ANSWER: D.

TOPIC: 191001
KNOWLEDGE: K1.05 [2.6/2.8]
QID: P1603 (B1003)

An adjustment has just been completed on the packing gland of a motor-operated gate valve to stop a minor stem leak. Which one of the following can occur if the technician overtightened the packing gland?

A. Decreased cooling flow to the valve internals.

B. Separation of the valve disk from the valve stem.

C. Misalignment of the valve position limit switches.

D. Increased stroke time from fully open to fully closed.

ANSWER: D.

TOPIC: 191001
KNOWLEDGE: K1.05 [2.6/2.8]
QID: P1902 (B6)

Which one of the following describes the function and use of the backseat on a manual valve?

A. Removes pressure from the packing/stuffing box and is typically used to isolate the stuffing box for valve repacking.

B. Removes pressure from the packing/stuffing box and is typically used when needed to isolate packing leakage.

C. Acts as a backup in case the primary seat leaks and is typically used during system isolation for personnel protection.

D. Acts as a backup in case the primary seat leaks and is typically used when needed to prevent the primary seat from leaking excessively.

ANSWER: B.

TOPIC: 191001
KNOWLEDGE: K1.05 [2.6/2.8]
QID: P2503 (B2603)

When manually closing a motor-operated valve, why must the operator avoid using excessive valve seating force?

A. The valve may bind and cause the motor to trip on overload during subsequent remote operation.

B. The valve actuator clutch may be damaged and disable subsequent remote operation.

C. The valve stem limit switches may be damaged and cause inaccurate remote valve position indication.

D. The valve actuator position indicator may be damaged and cause inaccurate local valve position indication.

ANSWER: A.

TOPIC: 191001
KNOWLEDGE: K1.05 [2.6/2.8]
QID: P3503 (B3503)

Refer to the drawing of a water supply pump with two suction sources (see figure below). All motor-operated valves (MOVs) are currently closed.

Which one of the following MOV interlocks will permit the pump to take a suction on either the building sump or the water storage tank, while preventing the two sources from being cross-connected?

A. Neither MOV-1 nor MOV-2 can be opened unless MOV-3 is fully closed.

B. None of the MOVs can be opened unless at least one MOV remains fully closed.

C. None of the MOVs can be opened unless at least two MOVs remain fully closed.

D. Neither MOV-1 nor MOV-2 can be opened unless the other source MOV is fully closed.

ANSWER: D.

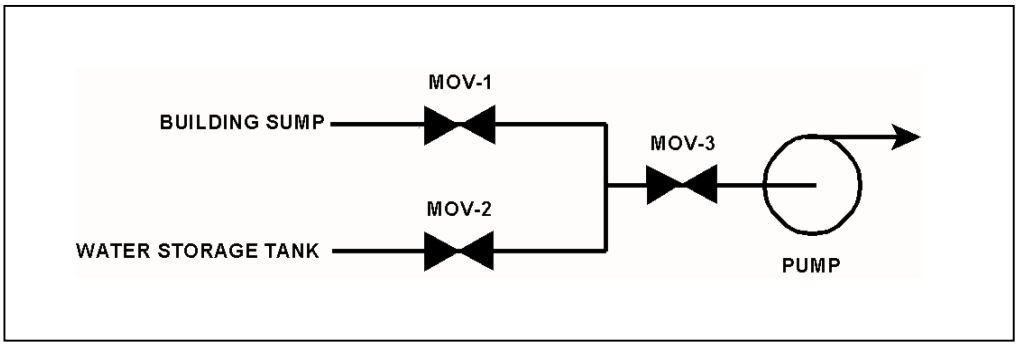

TOPIC: 191001
KNOWLEDGE: K1.06 [3.3/3.7]
QID: P4

After manually positioning a motor-operated valve, the valve actuator motor is reengaged by...

A. taking the manual declutch lever to the disengage position.

B. taking the manual declutch lever to the engage position.

C. racking in the valve actuator motor breaker.

D. energizing the valve actuator motor.

ANSWER: D.

TOPIC: 191001
KNOWLEDGE: K1.06 [3.3/3.7]
QID: P204 (B204)

When the manual declutch lever of a motor-operated valve is moved out of the normal position, it _____ the motor and _____ the handwheel.

A. engages; engages

B. engages; disengages

C. disengages; engages

D. disengages; disengages

ANSWER: C.

TOPIC: 191001
KNOWLEDGE: K1.06 [3.3/3.7]
QID: P1702 (B1605)

A typical motor-operated valve with a declutch lever is installed in an emergency core cooling system (ECCS) application. The ECCS actuation signal is designed to energize the valve motor and open the valve. The valve is currently open, but being manually/locally closed by a technician as required by a surveillance test procedure. The declutch lever has been operated and released, and the valve is being closed by operation of the valve handwheel.

If an ECCS actuation signal is received, how will the valve be affected?

A. The handwheel will disengage and the valve will automatically open.

B. The handwheel will disengage and the valve will remain in the current position.

C. The handwheel will remain engaged and the valve will automatically open.

D. The handwheel will remain engaged and the technician can continue to close the valve.

ANSWER: A.

TOPIC: 191001
KNOWLEDGE: K1.06 [3.3/3.7]
QID: P2003 (B2004)

A surveillance test procedure is being performed on a typical motor-operated valve (MOV) with a declutch lever that is used in an emergency core cooling system (ECCS) application. The declutch lever has been operated and released, and the valve is being manually/locally opened by a technician. The MOV breaker is closed as required by the surveillance test procedure. During operation of the valve handwheel, an ECCS actuation signal is received that normally energizes the valve motor and closes the valve.

How will the valve be affected by the actuation signal?

A. The handwheel will disengage and the valve will automatically close.

B. The handwheel will disengage and the valve will remain in the current position.

C. The handwheel will remain engaged and the valve will automatically close.

D. The handwheel will remain engaged and the technician can continue to open the valve.

ANSWER: A.

TOPIC: 191001
KNOWLEDGE: K1.06 [3.3/3.7]
QID: P2703 (B2704)

A typical motor-operated valve (MOV) has just been opened from the main control room, and the breaker for the MOV has been opened. A plant operator has been directed to close the MOV locally for a surveillance test.

If the operator attempts to turn the MOV handwheel in the clockwise direction without first operating the declutch lever, which one of the following will occur?

A. The handwheel will turn, but the valve stem will not move.

B. The handwheel will not turn, and the valve stem will not move.

C. The handwheel will turn, and the valve stem will move toward the closed position because the clutch is automatically engaged when the handwheel is turned.

D. The handwheel will turn, and the valve stem will move toward the closed position because the clutch is automatically engaged when the breaker is opened.

ANSWER: A.

TOPIC: 191001
KNOWLEDGE: K1.06 [3.3/3.7]
QID: P4002 (B4003)

Which one of the following types of similarly sized valves requires the most manual valve stem rotation to move the valve from fully open to fully closed? (Assume that each valve has a non-rising stem.)

A. Ball

B. Gate

C. Plug

D. Butterfly

ANSWER: B.

TOPIC: 191001
KNOWLEDGE: K1.07 [2.5/2.8]
QID: P303 (B302)

A stop check valve is a type of check valve that...

A. cannot be shut remotely.

B. can be used to prevent flow in both directions.

C. contains both a gate valve disk and a check valve disk.

D. can be opened manually to allow flow in both directions.

ANSWER: B.

TOPIC: 191001
KNOWLEDGE: K1.07 [2.5/2.8]
QID: P503

Which one of the following valves is used to control the direction of fluid flow and prevent backflow in a system?

A. Safety valve

B. Relief valve

C. Divert valve

D. Check valve

ANSWER: D.

TOPIC: 191001
KNOWLEDGE: K1.07 [2.5/2.8]
QID: P802 (B2204)

Two common types of check valves used in nuclear power plants are...

A. globe and gate.

B. ball and plug.

C. swing and lift.

D. needle and angle.

ANSWER: C.

TOPIC: 191001
KNOWLEDGE: K1.07 [2.5/2.8]
QID: P1003 (B2903)

A typical check valve is designed to...

A. permit flow in only one direction.

B. prevent system overpressure.

C. isolate system components.

D. perform automatic pump venting.

ANSWER: A.

TOPIC: 191001
KNOWLEDGE: K1.07 [2.5/2.8]
QID: P1503 (B205)

Check valves are normally used to prevent...

A. overpressurization of nonoperating system piping and components.

B. backflow through nonoperating components or flowpaths.

C. pump runout by providing a constant backpressure.

D. pump cavitation by keeping nonoperating systems filled.

ANSWER: B.

TOPIC: 191001
KNOWLEDGE: K1.07 [2.5/2.8]
QID: P2202 (B1102)

Which one of the following is the type of valve used to control the direction of fluid flow through a system and prevent backflow?

A. Butterfly valve

B. Gate valve

C. Globe valve

D. Check valve

ANSWER: D.

TOPIC: 191001
KNOWLEDGE: K1.08 [3.4/3.4]
QID: P5 (B402)

To verify that a manual valve in an operating system is closed, the operator should observe valve position indication and operate the valve handwheel in the...

A. open direction until flow sounds are heard, then close the valve using normal force.

B. close direction using normal force and verify there is no substantial handwheel movement.

C. close direction until it stops, then close it an additional one-half turn using additional force if necessary.

D. open direction until the valve stem moves in the open direction, then close the valve using normal force.

ANSWER: B.

TOPIC: 191001
KNOWLEDGE: K1.08 [3.4/3.4]
QID: P205 (B503)

To verify the position of a <u>fully</u> <u>open</u> manual valve in an operating system, the operator should operate the valve handwheel...

A. in the open direction until the valve is backseated one-half turn.

B. to fully close the valve, then open the valve to the fully open position.

C. in the closed direction, then open the valve to its previously open position.

D. to open the valve until it touches the backseat, then close the valve to the desired position.

ANSWER: C.

TOPIC: 191001
KNOWLEDGE: K1.08 [3.4/3.4]
QID: P405 (B2205)

Consider a typical gate valve and a typical globe valve in the same water system application. The globe valve generally has a _____ pressure drop when fully open; and is _____ commonly used for throttling system flow.

A. smaller; less

B. larger; more

C. smaller; more

D. larger; less

ANSWER: B.

TOPIC: 191001
KNOWLEDGE: K1.08 [3.4/3.4]
QID: P1104 (B504)

Gate valves should not be used to throttle fluid flow because...

A. the tortuous flow path through a gate valve body makes flow control difficult.

B. gate valves must be fully opened and backseated to prevent stem leakage.

C. the turbulent flow created by a partially opened gate valve will cause erosion damage to the valve seat.

D. the large size of the gate valve disk requires an oversized actuator to accurately position the disk.

ANSWER: C.

TOPIC: 191001
KNOWLEDGE: K1.08 [3.4/3.4]
QID: P1405 (B1705)

Refer to the drawing of a valve (see figure below).

Which one of the following describes the type of valve shown?

A. Rising-stem globe valve

B. Nonrising-stem globe valve

C. Rising-stem gate valve

D. Nonrising-stem gate valve

ANSWER: D.

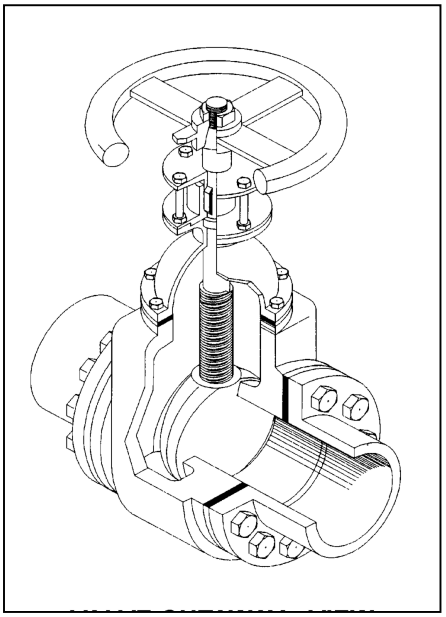

TOPIC: 191001
KNOWLEDGE: K1.08 [3.4/3.4]
QID: P1501 (B1805)

Consider a 3-inch gate valve and a 3-inch globe valve in the same flowing water system application. If both valves are fully open, the globe valve produces the _____ head loss and the _____ flow rate.

A. larger; larger

B. larger; smaller

C. smaller; larger

D. smaller; smaller

ANSWER: B.

TOPIC: 191001
KNOWLEDGE: K1.08 [3.4/3.4]
QID: P1602 (B1404)

Which one of the following is a generally accepted method for locally verifying that a manual valve is fully closed in a depressurized static piping system?

A. Check a downstream flow gauge to be indicating zero flow.

B. Visually observe the valve rising-stem threading to be fully exposed.

C. Attempt to turn the valve handwheel in the close direction and verify no movement.

D. Compare an upstream and downstream pressure gauge to ensure zero differential pressure.

ANSWER: C.

TOPIC: 191001
KNOWLEDGE: K1.08 [3.4/3.4]
QID: P1604 (B1604)

In a comparison between a typical gate valve and a typical globe valve in the same water system application with both valves fully open, the gate valve has a _____ pressure drop and is normally used in _____ flow applications.

A. larger; throttling

B. larger; on/off

C. smaller; throttling

D. smaller; on/off

ANSWER: D.

TOPIC: 191001
KNOWLEDGE: K1.08 [3.4/3.4]
QID: P1704 (B1802)

To verify a manual valve in an operating system is closed, the operator should observe valve position indication and operate the valve handwheel in the...

A. open direction at least one full rotation, then close the valve using normal force.

B. open direction until system flow is observed, then close the valve using normal force.

C. close direction using normal force and verify there is no substantial handwheel movement.

D. close direction using normal force, then operate the valve handwheel an additional one-quarter turn in the close direction.

ANSWER: C.

TOPIC: 191001
KNOWLEDGE: K1.08 [3.4/3.4]
QID: P1901 (B1305)

Which one of the following is a disadvantage associated with using a gate valve, versus a globe valve, to throttle flow in a cooling water system?

A. The tortuous flow path through a throttled gate valve body makes flow control difficult.

B. A gate valve will experience stem leakage unless it is fully opened and backseated.

C. The turbulent flow created by a throttled gate valve will cause erosion damage to the valve seat.

D. A fully open gate valve will produce a greater system head loss than a fully open globe valve.

ANSWER: C.

TOPIC: 191001
KNOWLEDGE: K1.08 [3.4/3.4]
QID: P2004 (B1205)

After an adjustment of the packing gland on a valve that had a minor packing leak, the operator attempts to operate the valve, but finds that the valve is stuck. What is the most probable cause?

A. The disk separated from the valve stem as a result of overtightening the packing gland.

B. The operator placed the valve in the wrong position for adjusting the packing gland.

C. The valve was overtorqued in the close direction during the packing gland adjustment.

D. The maintenance technician overtightened the packing gland, causing the stem to bind.

ANSWER: D.

TOPIC: 191001
KNOWLEDGE: K1.08 [3.4/3.4]
QID: P2103 (B203)

Which one of the following is not a generally accepted method for locally verifying that a valve is open?

A. Observe local flow rate instrumentation.

B. Check the local valve position indicator indicates OPEN.

C. Turn the valve operator in the close direction and verify that some movement occurs.

D. Attempt to turn the valve operator in the open direction and verify that no movement occurs.

ANSWER: D.

TOPIC: 191001
KNOWLEDGE: K1.08 [3.4/3.4]
QID: P2204 (B2605)

Why are gate valves generally not used to throttle water flow?

A. Rapid changes in flow direction inside the valve cause a large unrecoverable system head loss.

B. Gate valves experience stem leakage unless they are fully open or fully closed.

C. The turbulent flow created by a partially opened gate valve causes excessive seat and disk wear.

D. Flow rate through a gate valve is not proportional to the differential pressure across the valve.

ANSWER: C.

TOPIC: 191001
KNOWLEDGE: K1.08 [3.4/3.4]
QID: P2304 (B2305)

In a comparison between globe valves and gate valves in the same water system application, globe valves...

A. are less effective at throttling flow.

B. are less effective as pressure regulating valves.

C. produce a smaller pressure decrease when fully open.

D. require less force to open against large differential pressures.

ANSWER: D.

TOPIC: 191001
KNOWLEDGE: K1.08 [3.4/3.4]
QID: P2404 (B905)

In a comparison between gate valves and globe valves in the same water system application, gate valves...

A. are more effective at throttling flow.

B. are more effective as pressure regulating valves.

C. produce a larger pressure decrease when fully open.

D. require more force to open against large differential pressures.

ANSWER: D.

TOPIC: 191001
KNOWLEDGE: K1.08 [3.4/3.4]
QID: P2504 (B2504)

In a comparison between butterfly valves and ball valves, _____ valves are generally more leak-tight in high pressure applications; and _____ valves generally exhibit the smaller pressure decrease when fully open.

A. ball; ball

B. ball; butterfly

C. butterfly; ball

D. butterfly; butterfly

ANSWER: A.

TOPIC: 191001
KNOWLEDGE: K1.08 [3.4/3.4]
QID: P2604 (B805)

A gate valve is generally a poor choice for throttling fluid flow because...

A. the turbulent flow created by a partially opened gate valve can cause extensive damage to the valve.

B. the tortuous path through a gate valve body can make flow control difficult.

C. excessive stem leakage will result unless the gate valve is fully open or fully closed.

D. the head loss from a throttled gate valve will result in an unacceptable reduction in system flow rate.

ANSWER: A.

TOPIC: 191001
KNOWLEDGE: K1.08 [3.4/3.4]
QID: P2903 (B2904)

In a comparison between ball valves and butterfly valves in the same water system application, the valve that typically would allow more leakage when fully closed with a high differential pressure is the _____ valve; and the valve that typically would cause the greater pressure loss when fully open is the _____ valve.

A. ball; butterfly

B. ball; ball

C. butterfly; butterfly

D. butterfly; ball

ANSWER: C.

TOPIC: 191001
KNOWLEDGE: K1.08 [3.4/3.4]
QID: P3304 (B3304)

A typical motor-operated valve has been returned to service following a complete maintenance overhaul of the valve and actuator. The valve was remotely opened and closed to verify operability. The measured valve stroke time in each direction was 15 seconds, which is 25 percent longer than normal.

Which one of the following could have caused the increased stroke time?

A. The valve position limit switches were removed and were <u>not</u> reinstalled.

B. The valve torque limit switches were misadjusted to open at half their normal setpoints.

C. The valve was packed with improved packing material having a lower friction coefficient.

D. The valve stem packing gland was overtightened after the packing material was replaced.

ANSWER: D.

TOPIC: 191001
KNOWLEDGE: K1.08 [3.4/3.4]
QID: P3804 (B3804)

In a comparison between ball valves and butterfly valves in the same water system application, the valve that would typically be more leak-tight when fully closed with a high differential pressure is the _____ valve; and the valve that typically results in the greater pressure decrease when fully open is the _____ valve.

A. ball; butterfly

B. ball; ball

C. butterfly; butterfly

D. butterfly; ball

ANSWER: A.

TOPIC: 191001
KNOWLEDGE: K1.08 [3.4/3.4]
QID: P7002 (B7003)

In a comparison between ball valves and butterfly valves in the same cooling water system application, the valve that would typically experience the greater seat leakage when fully closed with a large differential pressure is the _____ valve; and the valve that would typically cause the smaller head loss when fully open is the _____ valve.

A. ball; butterfly

B. ball; ball

C. butterfly; butterfly

D. butterfly; ball

ANSWER: D.

TOPIC: 191001
KNOWLEDGE: K1.08 [3.4/3.4]
QID: P7621 (B7621)

During a local inspection of a manually operated 12-inch gate valve, the valve stem is observed to extend outward from the valve handwheel by 1 inch. The entire external valve stem is threaded, except for a 1-inch section that becomes smooth just before the valve stem enters the packing gland.

Which one of the following describes the position of the gate valve?

A. The valve is fully open or nearly fully open.

B. The valve is fully closed or nearly fully closed.

C. The valve may be in any position because it is a rising stem gate valve.

D. The valve may be in any position because it is a non-rising stem gate valve.

ANSWER: B.

TOPIC: 191001
KNOWLEDGE: K1.08 [3.4/3.4]
QID: P7631 (B7631)

A typical motor-operated valve has been returned to service following a complete maintenance overhaul of the valve and actuator. When the valve was remotely opened and closed to verify operability, the measured valve stroke time in each direction was 15 seconds, which is shorter than normal for this valve.

Which one of the following could have caused the shorter stroke time?

A. The valve position limit switches were removed and were <u>not</u> reinstalled.

B. The valve torque limit switches were misadjusted to open at twice their normal setpoints.

C. The valve was packed with improved packing material having a lower friction coefficient.

D. The valve stem packing gland was overtightened after the packing material was replaced.

ANSWER: C.

TOPIC: 191001
KNOWLEDGE: K1.08 [3.4/3.4]
QID: P7651 (B7651)

During a local inspection of a manually operated three-inch gate valve, the valve stem is observed to be flush with the top of the handwheel. Two inches of unthreaded valve stem is visible between the handwheel and the packing gland. The handwheel is mounted to the valve body and valve stem such that the handwheel can be rotated in either direction, but cannot change its axial position.

Which one of the following describes the position of the valve?

A. The valve is fully open or nearly fully open.

B. The valve is fully closed or nearly fully closed.

C. The valve may be in any position because it has a rising stem.

D. The valve may be in any position because it has a non-rising stem.

ANSWER: D.

TOPIC: 191002
KNOWLEDGE: K1.02 [2.7/2.9]
QID: P6 (B1806)

Density input is normally used in steam flow instruments to convert _____ into _____.

A. mass flow rate; volumetric flow rate

B. volumetric flow rate; mass flow rate

C. mass flow rate; differential pressure

D. differential pressure; volumetric flow rate

ANSWER: B.

TOPIC: 191002
KNOWLEDGE: K1.02 [2.7/2.9]
QID: P305 (B2906)

If the steam pressure input to a density-compensated steam flow instrument fails high, the associated flow rate indication will...

A. decrease, because the density input has decreased.

B. increase, because the density input has decreased.

C. decrease, because the density input has increased.

D. increase, because the density input has increased.

ANSWER: D.

TOPIC: 191002
KNOWLEDGE: K1.02 [2.7/2.9]
QID: P406 (B1606)

The density compensating input to a steam flow instrument is used to convert volumetric flow rate to…

A. velocity flow rate.

B. gallons per minute.

C. mass flow rate.

D. differential flow rate.

ANSWER: C.

TOPIC: 191002
KNOWLEDGE: K1.02 [2.7/2.9]
QID: P705 (B708)

A steam flow measuring instrument uses density compensation and square root compensation to convert the differential pressure across a flow element to flow rate in lbm/hr.

The purpose of square root compensation in this flow measuring instrument is to convert _____ to _____.

A. volumetric flow rate; mass flow rate

B. volumetric flow rate; differential pressure

C. differential pressure; mass flow rate

D. differential pressure; volumetric flow rate

ANSWER: D.

TOPIC: 191002
KNOWLEDGE: K1.02 [2.7/2.9]
QID: P1212

If the steam pressure input to a density-compensated steam flow instrument fails low, the indicated flow rate will...

A. increase, because the density input has increased.

B. decrease, because the density input has increased.

C. increase, because the density input has decreased.

D. decrease, because the density input has decreased.

ANSWER: D.

TOPIC: 191002
KNOWLEDGE: K1.02 [2.7/2.9]
QID: P3605 (B3608)

A steam flow measuring instrument uses density compensation and square root extraction to convert the differential pressure across the flow element to flow rate in lbm/hr.

The purpose of density compensation in this flow measuring instrument is to convert _____ to _____.

A. volumetric flow rate; mass flow rate

B. volumetric flow rate; differential pressure

C. differential pressure; mass flow rate

D. differential pressure; volumetric flow rate

ANSWER: A.

TOPIC: 191002
KNOWLEDGE: K1.02 [2.7/2.9]
QID: P4603 (B4604)

A main steam flow rate differential pressure detector was properly calibrated to produce a main steam flow rate indication of 500,000 lbm/hr with the following initial input conditions:

Detector high pressure input = 1,000 psia
Detector low pressure input = 950 psia

The current detector input conditions are as follows:

Detector high pressure input = 985 psia
Detector low pressure input = 935 psia

Assume that the detector and associated circuitry do not have steam density compensation. Also assume that the main steam quality and volumetric flow rate do not change.

The current main steam flow rate indication is _____ 500,000 lbm/hr; and the current main steam flow rate is _____ 500,000 lbm/hr.

A. equal to; greater than

B. less than; greater than

C. equal to; less than

D. greater than; less than

ANSWER: C.

TOPIC: 191002
KNOWLEDGE: K1.02 [2.7/2.9]
QID: P4703 (B4704)

A nuclear power plant is initially operating with the following main steam parameter values:

Main steam pressure = 1,000 psia
Main steam flow rate = 500,000 lbm/hr

Main steam pressure decreases and stabilizes at 950 psia.

Assume 100 percent quality saturated steam and that main steam volumetric flow rate is the same before and after the pressure change.

Which one of the following is the approximate mass flow rate of main steam after the pressure change?

A. 528,000 lbm/hr

B. 500,000 lbm/hr

C. 472,000 lbm/hr

D. 444,000 lbm/hr

ANSWER: C.

TOPIC: 191002
KNOWLEDGE: K1.02 [2.7/2.9]
QID: P6103 (B6104)

For water flowing through a venturi, there is a proportional relationship between flow rate and differential pressure. For steam flowing through a venturi, the relationship must be modified to account for changes in _____ as the steam flows through the venturi.

A. velocity

B. enthalpy

C. internal energy

D. specific volume

ANSWER: D.

TOPIC: 191002
KNOWLEDGE: K1.02 [2.7/2.9]
QID: P6403

A nuclear power plant is operating at 100 percent power with constant steam generator water levels. Only main feedwater is entering the steam generators and only main steam is leaving the steam generators. Both the main feedwater mass flow rate and the main steam mass flow rate instruments use venturi flow sensing elements.

For the above conditions, the indication that most accurately reflects the mass flow rate through a steam generator will typically be the mass flow rate indication for...

A. main feedwater, because condensation can adversely affect the characteristics of a steam flow venturi.

B. main feedwater, because steam generator pressure changes affect the specific volume of steam more than water.

C. main steam, because the enthalpy of high quality steam flowing through a venturi is constant, unlike the enthalpy of water.

D. main steam, because a given mass flow rate of steam through a venturi develops a larger pressure change than the same mass flow rate of water.

ANSWER: B.

TOPIC: 191002
KNOWLEDGE: K1.03 [2.7/2.9]
QID: P206

The most probable cause for fluctuating indication from a liquid flow rate differential pressure detector is...

A. gas or steam being trapped in the liquid.

B. unequal temperature gradients in the liquid.

C. vortexing of the liquid passing through the flow device.

D. the valve on the high pressure sensing line being partially closed.

ANSWER: A.

TOPIC: 191002
KNOWLEDGE: K1.03 [2.7/2.9]
QID: P905

A properly calibrated differential pressure-type water flow detector is located several feet below a horizontal pipe containing the detector's sensing element. The detector was removed for inspection and then reconnected to the sensing element with its low-pressure sensing line filled with air and its high-pressure sensing line filled with water.

When the water system is operating, indicated flow rate will be...

A. zero.

B. equal to actual flow rate.

C. lower than actual flow rate.

D. higher than actual flow rate.

ANSWER: D.

TOPIC: 191002
KNOWLEDGE: K1.04 [2.7/2.7]
QID: P8 (B607)

How will flow rate indication be affected if the equalizing valve for the associated differential pressure detector is fully opened?

A. Increase temporarily, then return to initial value.

B. Decrease temporarily, then return to initial value.

C. Increase to the maximum value.

D. Decrease to the minimum value.

ANSWER: D.

TOPIC: 191002
KNOWLEDGE: K1.04 [2.7/2.7]
QID: P307 (B307)

A differential pressure flow detector is connected to a calibrated orifice in a cooling water system. Which one of the following will cause indicated volumetric flow rate to be lower than actual volumetric flow rate?

A. System pressure decreases.

B. The orifice erodes over time.

C. Debris becomes lodged in the orifice.

D. A leak develops in the low pressure sensing line.

ANSWER: B.

TOPIC: 191002
KNOWLEDGE: K1.04 [2.7/2.7]
QID: P706 (B707)

Flow rate is being measured using a differential pressure flow detector and a calibrated orifice. If actual flow rate remains constant, which one of the following will cause indicated flow rate to be higher than actual flow rate?

A. The flow detector equalizing valve is inadvertently opened.

B. A leak develops in the high pressure sensing line.

C. Debris becomes lodged in the orifice.

D. The orifice erodes over time.

ANSWER: C.

TOPIC: 191002
KNOWLEDGE: K1.04 [2.7/2.7]
QID: P1007 (B1907)

Refer to the drawing of a pipe elbow used for flow measurement in a cooling water system (see figure below).

A differential pressure (D/P) flow detector is connected to instrument lines A and B.

If instrument line A develops a leak, indicated flow rate will _____ due to a _____ measured D/P.

A. increase; larger

B. increase; smaller

C. decrease; larger

D. decrease; smaller

ANSWER: D.

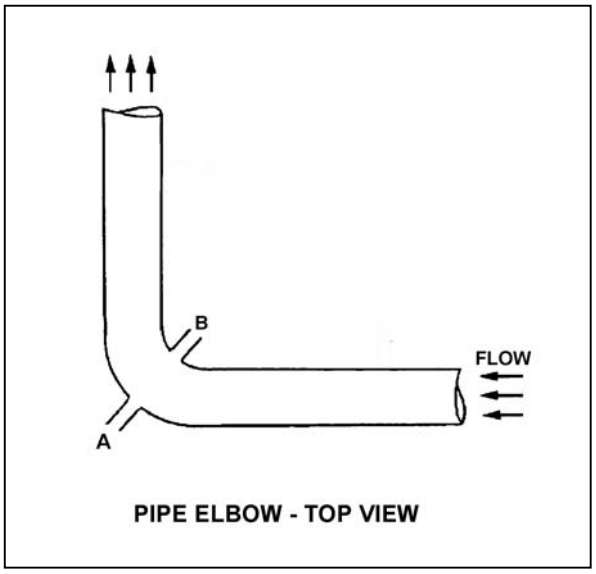

TOPIC: 191002
KNOWLEDGE: K1.04 [2.7/2.7]
QID: P1205 (B1506)

If the orifice in a differential pressure (D/P) flow sensor erodes such that the orifice opening becomes larger, indicated flow rate will _____ due to a _____ D/P across the orifice. (Assume actual flow rate remains the same.)

A. increase; larger

B. increase; smaller

C. decrease; larger

D. decrease; smaller

ANSWER: D.

TOPIC: 191002
KNOWLEDGE: K1.04 [2.7/2.7]
QID: P1608 (B1608)

Refer to the drawing of a horizontal pipe elbow (top view) in an operating water system (see figure below).

Three separate differential pressure flow detectors are connected to taps A, B, C, and D as follows:

Detector	Taps
X	A and D
Y	B and D
Z	C and D

Assuming zero head loss in this section of pipe, how will the detectors be affected if tap D ruptures?

A. All detectors will fail low.

B. All detectors will fail high.

C. Two detectors will fail low and one will fail high.

D. Two detectors will fail high and one will fail low.

ANSWER: A.

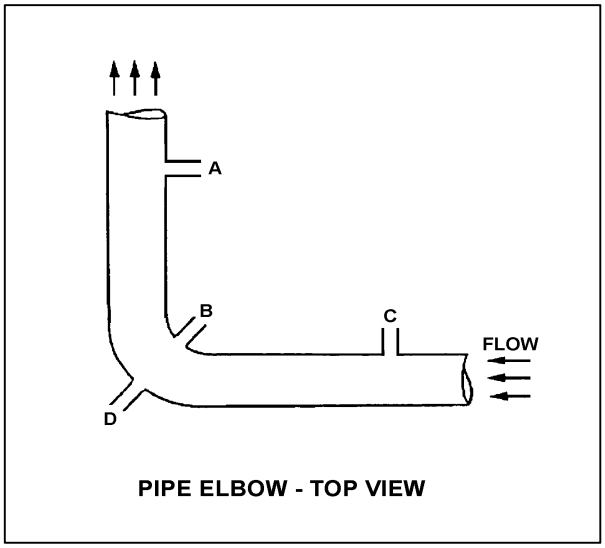

TOPIC: 191002
KNOWLEDGE: K1.04 [2.7/2.7]
QID: P2107 (B2209)

Refer to the drawing of a pipe elbow used for flow measurement in a cooling water system (see figure below).

A differential pressure (D/P) flow detector is connected to instrument lines A and B.

If instrument line B develops a leak, indicated flow rate will _____ due to a _____ measured D/P.

A. increase; larger

B. increase; smaller

C. decrease; larger

D. decrease; smaller

ANSWER: A.

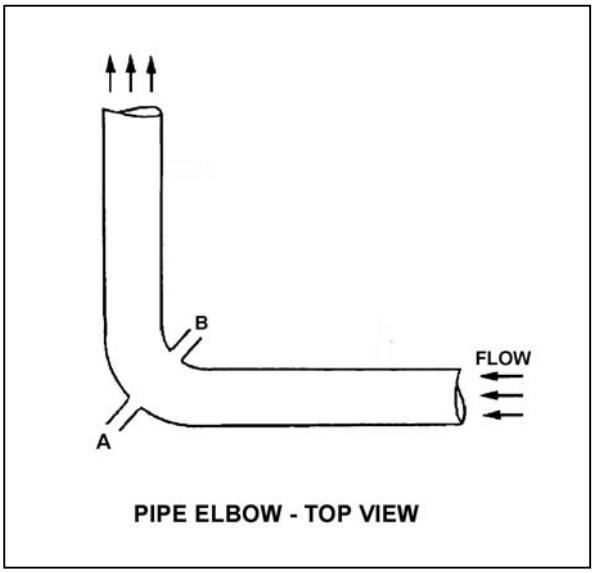

TOPIC: 191002
KNOWLEDGE: K1.04 [2.7/2.7]
QID: P2305 (B2310)

An orifice is being used in an operating cooling water system to measure flow rate. Which one of the following will cause the differential pressure sensed across the orifice to decrease?

A. System pressure decreases.

B. System flow rate decreases.

C. Debris becomes lodged in the orifice.

D. A leak develops in the low pressure sensing line.

ANSWER: B.

TOPIC: 191002
KNOWLEDGE: K1.04 [2.7/2.7]
QID: P2307 (B2307)

Refer to the drawing of a horizontal pipe elbow (top view) in an operating water system (see figure below). Three separate bellows differential pressure flow detectors are connected to taps A, B, C, and D as follows:

Detector	Taps
X	A and D
Y	B and D
Z	C and D

Assume that water is incompressible and there is no head loss in this section of pipe. How will the detectors be affected if system flow rate remains the same while system pressure increases from 1000 psig to 1200 psig?

A. All detectors will indicate higher flow.

B. Only two detectors will indicate higher flow.

C. Only one detector will indicate higher flow.

D. Detector indication will not change.

ANSWER: D.

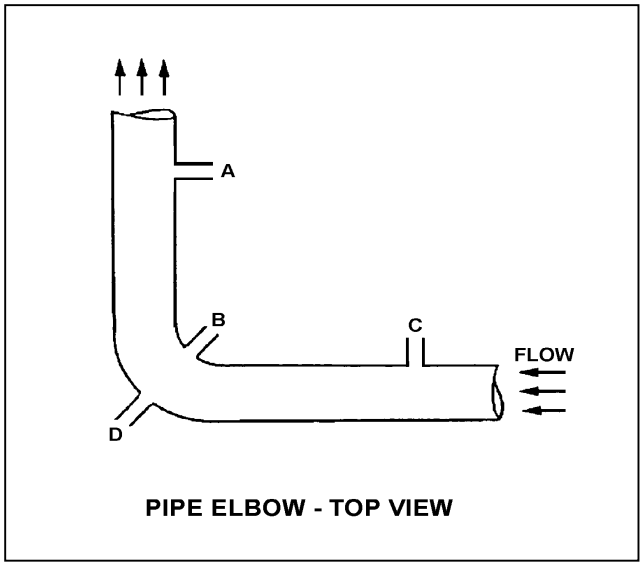

TOPIC: 191002
KNOWLEDGE: K1.04 [2.7/2.7]
QID: P2807 (B1007)

Refer to the drawing of a pipe elbow (top view) in an operating water system (see figure below).

At which one of the following locations is the highest pressure sensed? (Assume a constant pipe diameter and zero head loss in this section of pipe.)

A. Point A

B. Point B

C. Point C

D. Point D

ANSWER: C.

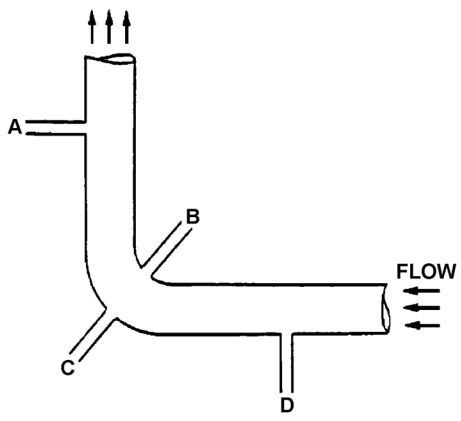

PIPE ELBOW - TOP VIEW

TOPIC: 191002
KNOWLEDGE: K1.04 [2.7/2.7]
QID: P2905 (B3108)

Refer to the drawing of a horizontal pipe elbow (top view) in an operating water system (see figure below).

Three separate bellows-type differential pressure flow detectors are connected to taps A, B, C, and D as follows:

Detector	Taps
X	A and D
Y	B and D
Z	C and D

Assuming zero head loss in this section of pipe, how will the detectors be affected if tap B experiences a significant leak? (Assume water system pressure does not change.)

A. All detectors will fail low.

B. All detectors will fail high.

C. Only one detector will fail, and it will fail low.

D. Only one detector will fail, and it will fail high.

ANSWER: D.

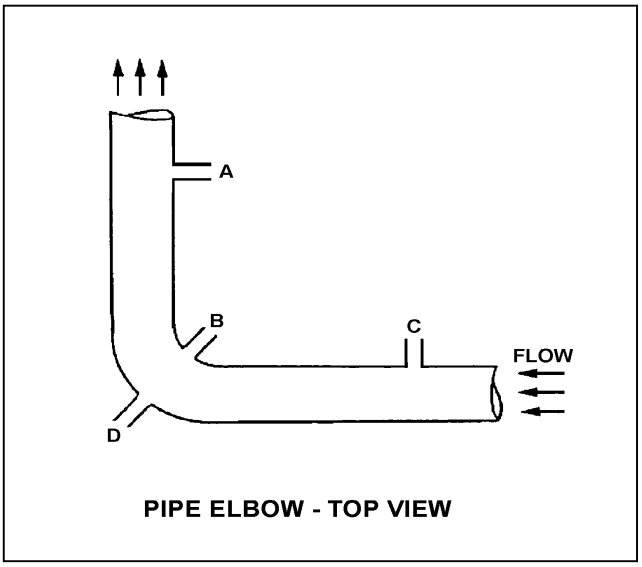

TOPIC: 191002
KNOWLEDGE: K1.05 [2.6/2.8]
QID: P9

Flow detectors (such as an orifice, flow nozzle, and venturi tube) measure flow rate using the principle that the flow rate of a liquid is...

A. directly proportional to the differential pressure (D/P) squared.

B. inversely proportional to the D/P squared.

C. directly proportional to the square root of the D/P.

D. inversely proportional to the square root of the D/P.

ANSWER: C.

TOPIC: 191002
KNOWLEDGE: K1.05 [2.6/2.8]
QID: P308 (B305)

A cooling water system is operating at steady-state conditions indicating 900 gpm with 60 psid across the flow transmitter venturi. If cooling water flow rate is increased to 1,800 gpm, differential pressure across the flow transmitter venturi will be approximately...

A. 85 psid.

B. 120 psid.

C. 175 psid.

D. 240 psid.

ANSWER: D.

TOPIC: 191002
KNOWLEDGE: K1.05 [2.6/2.8]
QID: P607 (B608)

The flow rate of water passing through a venturi can be determined by measuring the...

A. differential pressure of the water as it passes through the venturi.

B. change in the velocity of the water as it passes through the venturi.

C. linear displacement of a metering plug installed in the throat of the venturi.

D. rotation rate of a paddle wheel-type device installed in the throat of the venturi.

ANSWER: A.

TOPIC: 191002
KNOWLEDGE: K1.05 [2.6/2.8]
QID: P707 (B706)

A cooling water system is operating at a steady-state flow rate of 700 gpm with 60 psid across the flow transmitter venturi. If cooling water flow rate is increased to 1,000 gpm, differential pressure across the flow transmitter venturi will be...

A. 85.7 psid.

B. 122.4 psid.

C. 171.4 psid.

D. 244.8 psid.

ANSWER: B.

TOPIC: 191002
KNOWLEDGE: K1.05 [2.6/2.8]
QID: P807 (B807)

Refer to the drawing of a venturi flow element (see figure below) with direction of water flow indicated by the arrow.

Where should the high pressure tap of a differential pressure flow detector be connected?

A. Point A

B. Point B

C. Point C

D. Point D

ANSWER: A.

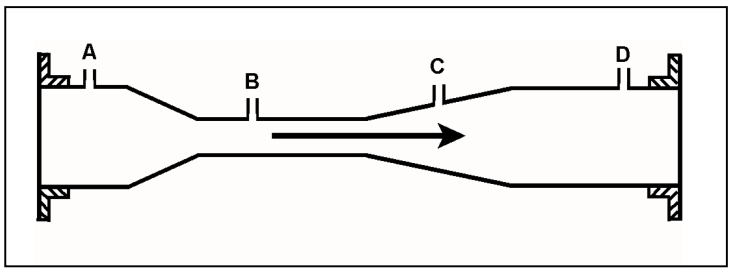

TOPIC: 191002
KNOWLEDGE: K1.05 [2.6/2.8]
QID: P907 (B1905)

A differential pressure (D/P) detector is being used with a venturi to measure main steam flow rate. With a steam flow rate of 5 x 10^6 lbm/hr, the measured D/P is 40 psid.

If steam flow changes such that the current D/P is 30 psid, what is the approximate current steam flow rate? (Assume that main steam pressure at the inlet of the venturi remains constant.)

A. 2.1 x 10^6 lbm/hr

B. 3.5 x 10^6 lbm/hr

C. 3.7 x 10^6 lbm/hr

D. 4.3 x 10^6 lbm/hr

ANSWER: D.

TOPIC: 191002
KNOWLEDGE: K1.05 [2.6/2.8]
QID: P908 (B2106)

Which one of the following flow measuring elements produces the largest unrecoverable head loss when used in an operating fluid system?

A. Venturi

B. Flow nozzle

C. Pipe elbow

D. Orifice

ANSWER: D.

TOPIC: 191002
KNOWLEDGE: K1.05 [2.6/2.8]
QID: P1106 B3306)

Refer to the drawing of a venturi flow element in an operating cooling water system (see figure below).

At what point does the lowest pressure occur?

A. Point A

B. Point B

C. Point C

D. Point D

ANSWER: B.

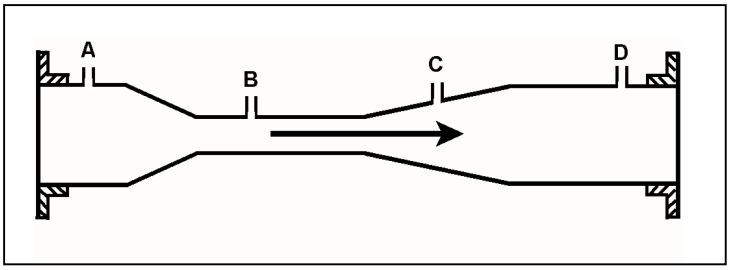

TOPIC: 191002
KNOWLEDGE: K1.05 [2.6/2.8]
QID: P1308 (B907)

Refer to the drawing of a venturi flow element in an operating cooling water system (see figure below).

A differential pressure detector measuring flow rate through the venturi will produce the highest flow rate indication if its high-pressure tap is connected at point _____; and its low-pressure tap is connected at point _____.

A. A; B

B. A; D

C. B; C

D. B; D

ANSWER: A.

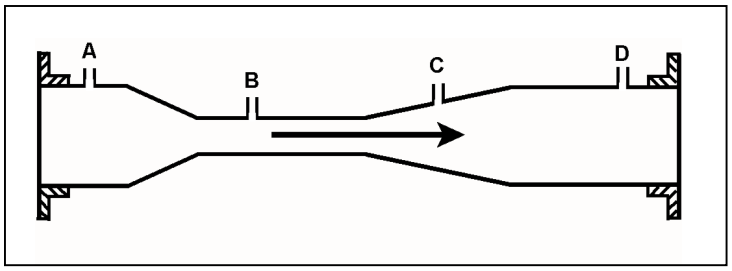

TOPIC: 191002
KNOWLEDGE: K1.05 [2.6/2.8]
QID: P1407

A cooling water system is operating at a steady-state flow rate of 500 gpm with 60 psid across the associated venturi flow element. If cooling water flow rate increases to 1,000 gpm, the differential pressure sensed by the venturi flow element will be approximately...

A. 85 psid.

B. 120 psid.

C. 240 psid.

D. 480 psid.

ANSWER: C.

TOPIC: 191002
KNOWLEDGE: K1.05 [2.6/2.8]
QID: P1606 (B407)

Refer to the drawing in which water is flowing through a convergent-divergent venturi (see figure below). The pipe diameters at P1 and P2 are equal.

Compared to the conditions at the inlet of the venturi (P1), the pressure at the outlet of the venturi (P2) has _____; and water velocity at the outlet of the venturi has _____. (Assume "real" conditions.)

A. remained the same; remained the same

B. remained the same; decreased slightly

C. decreased slightly; remained the same

D. decreased slightly; decreased slightly

ANSWER: C.

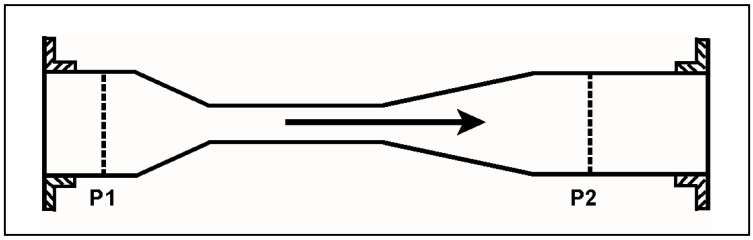

TOPIC: 191002
KNOWLEDGE: K1.05 [2.6/2.8]
QID: P1808

Water is flowing through a venturi flow element. At the throat of the venturi, the _____ water pressure and the _____ water velocity occurs.

A. highest; highest

B. lowest; lowest

C. lowest; highest

D. highest; lowest

ANSWER: C.

TOPIC: 191002
KNOWLEDGE: K1.05 [2.6/2.8]
QID: P1873 (B1773)

Water is flowing through each of the following devices. Which one of the devices will produce an outlet pressure that is greater than the inlet pressure?

A. Convergent nozzle

B. Divergent nozzle

C. Orifice

D. Flow restrictor

ANSWER: B.

TOPIC: 191002
KNOWLEDGE: K1.05 [2.6/2.8]
QID: P1906 (B1408)

Refer to the drawing of a pipe elbow (top view) in an operating water system (see figure below).

At which one of the following pairs of connection points will the greatest differential pressure be sensed? (Assume a constant pipe diameter and zero head loss in this section of pipe.)

A. Points A and B

B. Points B and C

C. Points C and D

D. Points D and A

ANSWER: B.

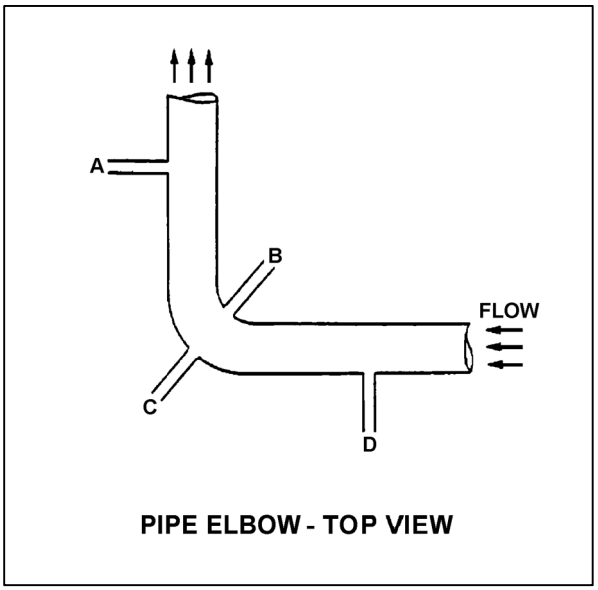

TOPIC: 191002
KNOWLEDGE: K1.05 [2.6/2.8]
QID: P2306 (B2306)

A venturi is being used to measure the flow rate in a cooling water system. As the water flows from the throat to the discharge of the venturi, water pressure will _____; and volumetric flow rate will _____.

A. increase; remain the same

B. increase; increase

C. decrease; remain the same

D. decrease; decrease

ANSWER: A.

TOPIC: 191002
KNOWLEDGE: K1.05 [2.6/2.8]
QID: P2406 (B2206)

A cooling water system is operating at a steady-state flow rate of 700 gpm with 60 psid across the associated venturi flow element. If cooling water flow rate increases to 900 gpm, the differential pressure sensed by the venturi flow element will be approximately...

A. 68 psid.

B. 77 psid.

C. 99 psid.

D. 127 psid.

ANSWER: C.

TOPIC: 191002
KNOWLEDGE: K1.05 [2.6/2.8]
QID: P2505 (B2506)

A main steam flow rate measuring instrument uses a steam pressure input to produce main steam mass flow rate indication. Assuming steam volumetric flow rate does not change, a steam pressure decrease will cause indicated steam mass flow rate to...

A. increase, because the density of the steam has increased.

B. decrease, because the density of the steam has decreased.

C. remain the same, because steam pressure does not affect the mass flow rate of steam.

D. remain the same, because the steam pressure input compensates for changes in steam pressure.

ANSWER: B.

TOPIC: 191002
KNOWLEDGE: K1.05 [2.6/2.8]
QID: P2507 (B2508)

A differential pressure detector is being used with an orifice plate to measure water flow rate through a pipe. When the flow detector was last calibrated, the following parameters were observed:

Upstream Pressure = 125 psig
Downstream Pressure = 116 psig

Actual Flow Rate = 100 gpm
Indicated Flow Rate = 100 gpm

Significant erosion of the orifice has occurred since the calibration such that actual flow rate through the orifice has increased to 120 gpm while the upstream and downstream pressures have changed to 110 psig and 106 psig respectively.

What is the approximate flow rate that is currently indicated?

A. 44 gpm

B. 67 gpm

C. 81 gpm

D. 120 gpm

ANSWER: B.

TOPIC: 191002
KNOWLEDGE: K1.05 [2.6/2.8]
QID: P2606

A cooling water system is operating at steady-state conditions at 900 gpm with 64 psid across the flow transmitter venturi. Cooling water flow rate changes such that venturi differential pressure decreases to 36 psid.

Which one of the following is the new system flow rate?

A. 506 gpm

B. 576 gpm

C. 675 gpm

D. 745 gpm

ANSWER: C.

TOPIC: 191002
KNOWLEDGE: K1.05 [2.6/2.8]
QID: P2808 (B2806)

A differential pressure detector is being used with an orifice plate to measure water flow rate through a pipe. When the flow detector was last calibrated, the following parameters were observed:

Upstream Pressure = 135 psig
Downstream Pressure = 120 psig

Actual Flow Rate = 100 gpm
Indicated Flow Rate = 100 gpm

Significant erosion of the orifice hole has occurred since the last calibration, such that actual flow rate through the orifice has increased to 120 gpm while the upstream and downstream pressures have changed to 124 psig and 109 psig respectively.

What is the currently indicated flow rate?

A. 44 gpm

B. 67 gpm

C. 100 gpm

D. 120 gpm

ANSWER: C.

TOPIC: 191002
KNOWLEDGE: K1.05 [2.6/2.8]
QID: P3207 (B3206)

A cooling water system uses a horizontal venturi with a differential pressure flow detector to provide flow rate indication. Water enters and leaves the venturi at 70°F, 120 psig, and 20 ft/sec. Water velocity at the throat of the venturi is 45 ft/sec. Assume water is incompressible and the venturi experiences no unrecoverable head loss.

What is the approximate pressure of the water at the throat of the venturi?

A. 109 psig

B. 98 psig

C. 86 psig

D. 71 psig

ANSWER: A.

TOPIC: 191002
KNOWLEDGE: K1.05 [2.6/2.8]
QID: P3306 (B2010)

A cooling water system is operating at steady-state conditions. A calibrated system flow meter indicates 600 gpm with 50 psid across the flow element.

If cooling water flow rate increases to 900 gpm, the differential pressure sensed by the flow element will be approximately...

A. 63 psid.

B. 75 psid.

C. 97 psid.

D. 112 psid.

ANSWER: D.

TOPIC: 191002
KNOWLEDGE: K1.05 [2.6/2.8]
QID: P3706 (B3706)

The following is the current calibration data for an orifice plate that is being used for water flow rate measurement:

Upstream Pressure = 135 psig
Downstream Pressure = 120 psig
Flow Rate = 100 gpm

During a surveillance, the following pressures are observed across the orifice plate:

Upstream Pressure = 124 psig
Downstream Pressure = 117 psig

What is the approximate water flow rate through the orifice plate?

A. 47 gpm

B. 57 gpm

C. 68 gpm

D. 78 gpm

ANSWER: C.

TOPIC: 191002
KNOWLEDGE: K1.05 [2.6/2.8]
QID: P3807 (B3807)

Refer to the drawing of a differential pressure manometer (see figure below).

The manometer is filled with water and installed across an orifice in a ventilation duct to determine the rate of air flow. The manometer is currently indicating a water level difference of 16 inches at an air flow rate of 300 ft^3/min.

Which one of the following will be the approximate rate of air flow when the manometer indicates a water level difference of 4 inches?

A. 75 ft^3/min.

B. 125 ft^3/min.

C. 150 ft^3/min.

D. 175 ft^3/min.

ANSWER: C.

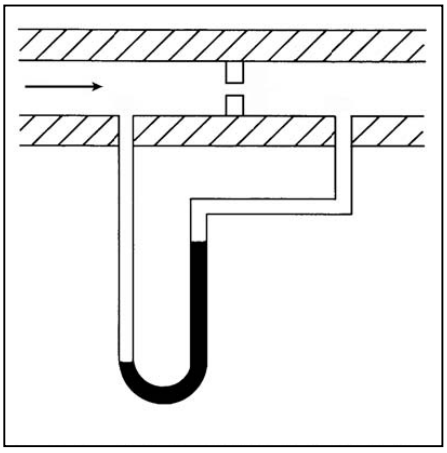

TOPIC: 191002
KNOWLEDGE: K1.05 [2.6/2.8]
QID: P4003 (B4005)

A differential pressure detector is being used with an orifice plate to measure water flow rate through a pipe. When the flow instrument was last calibrated, the following parameters were observed:

Upstream Pressure	= 125 psig	Actual Flow Rate	= 100 gpm
Downstream Pressure	= 116 psig	Indicated Flow Rate	= 100 gpm

Since the calibration, debris has collected in the orifice such that the actual flow rate through the orifice has decreased to 80 gpm while the upstream and downstream pressures have changed to 135 psig and 110 psig, respectively.

What is the approximate flow rate that is currently indicated by the flow instrument?

A. 125 gpm

B. 133 gpm

C. 156 gpm

D. 167 gpm

ANSWER: D.

TOPIC: 191002
KNOWLEDGE: K1.05 [2.6/2.8]
QID: P4604 (B4605)

Refer to the drawing of a differential pressure manometer (see figure below).

The manometer is filled with water and installed across an orifice in a ventilation duct to determine the rate of air flow. The manometer is currently indicating a water level difference of 8 inches at an air flow rate of 300 cubic feet per minute (ft^3/min).

Which one of the following will be the approximate air flow rate when the manometer indicates a water level difference of 4 inches?

A. 75 ft^3/min

B. 150 ft^3/min

C. 188 ft^3/min

D. 212 ft^3/min

ANSWER: D.

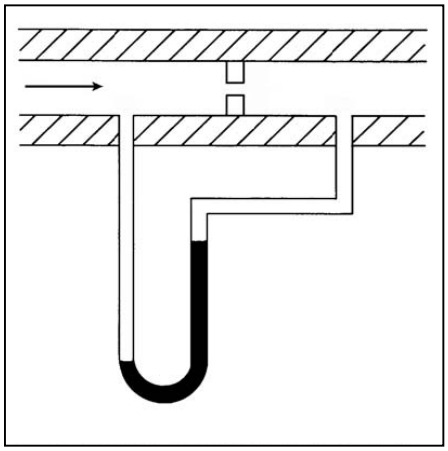

TOPIC: 191002
KNOWLEDGE: K1.05 [2.6/2.8]
QID: P4804 (B4804)

A cooling water system uses a horizontal venturi with a differential pressure flow detector to provide flow rate indication. Water enters and leaves the venturi at 70°F, 100 psig, and 24 ft/sec. Water velocity at the throat of the venturi is 50 ft/sec. Assume water is incompressible and the venturi experiences no unrecoverable head loss.

What is the approximate pressure of the water at the throat of the venturi?

A. 98 psig

B. 94 psig

C. 87 psig

D. 74 psig

ANSWER: C.

TOPIC: 191002
KNOWLEDGE: K1.05 [2.6/2.8]
QID: P6803 (B6804)

Refer to the drawing of a frictionless venturi flow element (see figure below). Subcooled water is flowing through the venturi with the following initial conditions:

Flow rate = 500 gpm
Tap A pressure = 40 psia
Tap B pressure = 36 psia

Flow rate increases to 1,000 gpm, which results in a tap A pressure of 68 psia. What is the new pressure at tap B?

A. 60 psia

B. 52 psia

C. 44 psia

D. 32 psia

ANSWER: B.

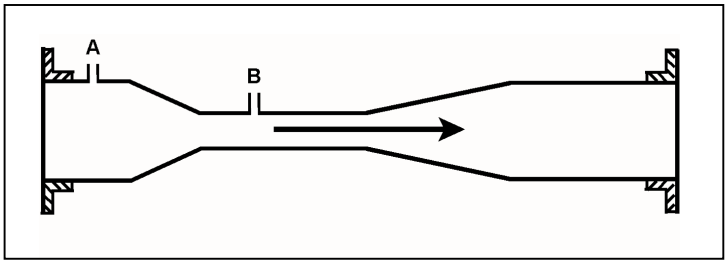

TOPIC: 191002
KNOWLEDGE: K1.05 [2.6/2.8]
QID: P7632 (B7632)

Refer to the drawing of a frictionless venturi flow element (see figure below). Subcooled water is flowing through the venturi with the following initial conditions:

Flow rate = 500 gpm
Tap A pressure = 40 psia
Tap B pressure = 36 psia

When flow rate is increased to 750 gpm, the pressure at tap A increases to 68 psia. What is the new pressure at tap B?

A. 66 psia

B. 62 psia

C. 59 psia

D. 52 psia

ANSWER: C.

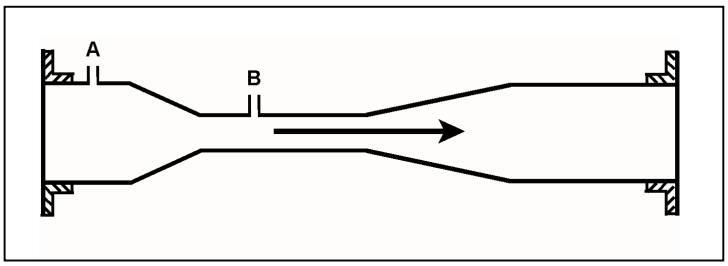

TOPIC: 191002
KNOWLEDGE: K1.05 [2.6/2.8]
QID: P7681 (B7681)

Refer to the drawing of a frictionless venturi flow element (see figure below). Subcooled water is flowing through the venturi with the following initial conditions:

Flow rate = 500 gpm
Tap A pressure = 48 psia
Tap B pressure = 44 psia

When flow rate is increased to 900 gpm, the pressure at tap A increases to 62 psia. What is the new pressure at tap B?

A. 46 psia

B. 49 psia

C. 55 psia

D. 60 psia

ANSWER: B.

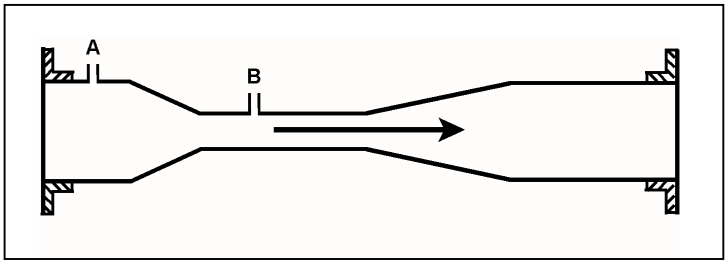

TOPIC: 191002
KNOWLEDGE: K1.06 [2.5/2.6]
QID: P208 (B909)

Refer to the drawing of a water storage tank with a differential pressure (D/P) level detector (see figure below).

The associated level instrument was calibrated with the water storage tank at 100°F. If mass in the tank remains constant and the water temperature increases to 120°F, the indicated level will...

A. remain the same although actual level increases.

B. increase but remain less than actual level.

C. decrease in direct proportion to the temperature rise.

D. increase in direct proportion to the temperature rise.

ANSWER: A.

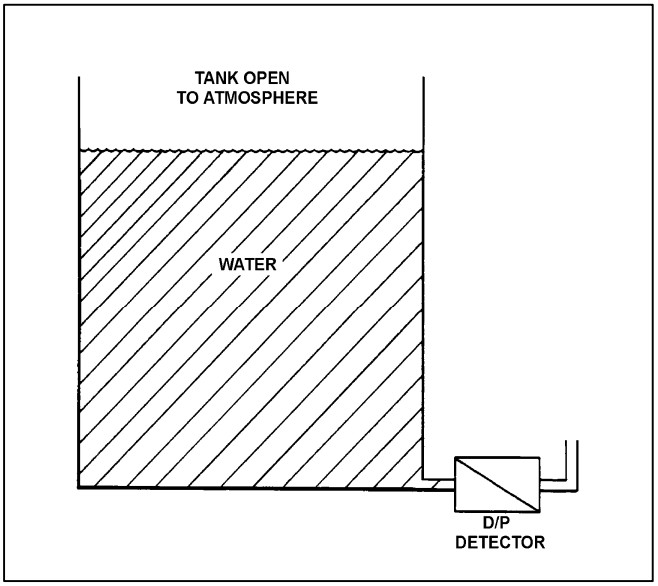

TOPIC: 191002
KNOWLEDGE: K1.06 [2.5/2.6]
QID: P411

Refer to the drawing of a pressurizer differential pressure (D/P) level detection system (see figure below). The pressurizer level instrument was calibrated while the plant was in a cold shutdown condition.

When the plant is returned to normal operating conditions, pressurizer level will indicate _____ than actual level because a given pressurizer level at normal operating conditions produces a _____ D/P compared to cold shutdown conditions.

A. higher; smaller

B. higher; larger

C. lower; smaller

D. lower; larger

ANSWER: D.

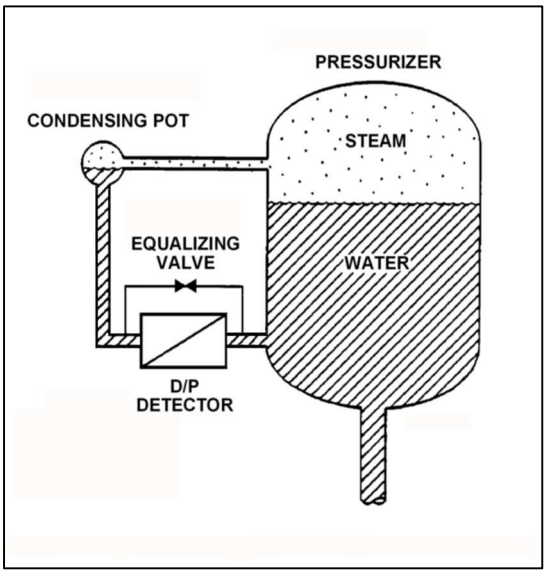

TOPIC: 191002
KNOWLEDGE: K1.06 [2.5/2.6]
QID: P507

Refer to the drawing of a water storage tank with a differential pressure level detector that was recently calibrated at a tank water temperature of 80°F (see figure below).

If the mass of the water in the tank remains the same while the tank water temperature is raised from 80°F to 150°F, the indicated level will...

A. remain equal to actual level.

B. increase, due to the expansion of the water.

C. remain the same.

D. decrease, due to the expansion of the water.

ANSWER: C.

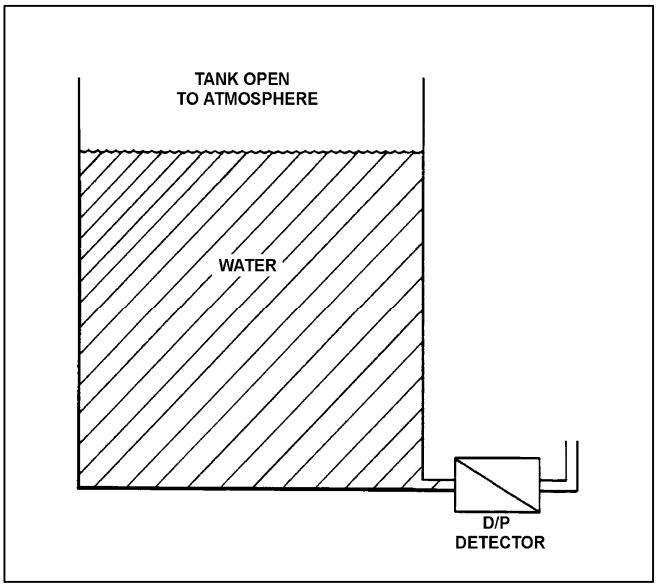

TOPIC: 191002
KNOWLEDGE: K1.06 [2.5/2.6]
QID: P608

Refer to the drawing of a water storage tank with two tank differential pressure (D/P) level indicators (see figure below).

Two D/P level indicators are installed on a large water storage tank. Indicator 1 was calibrated at 100°F water temperature and indicator 2 was calibrated at 200°F water temperature.

Assuming both indicators are on scale, which indicator will indicate the higher level?

A. Indicator 1 at all water temperatures

B. Indicator 2 at all water temperatures

C. Indicator 1 below 150°F, indicator 2 above 150°F

D. Indicator 2 below 150°F, indicator 1 above 150°F

ANSWER: B.

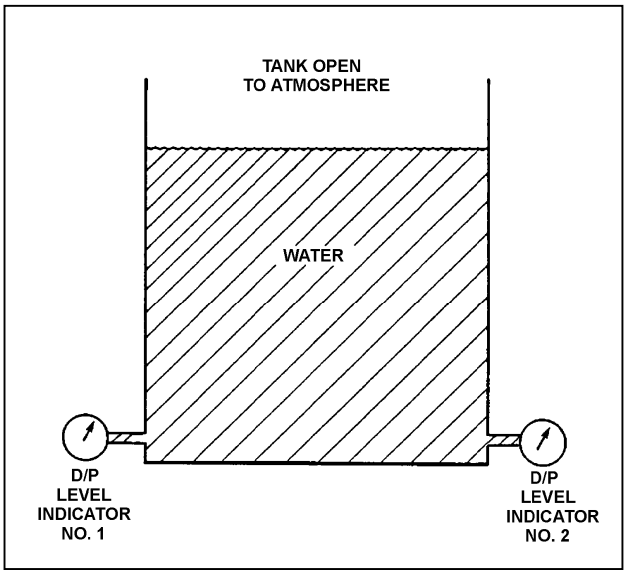

TOPIC: 191002
KNOWLEDGE: K1.06 [2.5/2.6]
QID: P808 (B809)

Refer to the drawing of a water storage tank with a differential pressure (D/P) level detection system (see figure below).

The level detector is being used in a level control system that was calibrated to maintain tank level at 80 percent when the tank water temperature was 100°F. If tank water temperature gradually increases and stabilizes at 150°F, the level control system will cause actual tank level to...

A. remain stable at 80 percent.

B. increase and stabilize above 80 percent.

C. oscillate and then stabilize at 80 percent.

D. decrease and stabilize below 80 percent.

ANSWER: B.

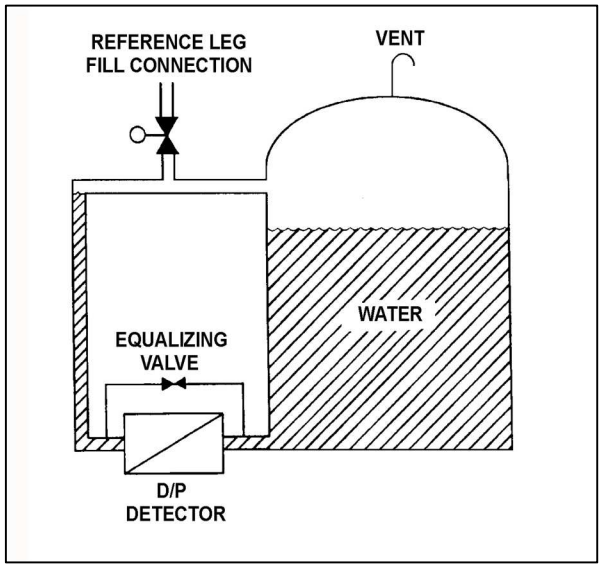

TOPIC: 191002
KNOWLEDGE: K1.06 [2.5/2.6]
QID: P1107 (B1507)

Refer to the drawing of a water storage tank with two tank differential pressure (D/P) level indicators (see figure below).

Two D/P level indicators are installed on a large water storage tank. Indicator 1 was calibrated at 100°F water temperature and indicator 2 was calibrated at 200°F water temperature.

Assuming both indicators are on scale, which indicator will indicate the lower level?

A. Indicator 1 at all water temperatures

B. Indicator 2 at all water temperatures

C. Indicator 1 below 150°F, indicator 2 above 150°F

D. Indicator 2 below 150°F, indicator 1 above 150°F

ANSWER: A.

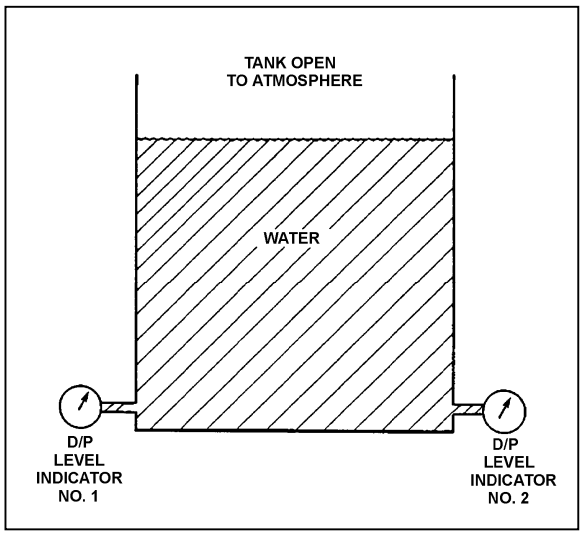

TOPIC: 191002
KNOWLEDGE: K1.06 [2.5/2.6]
QID: P1706 (B1706)

Refer to the drawing of a water storage tank with two differential pressure (D/P) level indicators (see figure below).

Two D/P level indicators are installed on a large water storage tank. Indicator No. 1 was calibrated at 200°F water temperature and indicator No. 2 was calibrated at 100°F water temperature.

Assuming both indicators are on scale, which indicator will indicate the lower level?

A. Indicator 1 at all water temperatures.

B. Indicator 2 at all water temperatures.

C. Indicator 1 below 150°F, indicator 2 above 150°F.

D. Indicator 2 below 150°F, indicator 1 above 150°F.

ANSWER: B.

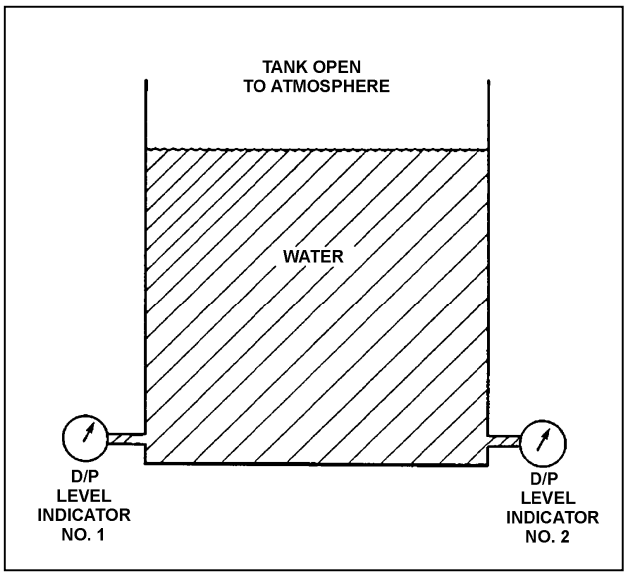

TOPIC: 191002
KNOWLEDGE: K1.06 [2.5/2.6]
QID: P1907 (B4205)

Refer to the drawing of a water storage tank with two differential pressure (D/P) level indicators (see figure below).

Indicator 1 was calibrated at 120°F and indicator 2 was calibrated at 180°F. If tank water temperature is currently 150°F, then indicator...

A. 1 will read greater than indicator 2, and greater than actual level.

B. 1 will read greater than indicator 2, and less than actual level.

C. 2 will read greater than indicator 1, and greater than actual level.

D. 2 will read greater than indicator 1, and less than actual level.

ANSWER: C.

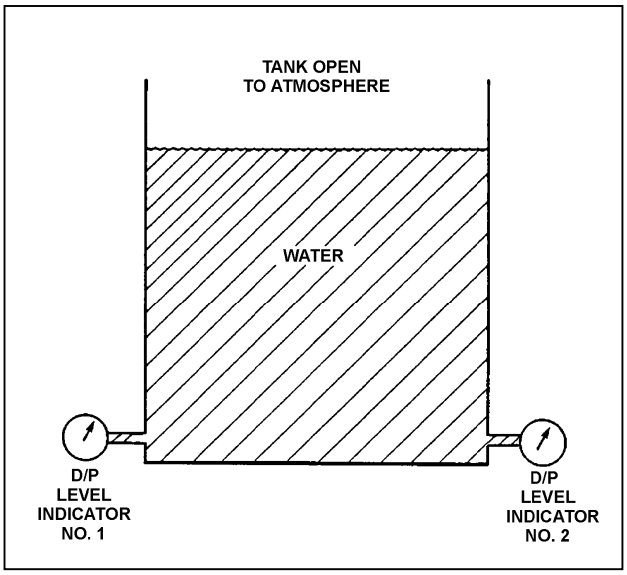

TOPIC: 191002
KNOWLEDGE: K1.06 [2.5/2.6]
QID: P2108 (B2408)

Refer to the drawing of a water storage tank with two differential pressure (D/P) level indicators (see figure below).

Indicator 1 was calibrated at 180°F and indicator 2 was calibrated at 120°F. If tank water temperature is 150°F, then indicator...

A. 1 will read greater than indicator 2, and greater than actual water level.

B. 1 will read greater than indicator 2, and less than actual water level.

C. 2 will read greater than indicator 1, and greater than actual water level.

D. 2 will read greater than indicator 1, and less than actual water level.

ANSWER: A.

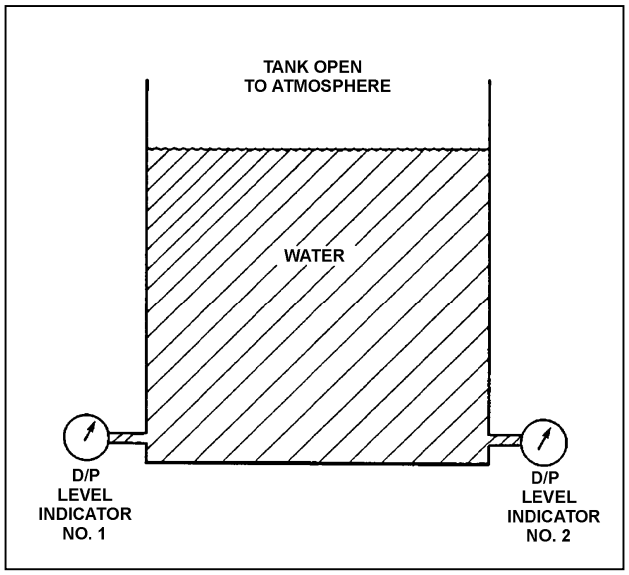

TOPIC: 191002
KNOWLEDGE: K1.06 [2.5/2.6]
QID: P2308 (B2308)

Refer to the drawing of a steam generator differential pressure (D/P) level detection system that was calibrated at normal operating conditions (see figure below).

A reactor coolant system cooldown has resulted in a decrease in steam generator pressure from 900 psia to 400 psia in one hour. Without density compensation of the level instrumentation, at the end of the cooldown steam generator level indication would indicate _____ than actual level because the density of the water in the _____ has changed significantly.

A. higher; reference leg

B. higher; steam generator

C. lower; reference leg

D. lower; steam generator

ANSWER: B.

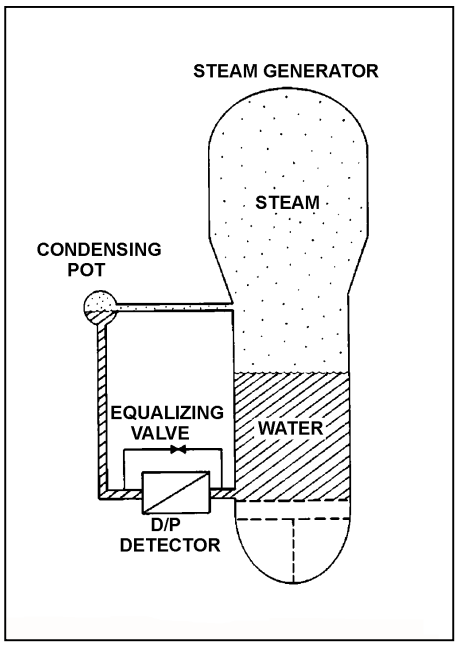

TOPIC: 191002
KNOWLEDGE: K1.06 [2.5/2.6]
QID: P2509

Refer to the drawing of a steam generator (SG) differential pressure (D/P) level detection system (see figure below) that was calibrated at the current SG pressure of 400 psia.

A reactor coolant system heatup has resulted in an increase in SG pressure from 400 psia to 900 psia over 4 hours. The ambient air temperature surrounding the SG has remained constant.

Without density compensation of the level instrumentation, at the end of the heatup SG level indication would indicate _____ than actual level because the density of the water in the _____ has changed significantly.

A. higher; steam generator

B. higher; reference leg

C. lower; steam generator

D. lower; reference leg

ANSWER: C.

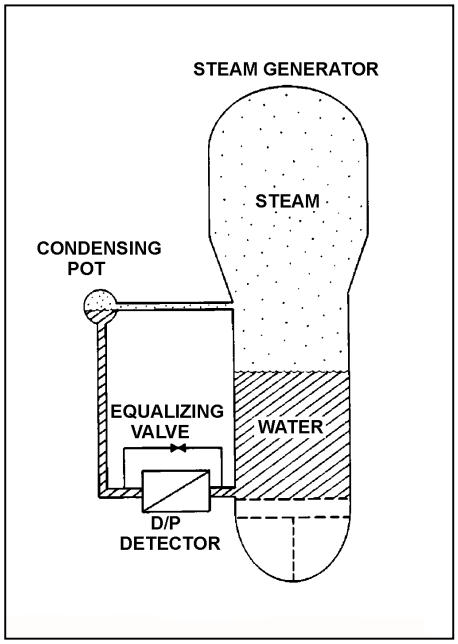

TOPIC: 191002
KNOWLEDGE: K1.06 [2.5/2.6]
QID: P3208

A reactor is currently shut down with the reactor coolant system at 140°F and 150 psig. Pressurizer level is being monitored using a differential pressure detector with a wet reference leg. The pressurizer level instrument was calibrated at normal plant operating conditions.

The pressurizer level instrument currently indicates _____ than actual pressurizer level because, compared to the calibration conditions, there has been a significant change in the density of the fluid in the _____.

A. lower; reference leg

B. lower; pressurizer

C. higher; reference leg

D. higher; pressurizer

ANSWER: D.

TOPIC: 191002
KNOWLEDGE: K1.06 [2.5/2.6]
QID: P4104

Refer to the drawing of a pressurizer and differential pressure (D/P) level detection system that was recently calibrated at normal operating conditions (see figure below). Assume that the associated pressurizer level instrument does not use density compensation.

With the nuclear power plant shut down at reduced reactor coolant system temperature and pressure, the pressurizer level instrument will indicate _____ than actual water level because the D/P currently sensed by the D/P detector is _____ than the D/P for the same pressurizer water level at normal operating conditions.

A. lower; smaller

B. lower; larger

C. higher; smaller

D. higher; larger

ANSWER: C.

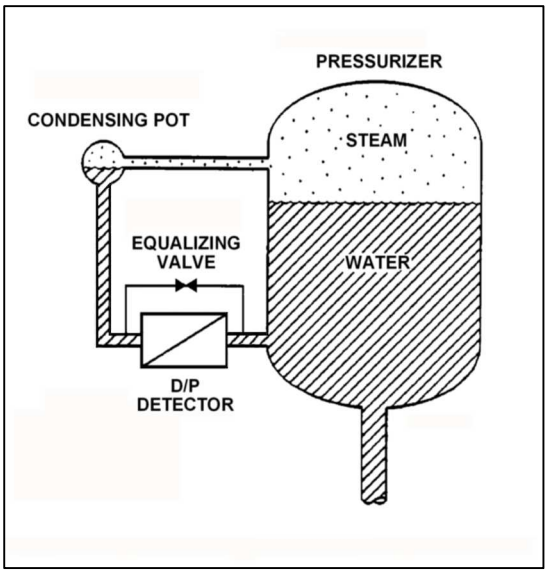

TOPIC: 191002
KNOWLEDGE: K1.06 [2.5/2.6]
QID: P4404

Refer to the drawing of a pressurizer differential pressure (D/P) level detection system (see figure below).

The associated pressurizer level instrument was recently calibrated with the nuclear power plant at normal operating conditions. Assume that the level instrument does not use density compensation.

If the plant is currently shut down at reduced reactor coolant system temperature and pressure, pressurizer water level will currently indicate _____ than actual water level because, for a given pressurizer water level, the D/P sensed by the D/P detector is currently _____.

A. higher; smaller

B. higher; larger

C. lower; smaller

D. lower; larger

ANSWER: A.

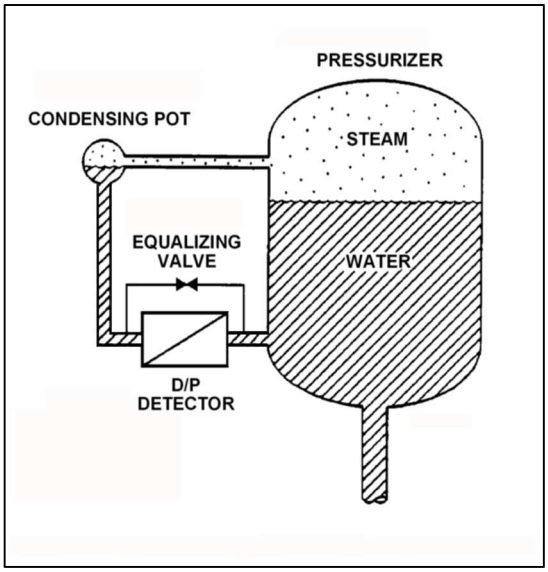

TOPIC: 191002
KNOWLEDGE: K1.06 [2.5/2.6]
QID: P4504

Refer to the drawing of a differential pressure (D/P) level detection system for a pressurizer at normal operating temperature and pressure (see figure below).

A nuclear power plant uses several differential pressure detectors like the one below to provide multiple channels of pressurizer water level indication. A hot channel was calibrated when the pressurizer was at normal operating temperature. A cold channel was calibrated when the pressurizer was at 160°F.

How will the level indications on the two channels compare when the pressurizer is at normal operating temperature?

A. The cold channel will indicate higher than the hot channel, due to the difference in reference leg water density at the two calibration temperatures.

B. The cold channel will indicate lower than the hot channel, due to the difference in reference leg water density at the two calibration temperatures.

C. The cold channel will indicate higher than the hot channel, due to the difference in pressurizer water density at the two calibration temperatures.

D. The cold channel will indicate lower than the hot channel, due to the difference in pressurizer water density at the two calibration temperatures.

ANSWER: D.

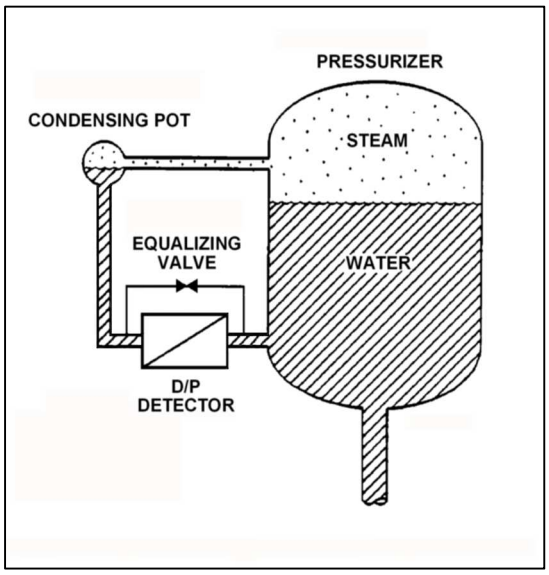

TOPIC: 191002
KNOWLEDGE: K1.06 [2.5/2.6]
QID: P6203

Refer to the drawing of a pressurizer differential pressure (D/P) level detection system (see figure below).

With the pressurizer containing saturated water and steam at 2,250 psia, pressurizer level indication is 20 feet. Assume that reference leg level and temperature do not change. Also, ignore the effect of steam density changes on level indication.

With no change in actual pressurizer level, what will level indication be at 600 psia (saturated)?

A. 14.9 feet

B. 18.3 feet

C. 22.4 feet

D. 26.8 feet

ANSWER: D.

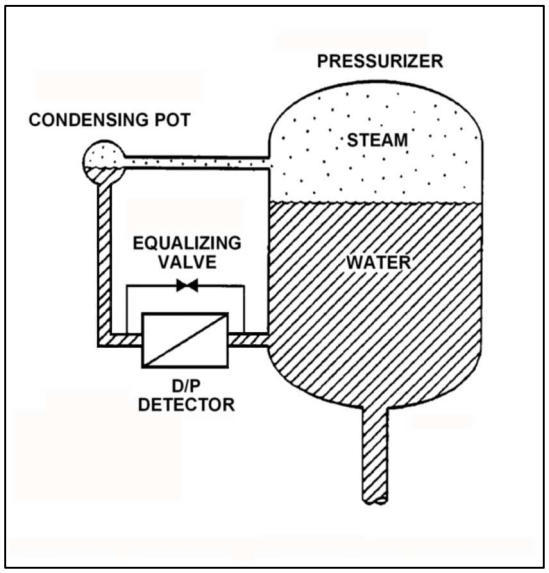

TOPIC: 191002
KNOWLEDGE: K1.07 [2.5/2.6]
QID: P410

Refer to the drawing of a water storage tank with a differential pressure (D/P) level detection system (see figure below).

If the differential pressure detector equalizing valve is opened, level indication will:

A. decrease and stabilize below actual level.

B. increase and stabilize above actual level.

C. oscillate above and below actual level.

D. remain constant at the current level.

ANSWER: B.

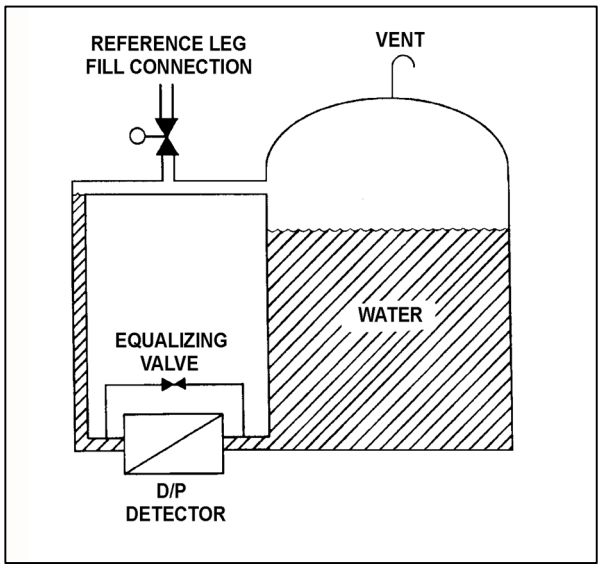

TOPIC: 191002
KNOWLEDGE: K1.07 [2.5/2.6]
QID: P708 (B2609)

Refer to the drawing of a water storage tank with a differential pressure (D/P) level detector (see figure below).

The level detector is being used in a level control system that is calibrated to maintain tank level at 75 percent at the current water temperature of 90°F. If water temperature gradually increases and stabilizes at 120°F, the level control system will cause actual tank level to...

A. remain at 75 percent.

B. increase and stabilize above 75 percent.

C. oscillate around 75 percent.

D. decrease and stabilize below 75 percent.

ANSWER: B.

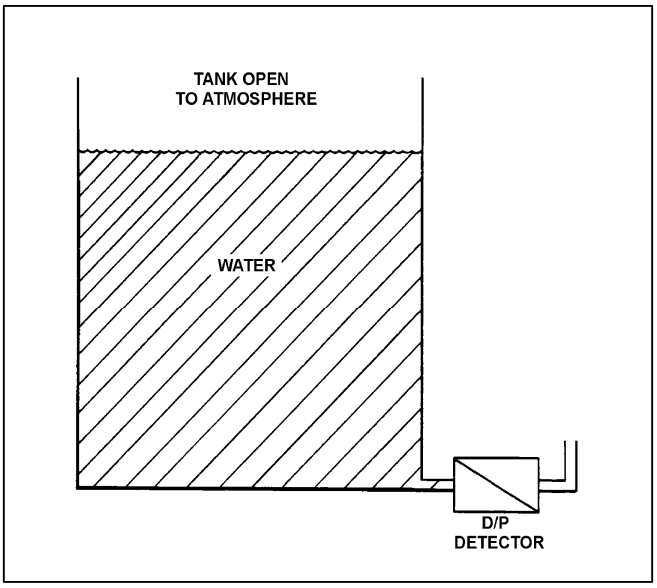

TOPIC: 191002
KNOWLEDGE: K1.07 [2.5/2.6]
QID: P910 (B910)

Refer to the drawing of a water storage tank with a differential pressure (D/P) level detection system (see figure below).

The D/P sensed by the detector varies in the _____ direction as the temperature of the water in the tank if the _____ of the tank water is constant. (Assume reference leg and tank water temperatures are initially the same.)

A. same; level

B. inverse; level

C. same; mass

D. inverse; mass

ANSWER: A.

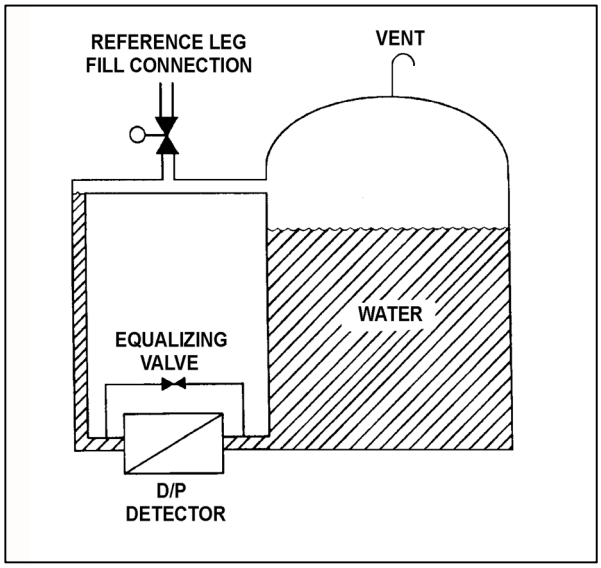

TOPIC: 191002
KNOWLEDGE: K1.07 [2.5/2.6]
QID: P1008 (B1909)

Refer to the drawing of a water storage tank with a differential pressure (D/P) level detector (see figure below).

The level detector is being used in a level control system that is calibrated to maintain tank level at 75 percent at the current water temperature of 120°F. If water temperature gradually decreases and stabilizes at 90°F, actual tank level will...

A. remain at 75 percent.

B. increase and stabilize above 75 percent.

C. oscillate around 75 percent.

D. decrease and stabilize below 75 percent.

ANSWER: D.

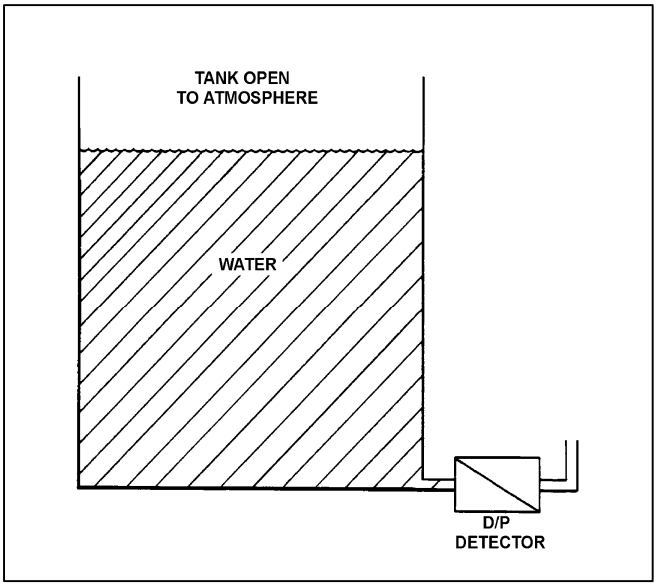

TOPIC: 191002
KNOWLEDGE: K1.07 [2.5/2.6]
QID: P1807 (B1211)

A cooling water system is cooling a lube oil heat exchanger. Cooling water system surge tank level is being measured using a differential pressure level detector that has been calibrated at the current water temperature in the tank. A leak in the heat exchanger results in lube oil collecting in the surge tank.

Assuming that the temperature of the contents in the surge tank does not change, indicated tank level will be _____ than actual tank level because lube oil is _____ than water.

A. higher; more dense

B. higher; less dense

C. lower; more dense

D. lower; less dense

ANSWER: D.

TOPIC: 191002
KNOWLEDGE: K1.07 [2.5/2.6]
QID: P2009

Many steam generator water level instruments are designed with a condensing chamber in the reference leg. The purpose of the condensing chamber is to...

A. maintain a constant water level in the reference leg during normal operations.

B. provide reference leg compensation for the steam generator pressure exerted on the variable leg.

C. prevent reference leg flashing during a rapid depressurization of the steam generator.

D. ensure the reference leg temperature remains close to the temperature of the variable leg.

ANSWER: A.

TOPIC: 191002
KNOWLEDGE: K1.07 [2.5/2.6]
QID: P3008 (B3010)

Refer to the drawing of a water storage tank with a differential pressure (D/P) level detection system (see figure below).

Assume the initial temperature of the reference leg and the water in the tank is 100°F, and that reference leg temperature does not change.

If the temperature of the water in the tank increases by 20°F, the D/P sensed by the detector will _____ as long as the water _____ is maintained constant.

A. increase; level

B. decrease; level

C. increase; mass

D. decrease; mass

ANSWER: A.

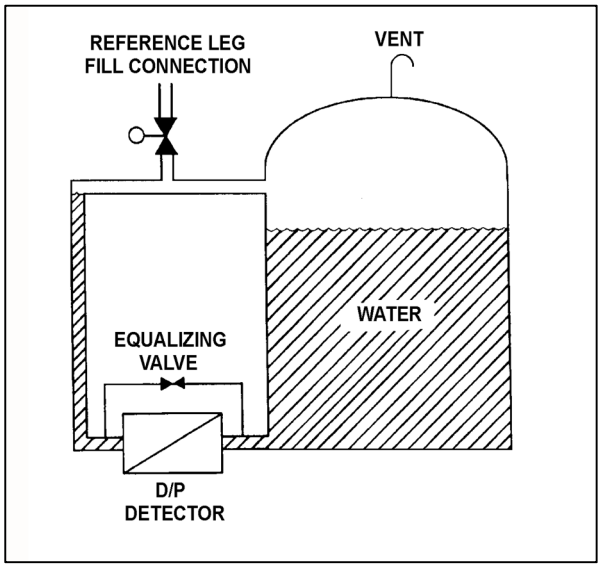

TOPIC: 191002
KNOWLEDGE: K1.07 [2.5/2.6]
QID: P3407 (B3408)

Refer to the drawing of a water storage tank with a differential pressure (D/P) level detection system (see figure below). Assume that the initial temperature of the reference leg and the water in the tank are the same, and that reference leg temperature and level do not change.

The level detector is being used in a level control system (not shown) that is calibrated to maintain tank level at 75 percent at the current tank water temperature (70°F) and pressure (5 psig).

If the tank water temperature remains constant, but the tank pressure is increased by 10 psig, the level control system will cause actual tank level to...

A. remain at 75 percent.

B. increase and stabilize above 75 percent.

C. oscillate around 75 percent.

D. decrease and stabilize below 75 percent.

ANSWER: A.

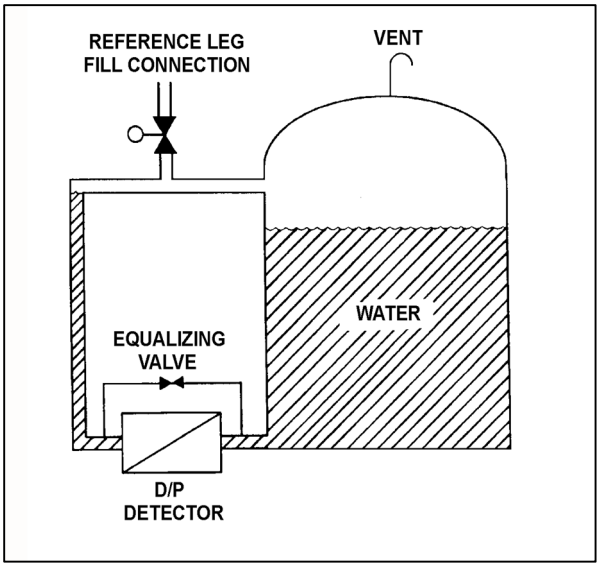

TOPIC: 191002
KNOWLEDGE: K1.07 [2.5/2.6]
QID: P5003

The downcomer region of a steam generator contains 40 feet of saturated water at 536°F. A steam generator water level detector has a pressure tap located at the bottom of the downcomer region. Approximately how much of the total pressure at the pressure tap is caused by the downcomer water?

A. 0.6 psi

B. 13.0 psi

C. 27.7 psi

D. 156.0 psi

ANSWER: B.

TOPIC: 191002
KNOWLEDGE: K1.07 [2.5/2.6]
QID: P5204

Refer to the drawing of a differential pressure (D/P) level detection system (see figure below) for a pressurizer at normal operating temperature and pressure. The level detector has just been calibrated.

The high pressure side of the detector is connected to the _____; and if the equalizing valve is opened, the indicated pressurizer level will be _____ than the actual level.

A. condensing pot; lower

B. condensing pot; higher

C. pressurizer; lower

D. pressurizer; higher

ANSWER: B.

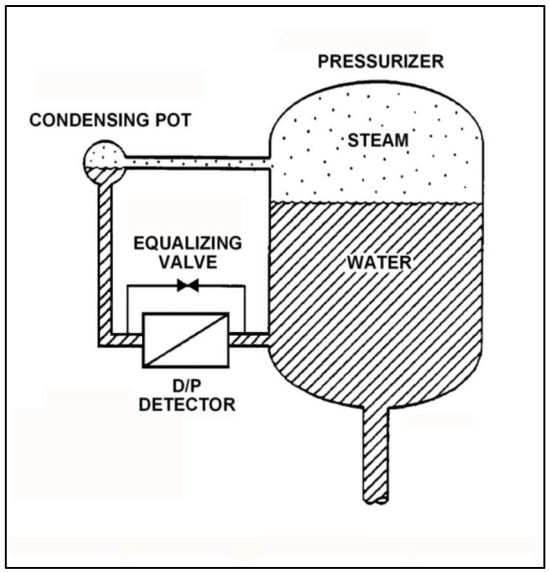

TOPIC: 191002
KNOWLEDGE: K1.07 [2.5/2.6]
QID: P6104 (B6105)

Refer to the drawing of a water storage tank with a differential pressure (D/P) level detection system (see figure below).

The D/P level detector was just calibrated and returned to operation with the following conditions:

- The reference leg contains 20 feet of water at 70°F.
- The tank contains 18 feet of water at 70°F.
- Tank level indication is 18 feet.

Assume the actual tank water level and the temperature of the water in the tank and reference leg do not change. Which one of the following will be the new tank level indication if the reference leg water level decreases to 18 feet?

A. 22 feet

B. 20 feet

C. 18 feet

D. 2 feet

ANSWER: B.

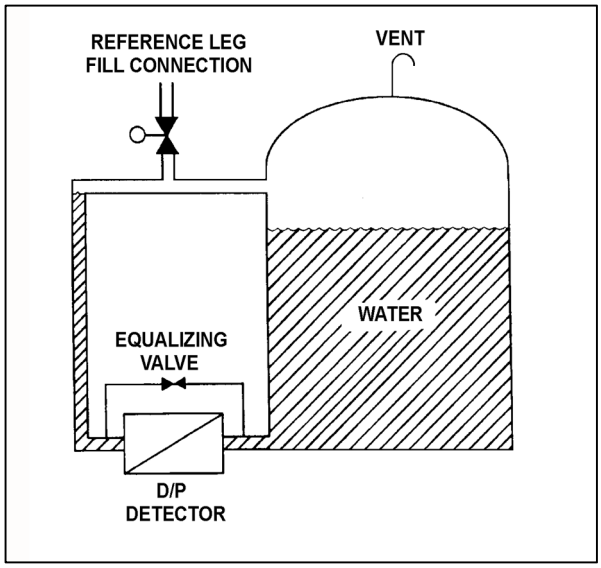

TOPIC: 191002
KNOWLEDGE: K1.07 [2.5/2.6]
QID: P6604 (B6606)

Refer to the drawing of a water storage tank with a differential pressure (D/P) level detection system (see figure below).

The water storage tank is 40 feet tall. The level detection system is calibrated to provide a level indication of 30 feet when the tank and reference leg levels are equal.

If the tank is completely filled with water, the tank level will indicate...

A. less than 30 feet.

B. 30 feet.

C. greater than 30 feet, but less than 40 feet.

D. 40 feet.

ANSWER: B.

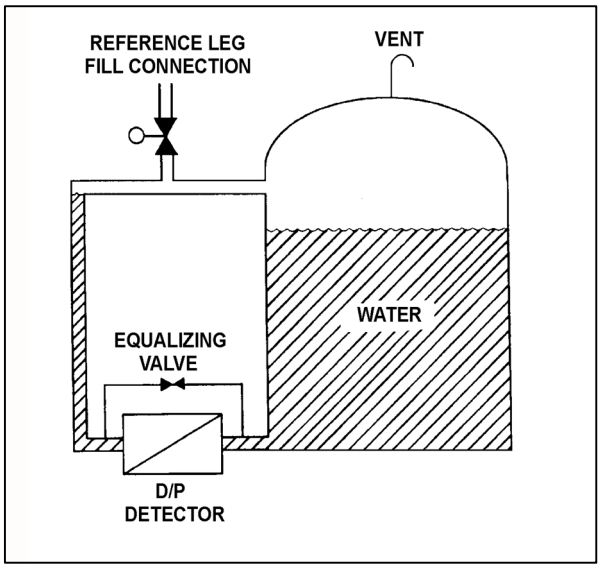

TOPIC: 191002
KNOWLEDGE: K1.07 [2.5/2.6]
QID: P6704 (B6705)

Refer to the drawing of a water storage tank with a differential pressure (D/P) level detection system (see figure below).

Assume that the initial temperature of the reference leg and the water in the tank is 100°F, and that reference leg temperature does not change.

If the temperature of the water in the tank increases by 20°F, the D/P sensed by the detector will _____ if the _____ of the water in the tank is constant.

A. decrease; level

B. decrease; mass

C. remain the same; level

D. remain the same; mass

ANSWER: D.

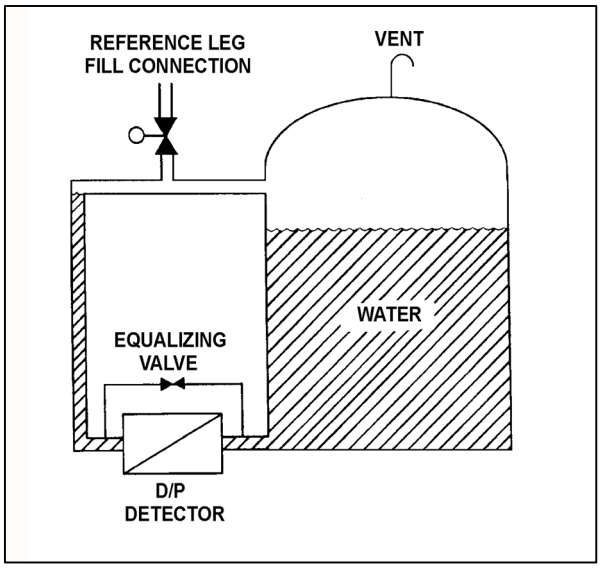

TOPIC: 191002
KNOWLEDGE: K1.07 [2.5/2.6]
QID: P7404 (B7404)

Refer to the drawing of a vented water storage tank with a differential pressure (D/P) level detection system (see figure below). The water in the tank and reference leg is at the same temperature.

The tank level indicator was just calibrated to indicate 0 percent when the tank is empty and 100 percent when the water level reaches the upper tap. The indicator's display range is 0 percent to 120 percent. The initial water level is as indicated in the figure.

If the tank water level slowly increases and stabilizes just below the top of the tank, the level indication will increase until…

A. the water level stabilizes, at which time the level indication will stabilize at 100 percent.

B. the water level stabilizes, at which time the level indication will stabilize at a value greater than 100 percent.

C. the water level reaches the upper tap, at which time the level indication will remain at 100 percent as the water level continues to increase.

D. the water level reaches the upper tap, at which time the level indication will continue to increase as the water level continues to increase.

ANSWER: C.

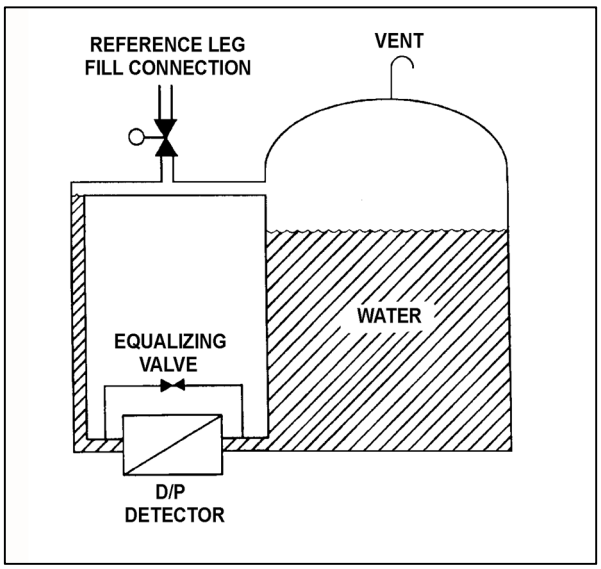

TOPIC: 191002
KNOWLEDGE: K1.07 [2.5/2.6]
QID: P7602 (B7602)

Refer to the drawing of a water storage tank with a differential pressure (D/P) level detection system (see figure below). The level detector has just been calibrated.

How will the indicated level be affected if condensation partially fills the normally dry reference leg?

A. Indicated level will <u>not</u> be affected.

B. Indicated level will be lower than actual level.

C. Indicated level will be higher than actual level.

D. Indicated level may be higher or lower than actual level depending on the pressure in the upper volume of the tank.

ANSWER: B.

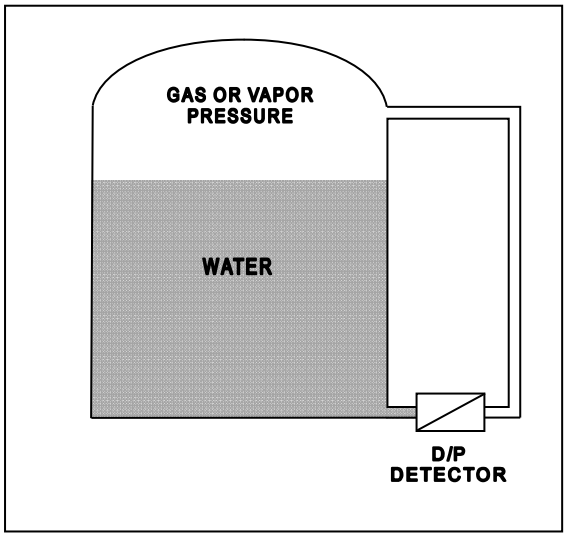

TOPIC: 191002
KNOWLEDGE: K1.08 [2.8/3.1]
QID: P11

Refer to the drawing of a water storage tank with a differential pressure (D/P) level detector (see figure below).

The level instrument has just been calibrated to read actual tank water level. If the reference leg subsequently experiences high ambient temperature, indicated level will...

A. equal the actual level.

B. read less than the actual level.

C. read greater than the actual level.

D. drift above and below the actual level.

ANSWER: C.

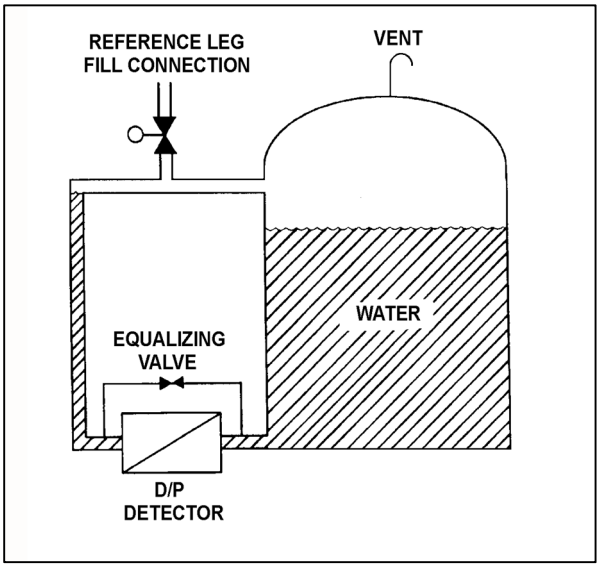

TOPIC: 191002
KNOWLEDGE: K1.08 [2.8/3.1]
QID: P14 (B510)

Refer to the drawing of a water storage tank with two differential pressure (D/P) level indicators (see figure below).

Indicator 1 was calibrated at 200°F and indicator 2 was calibrated at 100°F. If tank water temperature is 150°F, then...

A. indicator 1 will read greater than indicator 2.

B. indicator 2 will read greater than indicator 1.

C. indicators 1 and 2 will read the same.

D. both indicators will be inaccurate, but it is impossible to predict which indicator will read greater.

ANSWER: A.

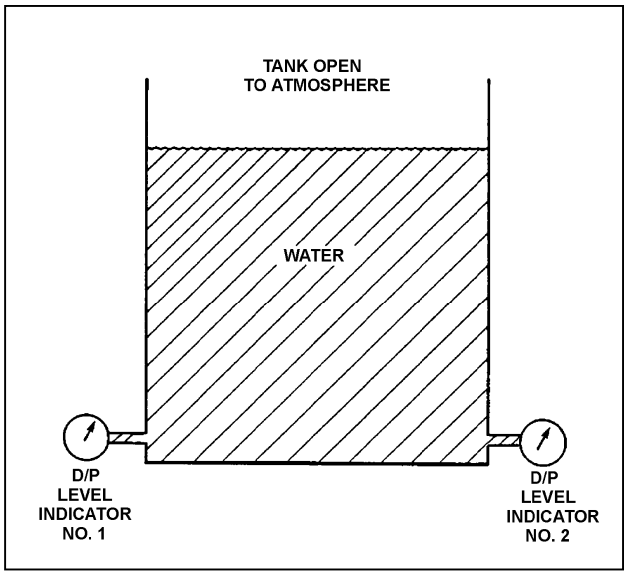

TOPIC: 191002
KNOWLEDGE: K1.08 [2.8/3.1]
QID: P609 (B12)

Refer to the drawing of two water storage tanks with four differential pressure (D/P) level detectors (see figure below).

The tanks are identical with equal water levels and both are pressurized to 20 psig. All detectors were calibrated at the current water temperature and 70°F external (ambient) temperature.

Which detectors will provide the <u>most</u> <u>accurate</u> level indication following an increase in external (ambient) temperature from 70°F to 100°F? (Assume tank contents temperatures and external pressure do <u>not</u> change.)

A. 1 and 3

B. 2 and 4

C. 1 and 4

D. 2 and 3

ANSWER: B.

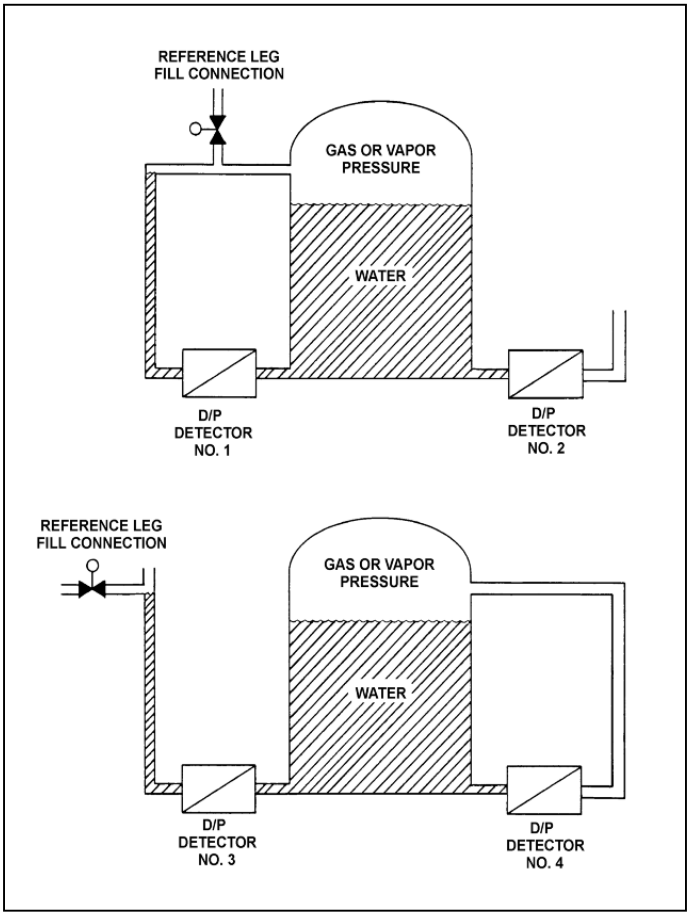

TOPIC: 191002
KNOWLEDGE: K1.08 [2.8/3.1]
QID: P1108 (B1609)

Refer to the drawing of a water storage tank with a differential pressure (D/P) level detection system (see figure below).

A calibrated D/P level detector is being used to measure level in a vented tank inside the auxiliary building. If building pressure increases with no change in temperature, the associated level indication will...

A. decrease, then increase and stabilize at the actual level.

B. decrease and stabilize below the actual level.

C. increase and stabilize above the actual level.

D. remain at the actual level.

ANSWER: D.

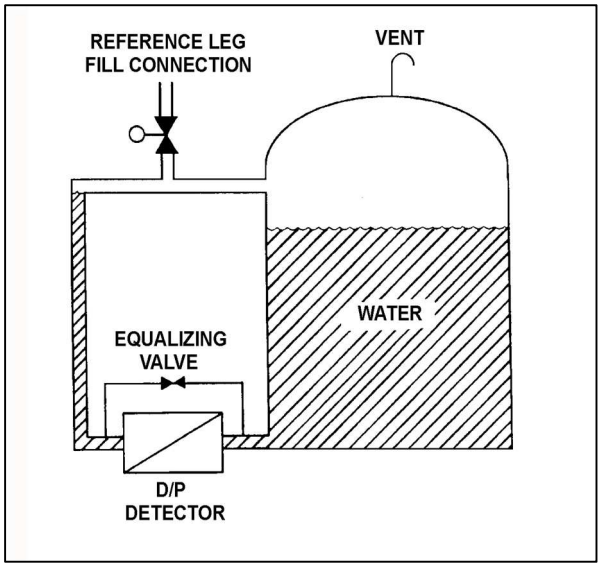

TOPIC: 191002
KNOWLEDGE: K1.08 [2.8/3.1]
QID: P1411

Refer to the drawing of a pressurizer differential pressure (D/P) level detection system (see figure below).

The pressurizer level instrument was calibrated while the plant was at normal operating conditions. With the plant in cold shutdown conditions, the pressurizer level D/P instrument will indicate _____ than actual level because the D/P sensed by the detector at cold shutdown conditions will be _____ than at normal operating conditions for the same level.

A. lower; greater

B. lower; smaller

C. higher; greater

D. higher; smaller

ANSWER: D.

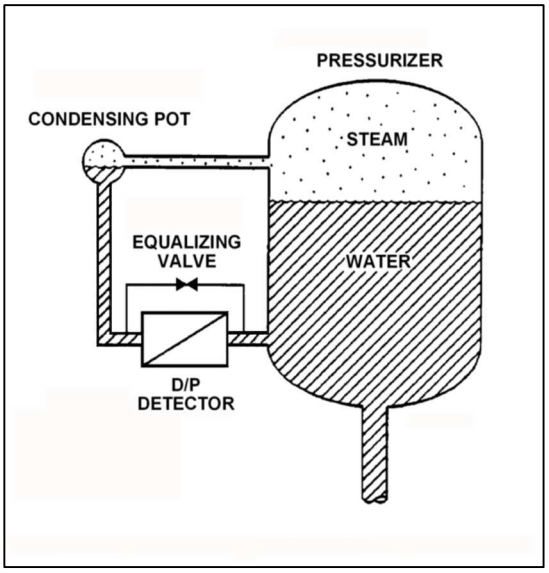

TOPIC: 191002
KNOWLEDGE: K1.08 [2.8/3.1]
QID: P1607 (B1409)

Refer to the drawing of a water storage tank with a differential pressure (D/P) level detector (see figure below).

The associated level instrument was calibrated with the water storage tank at 120°F. If the mass in the tank remains constant and the water temperature decreases to 100°F, the indicated level will...

A. remain the same although actual level decreases.

B. remain the same although actual level increases.

C. increase in direct proportion to the temperature decrease.

D. decrease in direct proportion to the temperature decrease.

ANSWER: A.

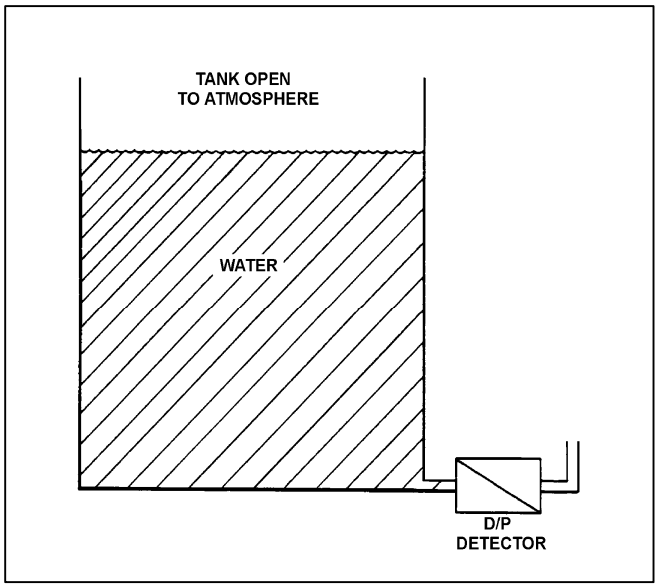

TOPIC: 191002
KNOWLEDGE: K1.08 [2.8/3.1]
QID: P2810 (B2808)

Refer to the drawing of a pressurizer level detection system (see figure below). The differential pressure (D/P) detector was calibrated while the plant was at normal operating conditions.

With the plant initially at normal operating conditions, a pressurizer steam space leak occurred. Pressurizer pressure decreased by 300 psia, and the ambient air temperature surrounding the reference leg increased by 80°F, where these parameters stabilized.

If the actual pressurizer water level is 60 percent, the reduced pressurizer pressure will tend to make the indicated pressurizer level read _____ than actual level; and the increased reference leg temperature will tend to make the indicated pressurizer level read _____ than actual level.

A. higher; higher

B. higher; lower

C. lower; higher

D. lower; lower

ANSWER: A.

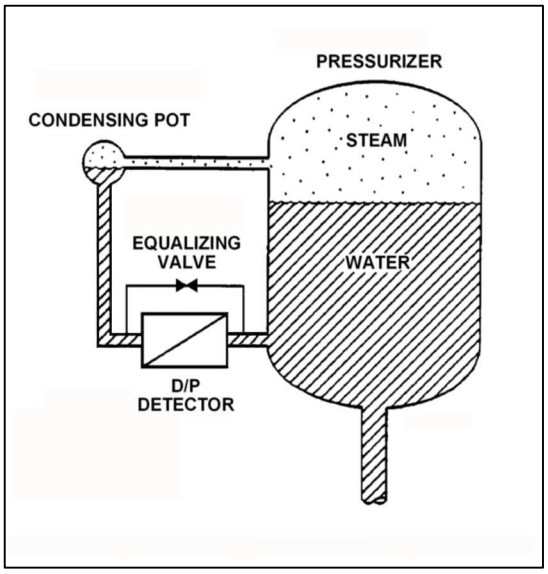

TOPIC: 191002
KNOWLEDGE: K1.08 [2.8/3.1]
QID: P4004 (B4006)

Refer to the drawing of a water storage tank with a differential pressure (D/P) level detection system (see figure below).

The level instrument has just been calibrated to indicate actual tank water level. Assume that tank water temperature and level remain constant. If the reference leg temperature increases by 20°F, indicated tank water level will...

A. be unpredictable.

B. equal the actual level.

C. be less than the actual level.

D. be greater than the actual level.

ANSWER: B.

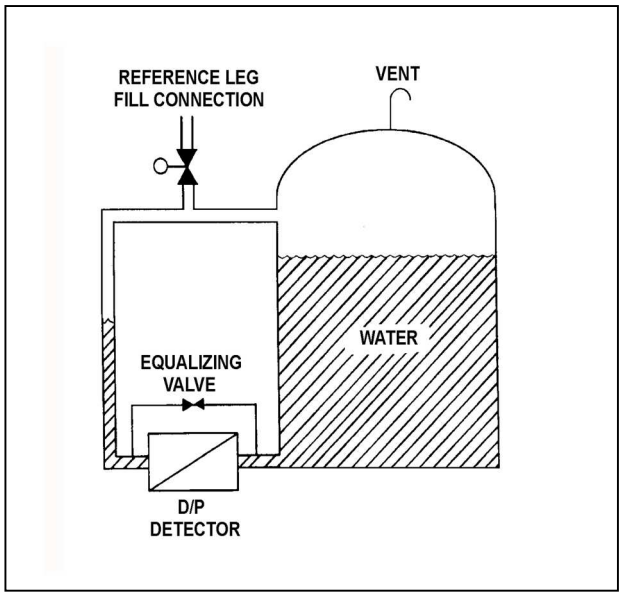

TOPIC: 191002
KNOWLEDGE: K1.09 [2.9/3.0]
QID: P12

The level indication for a wet reference leg differential pressure (D/P) level instrument will fail low as a result of...

A. a break on the reference leg.

B. a rupture of the diaphragm in the D/P cell.

C. the reference leg flashing to steam.

D. a break on the variable leg.

ANSWER: D.

TOPIC: 191002
KNOWLEDGE: K1.09 [2.9/3.0]
QID: P209 (B1010)

Refer to the drawing of a steam generator differential pressure (D/P) level detection system (see figure below).

The D/P detector was calibrated at the current conditions. Which one of the following will cause the level instrument to indicate lower than actual level? (Assume actual level remains the same.)

A. The variable leg ruptures.

B. The equalizing valve is opened.

C. The reference leg temperature increases.

D. The D/P detector diaphragm ruptures.

ANSWER: A.

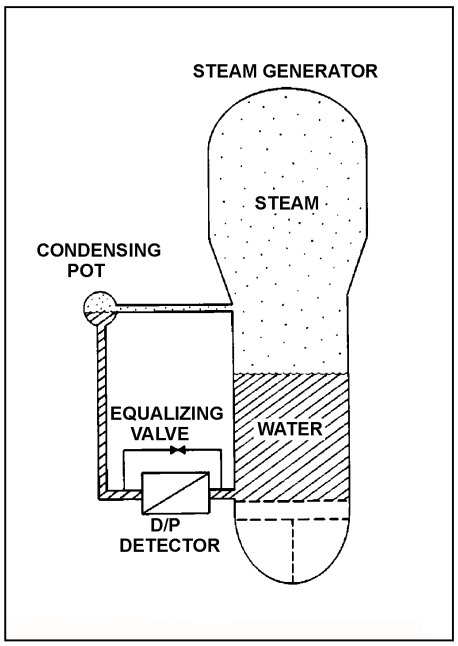

TOPIC: 191002
KNOWLEDGE: K1.09 [2.9/3.0]
QID: P309 (B308)

Refer to the drawing of a water storage tank with a differential pressure (D/P) level detection system (see figure below).

Tank water level indication will be lower than actual level when reference leg temperature is _____ than calibration conditions or when there is a break in the _____ leg of the D/P cell.

A. less; reference

B. less; variable

C. greater; reference

D. greater; variable

ANSWER: B.

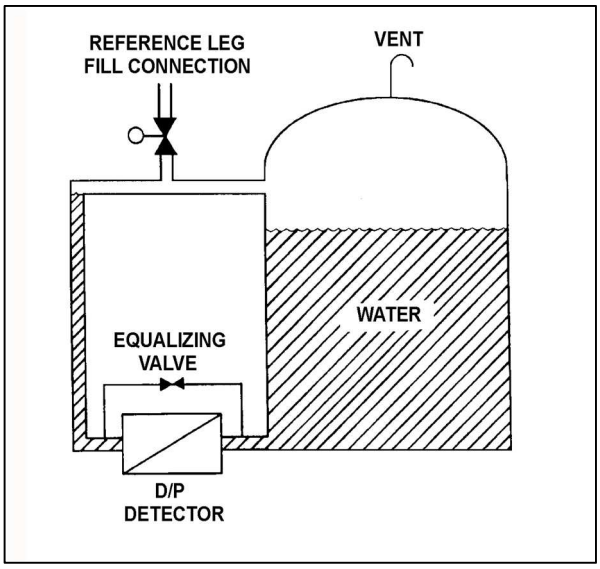

TOPIC: 191002
KNOWLEDGE: K1.09 [2.9/3.0]
QID: P911 (B3508)

Refer to the drawing of a steam generator (SG) differential pressure (D/P) level detection system (see figure below) that was recently calibrated at normal operating conditions.

With the reactor shut down, SG pressure was inadvertently decreased from 900 psig to 700 psig in 5 minutes due to operator error. SG pressure was stabilized at 700 psig, but during the pressure decrease a small amount of water in the condensing pot flashed to steam. Assume the reference leg water remained subcooled, except for the small amount of water that flashed to steam in the condensing pot.

As a result of the small loss of condensing pot water, SG level will indicate _____ than actual level; and as the condensing pot refills, indicated level will _____.

A. higher; decrease and stabilize above the actual level

B. higher; decrease and stabilize below the actual level

C. lower; increase and stabilize above the actual level

D. lower; increase and stabilize below the actual level

ANSWER: A.

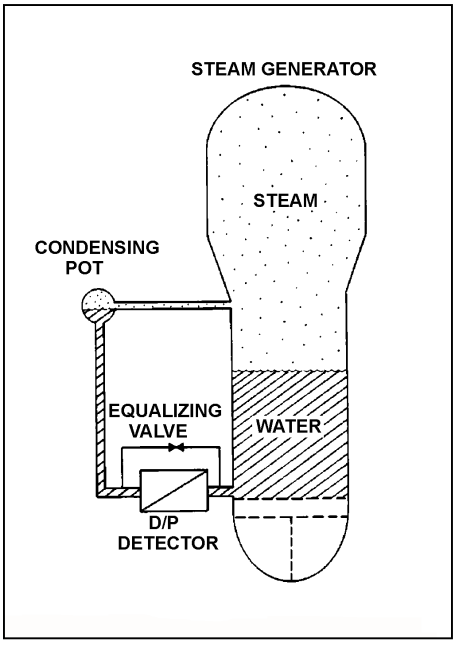

TOPIC: 191002
KNOWLEDGE: K1.09 [2.9/3.0]
QID: P2408 (B1212)

Refer to the drawing of a steam generator (SG) differential pressure (D/P) level detection system (see figure below).

Which one of the following events will result in a SG level indication that is greater than actual level?

A. The SG pressure increases by 50 psia.

B. The variable leg breaks and completely drains.

C. A portion of the reference leg water flashes to steam.

D. The temperature surrounding the SG and reference leg decreases by 30°F.

ANSWER: C.

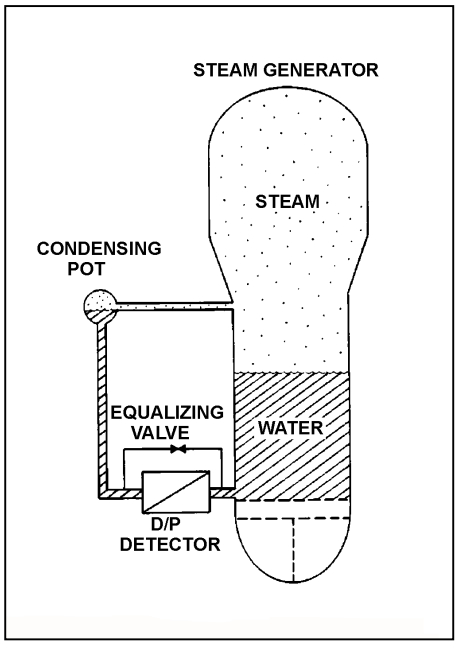

TOPIC: 191002
KNOWLEDGE: K1.09 [2.9/3.0]
QID: P2609

Refer to the drawing of a steam generator (SG) differential pressure (D/P) level detection system (see figure below).

The SG is at normal operating temperature and pressure with accurate level indication. Which one of the following events will result in a SG level indication that is greater than actual level?

A. The external pressure surrounding the D/P detector increases by 2 psi.

B. SG pressure increases by 50 psi with no change in actual water level.

C. Actual SG level increases by 6 inches.

D. The temperature of the reference leg increases by 20°F.

ANSWER: D.

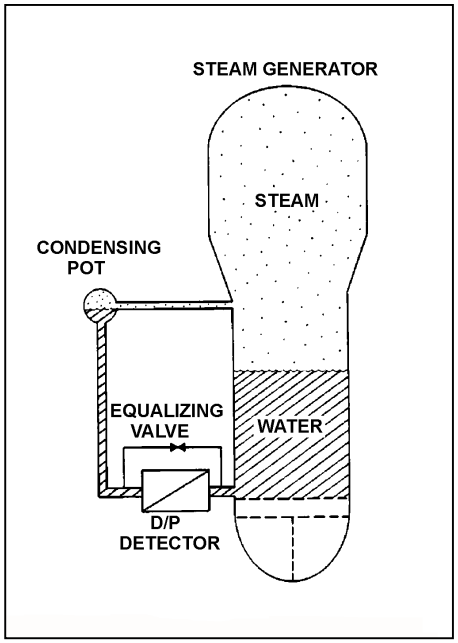

TOPIC: 191002
KNOWLEDGE: K1.09 [2.9/3.0]
QID: P2708

Refer to the drawing of a steam generator (SG) differential pressure (D/P) level detection system (see figure below).

The SG is supplying steam at normal operating temperature and pressure and the level instrumentation has just been calibrated. Which one of the following events will result in a SG level indication that is less than actual level?

A. SG pressure increases by 50 psi.

B. Actual SG water level decreases by 6 inches.

C. The external pressure surrounding the D/P detector decreases by 2 psi.

D. The temperature surrounding the reference leg increases by 20°F.

ANSWER: A.

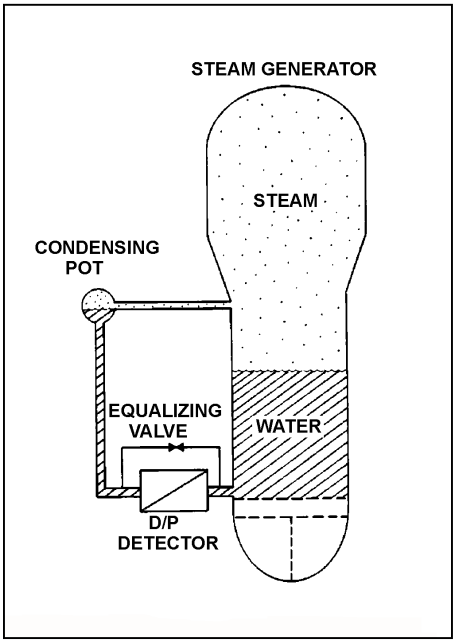

TOPIC: 191002
KNOWLEDGE: K1.09 [2.9/3.0]
QID: P2907

Refer to the drawing of a steam generator (SG) differential pressure (D/P) level detection system (see figure below).

The SG is at normal operating temperature and pressure with accurate level indication. Which one of the following events will result in a SG level indication that is lower than actual level?

A. Actual SG level decreases by 6 inches.

B. The temperature surrounding the reference leg decreases by 20°F.

C. The external pressure surrounding the D/P detector decreases by 2 psi.

D. SG pressure decreases by 50 psi with no change in actual water level.

ANSWER: B.

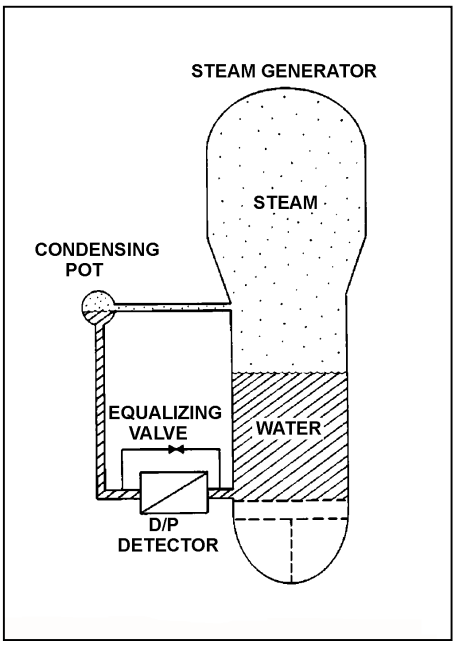

TOPIC: 191002
KNOWLEDGE: K1.09 [2.9/3.0]
QID: P3808

Refer to the drawing of a pressurizer differential pressure (D/P) level detection system (see figure below).

A reactor is shutdown with the reactor coolant system being maintained at 100 psia. The pressurizer level detector has just been calibrated. Suddenly a rupture in the condensing pot of the level detector results in a rapid drop of the condensing pot pressure to atmospheric pressure.

Given the following current conditions:

- The condensing pot is at atmospheric pressure.
- Pressurizer pressure is 98 psia and slowly decreasing.
- Bulk reference leg temperature is 120°F.
- Actual pressurizer level has <u>not</u> changed significantly.

Which one of the following describes the current pressurizer level indication from the detector?

A. Off scale low, because the bulk of the water in the reference leg has flashed to steam.

B. Off scale high, because the bulk of the water in the reference leg has flashed to steam.

C. Off scale low, because the static pressure on the reference leg is much less than the static pressure in the pressurizer.

D. Off scale high, because the static pressure on the reference leg is much less than the static pressure in the pressurizer.

ANSWER: D.

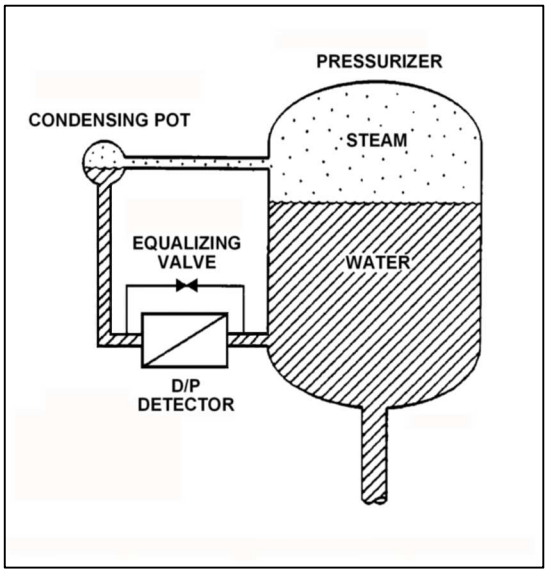

TOPIC: 191002
KNOWLEDGE: K1.10 [2.3/2.5]
QID: P310

Semiconductor strain gages are often used in transmitters for...

A. reactor coolant pressure instruments.

B. reactor coolant temperature instruments.

C. control rod position instruments.

D. steam generator level instruments.

ANSWER: A.

TOPIC: 191002
KNOWLEDGE: K1.10 [2.3/2.5]
QID: P413 (B410)

If the pressure sensed by a bourdon tube increases, the curvature of the detector will _____ because the greater force is being applied to the _____ curve of the detector.

A. increase; outer

B. increase; inner

C. decrease; outer

D. decrease; inner

ANSWER: C.

TOPIC: 191002
KNOWLEDGE: K1.10 [2.3/2.5]
QID: P810

In a diaphragm type pressure detector, pressure is measured using the _____ of the diaphragm.

A. rotational movement

B. axial deflection

C. change in circumference

D. change in diameter

ANSWER: B.

TOPIC: 191002
KNOWLEDGE: K1.10 [2.3/2.5]
QID: P1508 (B1011)

A bourdon tube works on the principle that when the pressure inside the tube decreases, the tube tends to: (Assume detected pressure remains above atmospheric pressure.)

A. coil, due to an increased pressure-induced force on the outside of the tube.

B. straighten, due to an increased pressure-induced force on the outside of the tube.

C. coil, due to the spring action of the metal overcoming the pressure-induced force on the inside of the tube.

D. straighten, due to the spring action of the metal overcoming the pressure-induced force on the inside of the tube.

ANSWER: C.

TOPIC: 191002
KNOWLEDGE: K1.10 [2.3/2.5]
QID: P2109 (B2109)

A centrifugal pump is taking suction from the bottom of a vented cylindrical storage tank that contains 100,000 gallons of water at 60°F. A pressure gauge at the inlet to the pump indicates 40 psig. Over the next several days, storage tank temperature increases to 90°F with no change in tank water level and no change in head loss in the pump suction line.

Which one of the following is the current pressure at the inlet to the pump?

A. 31.2 psig

B. 34.6 psig

C. 37.4 psig

D. 39.8 psig

ANSWER: D.

TOPIC: 191002
KNOWLEDGE: K1.11 [2.7/3.0]
QID: P210 (B210)

A simple bellows pressure detector is connected to a cooling water system. The detector is located in the reactor containment and has its low pressure side vented to the containment atmosphere. Current system pressure indication is 100 psig.

If a main steam line break raises containment pressure by 40 psig, the system pressure indication will: (Disregard any temperature effect on the pressure detector.)

A. increase by 40 psig.

B. increase by the square root of 40 psig.

C. decrease by 40 psig.

D. decrease by the square root of 40 psig.

ANSWER: C.

TOPIC: 191002
KNOWLEDGE: K1.11 [2.7/3.0]
QID: P509 (B1310)

A cooling water system bourdon tube pressure detector is located inside a sealed building and system pressure currently indicates 50 psig. A building ambient temperature increase of 20°F will cause a _____ change in indicated system pressure; a building pressure increase of 20 psig will cause a _____ change in indicated system pressure.

A. significant; significant

B. negligible; significant

C. significant; negligible

D. negligible; negligible

ANSWER: B.

TOPIC: 191002
KNOWLEDGE: K1.11 [2.7/3.0]
QID: P611

A bellows pressure transmitter with its low-pressure side vented to containment atmosphere is being used to measure reactor coolant system (RCS) pressure. A decrease in the associated pressure indication could be caused by either a containment pressure _____ or an RCS pressure _____.

A. decrease; decrease

B. increase; increase

C. decrease; increase

D. increase; decrease

ANSWER: D.

TOPIC: 191002
KNOWLEDGE: K1.11 [2.7/3.0]
QID: P710 (B711)

Cooling water system pressure is being monitored by a simple diaphragm pressure detector with its low pressure side vented to the containment. If a main steamline rupture raises containment pressure by 20 psi, cooling water system pressure indication will: (Disregard any temperature effect on the detector.)

A. increase by 20 psi.

B. decrease by 20 psi.

C. increase by the square root of 20 psi.

D. decrease by the square root of 20 psi.

ANSWER: B.

TOPIC: 191002
KNOWLEDGE: K1.11 [2.7/3.0]
QID: P3509 (B2912)

The pressure within a cooling water system is 100 psig, as indicated by a bourdon tube pressure detector. The cooling water system and the detector are located inside a reactor containment building. The pressure detector case is vented to the containment building, which is currently at atmospheric pressure.

If a steam line rupture raises the containment building pressure by 20 psi, the cooling water system pressure indication will... (Disregard any temperature effect on the detector.)

A. decrease to 80 psig.

B. decrease by a small, but indeterminate amount.

C. increase to 120 psig.

D. increase by a small, but indeterminate amount.

ANSWER: A.

TOPIC: 191002
KNOWLEDGE: K1.11 [2.7/3.0]
QID: P7503 (B7504)

A cooling water system pressure detector uses a bourdon tube as the sensing element. Which one of the following explains how the indicated system pressure will be affected if a local steam leak raises the temperature of the bourdon tube by 50°F? (Assume the cooling water system pressure does not change.)

A. Indicated pressure will decrease because the bourdon tube will become more flexible.

B. Indicated pressure will increase because the bourdon tube will become more flexible.

C. Indicated pressure will decrease because the bourdon tube internal pressure will increase.

D. Indicated pressure will increase because the bourdon tube internal pressure will increase.

ANSWER: B.

TOPIC: 191002
KNOWLEDGE: K1.11 [2.7/3.0]
QID: P7642 (B7642)

A cooling water system pressure detector uses a bourdon tube as the sensing element. Which one of the following explains how the indicated system pressure will be affected if the temperature of the bourdon tube decreases by 30°F? (Assume the cooling water system pressure does not change.)

A. Indicated pressure will decrease because the bourdon tube will become less flexible.

B. Indicated pressure will increase because the bourdon tube will become less flexible.

C. Indicated pressure will decrease because the bourdon tube internal pressure will decrease.

D. Indicated pressure will increase because the bourdon tube internal pressure will decrease.

ANSWER: A.

TOPIC: 191002
KNOWLEDGE: K1.12 [2.8/2.9]
QID: P211 (B212)

A bourdon-tube pressure detector was indicating 50 percent of scale when it was suddenly exposed to a high pressure transient that caused permanent strain to the bourdon tube. The detector remained intact and actual pressure was restored to its original value.

During the pressure transient, the affected pressure indication initially went off scale high. After the original pressure was restored, the indication was...

A. unpredictable.

B. less than 50 percent of scale.

C. 50 percent of scale.

D. greater than 50 percent of scale.

ANSWER: D.

TOPIC: 191002
KNOWLEDGE: K1.12 [2.8/2.9]
QID: P510 (B1610)

Refer to the drawing of a bellows-type differential pressure (D/P) detector (see figure below).

The spring in this detector (shown in a compressed state) has weakened from long-term use. If the actual D/P is constant, how will indicated D/P respond as the spring weakens?

A. Increase, because the spring will expand more

B. Decrease, because the spring will expand more

C. Increase, because the spring will compress more

D. Decrease, because the spring will compress more

ANSWER: C.

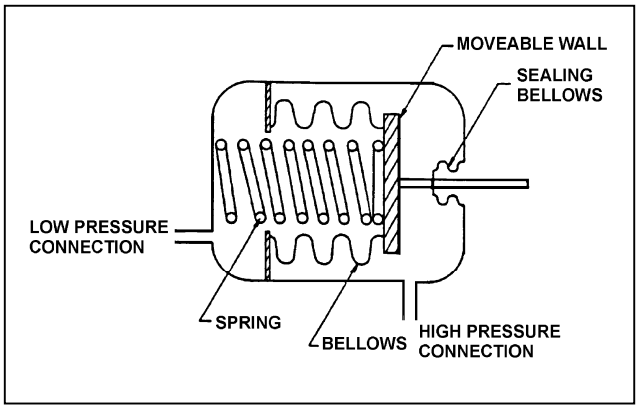

TOPIC: 191002
KNOWLEDGE: K1.12 [2.8/2.9]
QID: P511

If a bourdon tube pressure detector is over-ranged sufficiently to permanently distort the bourdon tube, subsequent pressure measurement will be inaccurate because the _____ of the detector tube will be inaccurate.

A. distance moved by the tip

B. change in the length

C. expansion of the cross-sectional area

D. change in the volume

ANSWER: A.

TOPIC: 191002
KNOWLEDGE: K1.12 [2.8/2.9]
QID: P1011 (B2910)

A properly calibrated 0 to 100 psia diaphragm pressure detector is connected to a pressurized system; the low pressure side of the detector is vented to the atmosphere. The detector is currently producing a system pressure indication of 75 psia.

If the detector diaphragm ruptures, indicated pressure will be approximately...

A. 0 psia.

B. 15 psia.

C. 60 psia.

D. 90 psia.

ANSWER: B.

TOPIC: 191002
KNOWLEDGE: K1.12 [2.8/2.9]
QID: P2211 (B1908)

Refer to the drawing of a bellows-type pressure detector (see figure below).

A bellows-type pressure detector with its low-pressure side vented to containment atmosphere is being used to measure reactor vessel pressure. A decrease in the associated pressure indication will be caused by either a containment pressure _____ or a _____.

A. increase; ruptured bellows

B. increase; broken spring

C. decrease; ruptured bellows

D. decrease; broken spring

ANSWER: A.

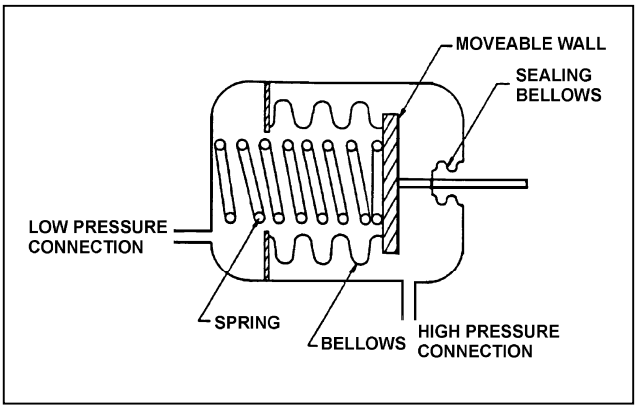

TOPIC: 191002
KNOWLEDGE: K1.13 [2.6/2.8]
QID: P13

A resistance temperature detector operates on the principle that the change in the electrical resistance of...

A. two dissimilar metals is directly proportional to the temperature change measured at their junction.

B. two dissimilar metals is inversely proportional to the temperature change measured at their junction.

C. a metal is directly proportional to its change in temperature.

D. a metal is inversely proportional to its change in temperature.

ANSWER: C.

TOPIC: 191002
KNOWLEDGE: K1.13 [2.6/2.8]
QID: P212

A resistance temperature detector operates on the principle that the change in the electrical resistance of a metal is _____ proportional to the change in _____.

A. inversely; metal temperature

B. inversely; metal temperature squared

C. directly; metal temperature

D. directly; metal temperature squared

ANSWER: C.

TOPIC: 191002
KNOWLEDGE: K1.13 [2.6/2.8]
QID: P311

In a comparison between a thermocouple and a resistance temperature detector, the thermocouple generally...

A. measures temperature less accurately.

B. is less affected by ambient temperature changes.

C. has a lower usable temperature range.

D. responds more slowly to a temperature change.

ANSWER: A.

TOPIC: 191002
KNOWLEDGE: K1.13 [2.6/2.8]
QID: P812

If the reference junction temperature of a thermocouple remains constant, the output voltage of the thermocouple is _____ proportional to the _____.

A. directly; measuring junction temperature

B. directly; square root of the measuring junction temperature

C. inversely; measuring junction temperature

D. inversely; square root of the measuring junction temperature

ANSWER: A.

TOPIC: 191002
KNOWLEDGE: K1.13 [2.6/2.8]
QID: P1209 (B1314)

Refer to the drawing of a simple thermocouple circuit (see figure below).

A thermocouple temperature indication is initially 350°F. A small steam leak raises reference (cold) junction temperature by 20°F, while the measuring junction temperature remains constant. Without temperature compensation for the reference junction, the new temperature indication will be...

A. 310°F.

B. 330°F.

C. 370°F.

D. 390°F.

ANSWER: B.

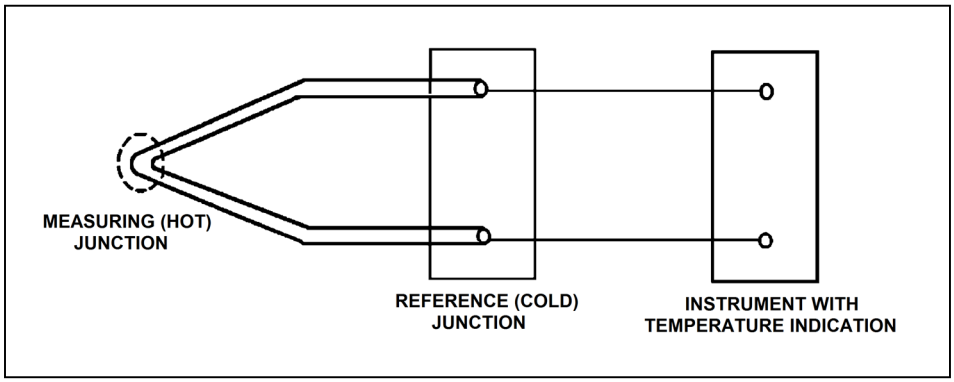

TOPIC: 191002
KNOWLEDGE: K1.13 [2.6/2.8]
QID: P1311

A thermocouple operates on the principle that a measurable voltage will be produced when two...

A. similar metals form two junctions at the same temperature.

B. similar metals form two junctions at different temperatures.

C. dissimilar metals form two junctions at the same temperature.

D. dissimilar metals form two junctions at different temperatures.

ANSWER: D.

TOPIC: 191002
KNOWLEDGE: K1.13 [2.6/2.8]
QID: P1412 (B2911)

Refer to the drawing of a simple thermocouple circuit (see figure below).

A thermocouple temperature indication is initially 390°F. A small steam leak raises reference (cold) junction temperature by 20°F, while the measuring junction temperature remains constant. Without temperature compensation for the reference junction, the new temperature indication will be...

A. 370°F.

B. 390°F.

C. 400°F.

D. 410°F.

ANSWER: A.

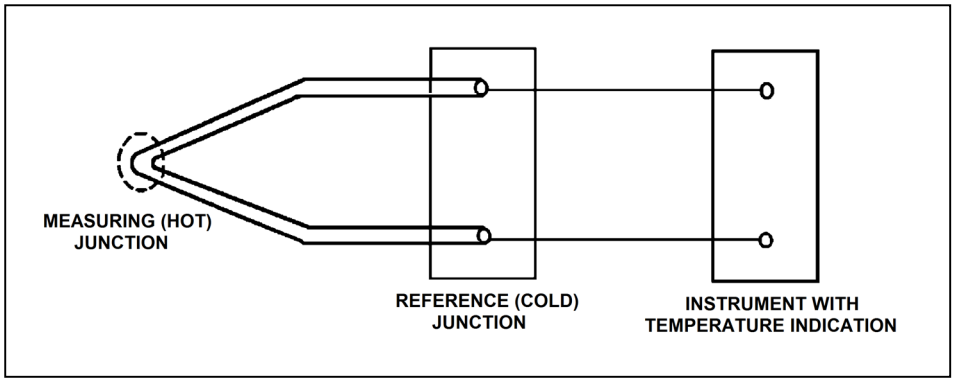

TOPIC: 191002
KNOWLEDGE: K1.13 [2.6/2.8]
QID: P1510 (B309)

In contrast to a thermocouple, a resistance temperature detector...

A. is used in high temperature applications.

B. does not require an external power supply for temperature indication.

C. uses a single type of metal or alloy in the sensing element.

D. is commonly placed in direct contact with the monitored substance.

ANSWER: C.

TOPIC: 191002
KNOWLEDGE: K1.13 [2.6/2.8]
QID: P1710 (B1710)

Refer to the drawing of a simple thermocouple circuit (see figure below).

A thermocouple temperature indication is initially 150°F. A small steam leak raises both the measuring (hot) junction and reference (cold) junction temperatures by 20°F. Without temperature compensation for the reference junction, the new temperature indication will be...

A. 130°F.

B. 150°F.

C. 170°F.

D. 190°F.

ANSWER: B.

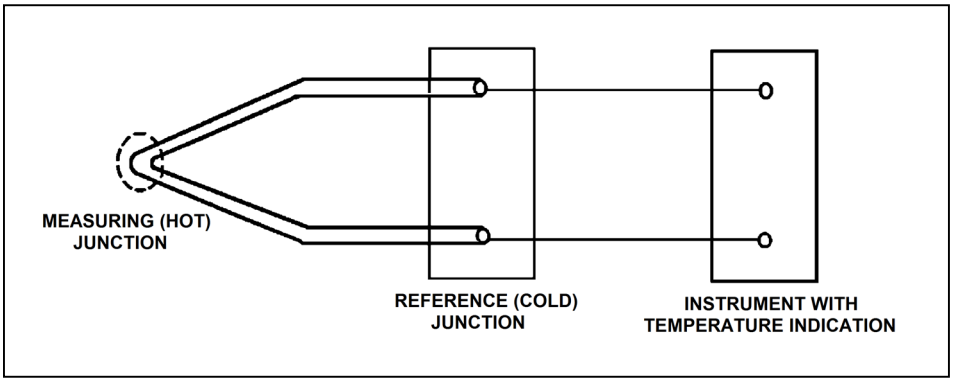

TOPIC: 191002
KNOWLEDGE: K1.13 [2.6/2.8]
QID: P2212 (B1510)

Refer to the drawing of a simple thermocouple circuit (see figure below).

Circuit temperature indication is initially 350°F. The reference (cold) junction temperature decreases by 10°F, while the measuring junction temperature remains constant. Without temperature compensation for the reference junction, the new temperature indication will be...

A. 340°F.

B. 350°F.

C. 360°F.

D. 370°F.

ANSWER: C.

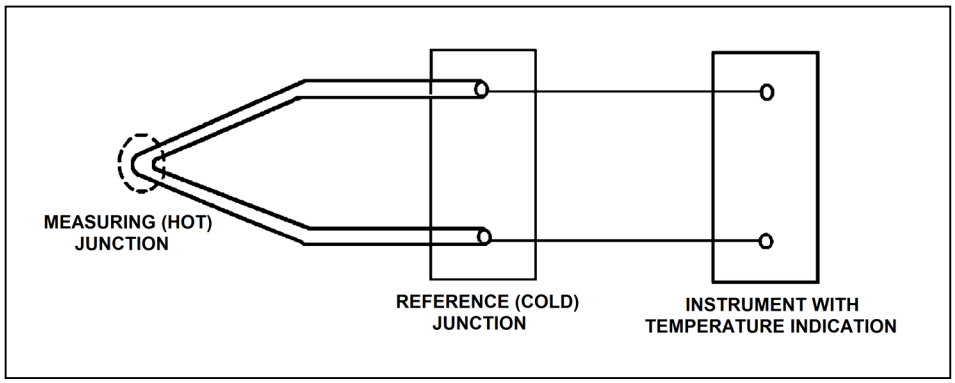

TOPIC: 191002
KNOWLEDGE: K1.13 [2.6/2.8]
QID: P2409 (B2412)

What is the purpose of the reference junction panel that is provided with many thermocouple circuits?

A. Ensures that thermocouple output is amplified sufficiently for use by temperature indication devices.

B. Ensures that temperature changes away from the thermocouple measuring junction do not affect thermocouple temperature indication.

C. Ensures that electrical noise in the thermocouple extension wires does not affect thermocouple temperature indication.

D. Ensures that different lengths of thermocouple extension wires do not affect thermocouple temperature indication.

ANSWER: B.

TOPIC: 191002
KNOWLEDGE: K1.13 [2.6/2.8]
QID: P2711 (B2712)

Unlike a resistance temperature detector, a typical thermocouple...

A. uses a single type of metal in the sensing element

B. requires a temperature-controlled reference junction.

C. can provide temperature input to a valve controller in a cooling water system.

D. requires an external power supply to provide indication of temperature.

ANSWER: B.

TOPIC: 191002
KNOWLEDGE: K1.13 [2.6/2.8]
QID: P3011 (B3013)

Refer to the drawing of a simple thermocouple circuit (see figure below).

A thermocouple temperature indication is initially 410°F with the reference (cold) junction at 125°F. An ambient temperature decrease lowers the reference junction temperature to 110°F, while the measuring junction temperature remains constant. Without temperature compensation for the reference junction, the new thermocouple temperature indication will be...

A. 380°F.

B. 395°F.

C. 410°F.

D. 425°F.

ANSWER: D.

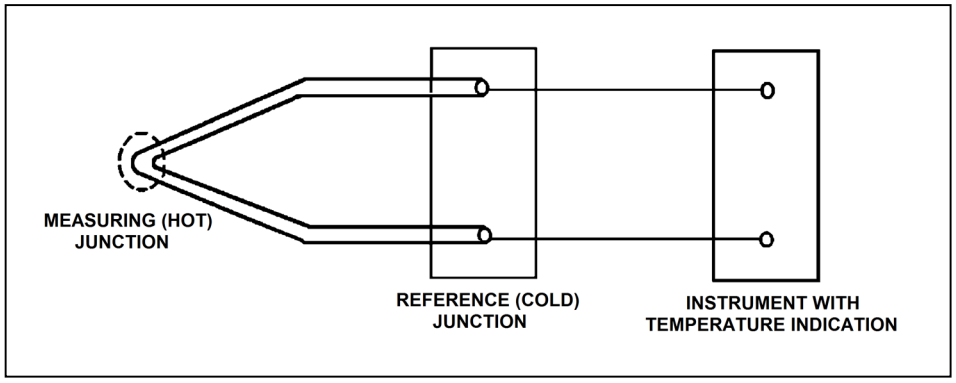

TOPIC: 191002
KNOWLEDGE: K1.13 [2.6/2.8]
QID: P4206 (B4206)

Refer to the drawing of a simple thermocouple circuit (see figure below).

Given that the temperatures at the measuring and reference junctions remain constant, if a ventilation system malfunction causes the temperature of the temperature indication panel to increase by 10°F, indicated temperature will...

A. not be affected.

B. increase by 10°F.

C. decrease by 10°F.

D. change in an unpredictable manner.

ANSWER: A.

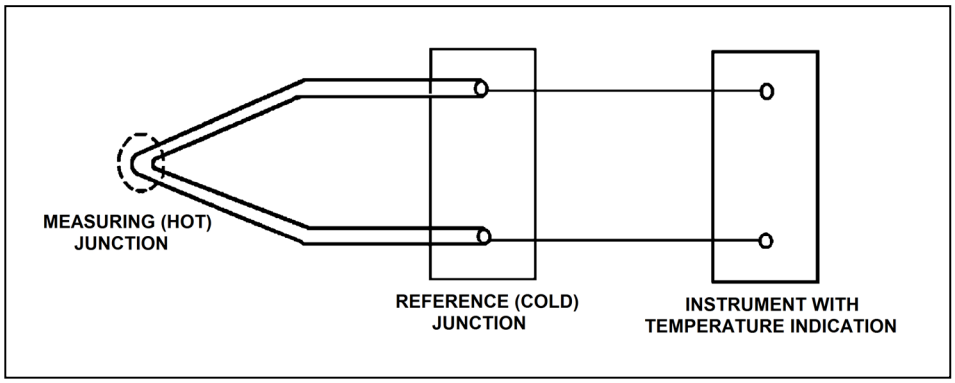

TOPIC: 191002
KNOWLEDGE: K1.13 [2.6/2.8]
QID: P5305 (B5305)

Refer to the drawing of a simple thermocouple circuit (see figure below).

The measuring and reference junctions are located inside the reactor containment building while the instrument is located in a remote location outside the containment building. Thermocouple temperature indication is initially 500°F.

An ambient temperature decrease outside the containment building lowers the temperature of the instrument by 10°F, while the measuring and reference junction temperatures remain constant. Thermocouple temperature indication at the lower ambient temperature will be...

A. 490°F.

B. 500°F.

C. 510°F.

D. unpredictable.

ANSWER: B.

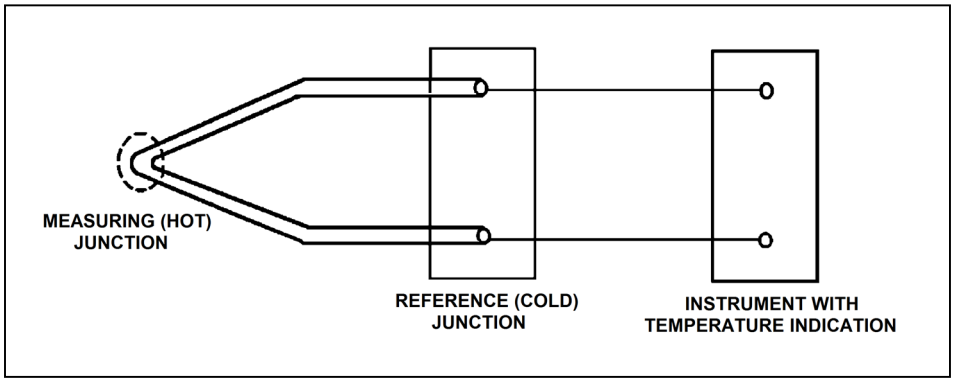

TOPIC: 191002
KNOWLEDGE: K1.13 [2.6/2.8]
QID: P5505 (B5507)

Refer to the drawing of a simple chromel-alumel thermocouple circuit (see figure below).

What is the effect on the thermocouple reference junctions if the chromel and alumel extension wires from the thermocouple connection head to the reference junction panel are replaced with copper wires?

A. There will no longer be any reference junctions.

B. The reference junctions will be located in the temperature instrument.

C. The reference junctions will still be located in the reference junction panel.

D. The reference junctions will be located in the thermocouple connection head.

ANSWER: D.

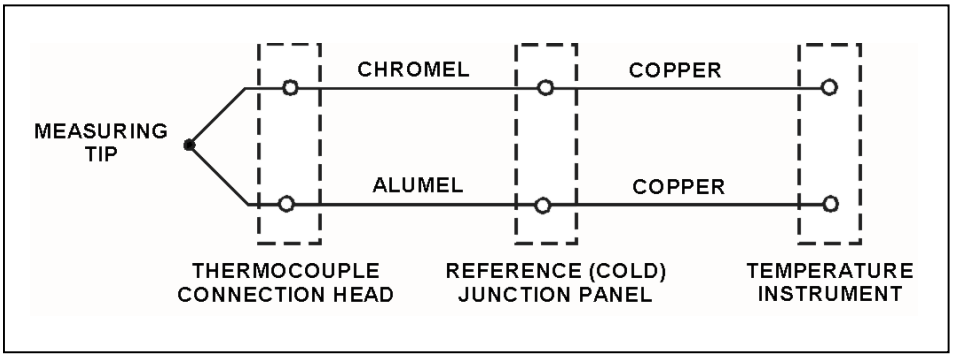

TOPIC: 191002
KNOWLEDGE: K1.13 [2.6/2.8]
QID: P5805 (B5805)

Which one of the following is a characteristic of a resistance temperature detector but not a thermocouple?

A. Sensing element is made from a single metal or alloy.

B. Requires a reference junction for accurate temperature measurement.

C. Extension leads made from relatively expensive metals or alloys are required for accurate temperature measurement.

D. Temperature measurement relies on a sensor material property that varies directly with the change in the measured temperature.

ANSWER: A.

TOPIC: 191002
KNOWLEDGE: K1.13 [2.6/2.8]
QID: P6004 (B6005)

Refer to the drawing of a simple chromel-alumel thermocouple circuit (see figure below).

What is the effect on the thermocouple reference junctions if the copper extension wires from the reference junction panel to the temperature instrument are replaced with alumel (top) and chromel (bottom) extension wires?

A. The reference junctions will be located in the thermocouple connection head.

B. The reference junctions will still be located in the reference junction panel.

C. The reference junctions will be located in the temperature instrument.

D. There will no longer be any reference junctions.

ANSWER: C.

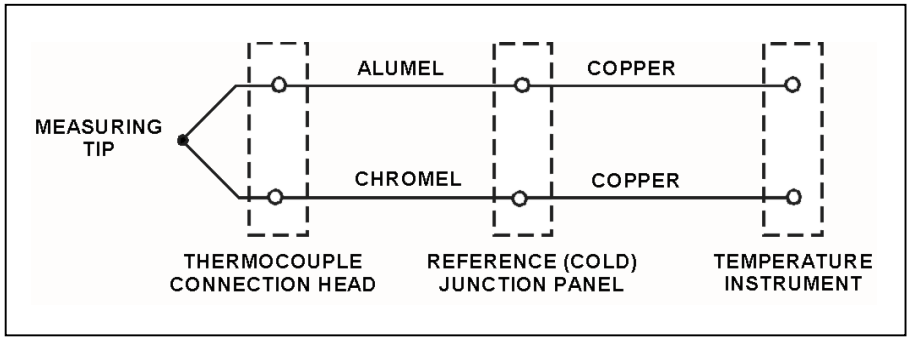

TOPIC: 191002
KNOWLEDGE: K1.13 [2.6/2.8]
QID: P6305 (B6306)

Refer to the drawing of a simple chromel-alumel thermocouple circuit (see figure below).

The thermocouple, thermocouple connection head, and reference junction panel are located inside a reactor building (RB) while the temperature instrument is located outside the RB. Thermocouple temperature indication is initially 440°F.

A steam leak inside the RB increases the temperatures of the thermocouple connection head and reference junction panel by 40°F, while the temperature at the measuring tip is unchanged. What is the resulting temperature indication?

A. 400°F

B. 440°F

C. 480°F

D. 520°F

ANSWER: A.

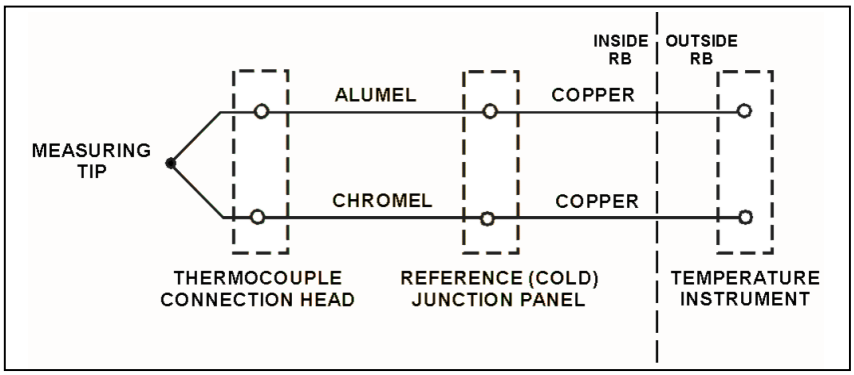

TOPIC: 191002
KNOWLEDGE: K1.13 [2.6/2.8]
QID: P6905 (B6905)

A simple two-wire resistance temperature detector (RTD) is being used to measure the temperature of a water system. Copper extension wires run from the RTD to a temperature instrument 40 feet away. If the temperature of the extension wires decreases, the electrical resistance of the extension wires will _____; and the temperature indication will _____ unless temperature compensation is provided.

A. increase; increase

B. increase; decrease

C. decrease; increase

D. decrease; decrease

ANSWER: D.

TOPIC: 191002
KNOWLEDGE: K1.13 [2.6/2.8]
QID: P7405 (B7405)

Refer to the drawing of a simple thermocouple circuit (see figure below).

The measuring junction temperature is currently 300°F while the reference junction temperature is being held constant at 120°F. The thermocouple circuit is capable of indicating 32°F to 600°F and has just been calibrated at the current conditions.

If the measuring junction temperature decreases and stabilizes at 90°F, what temperature will be indicated?

A. 32°F

B. 60°F

C. 90°F

D. 120°F

ANSWER: C.

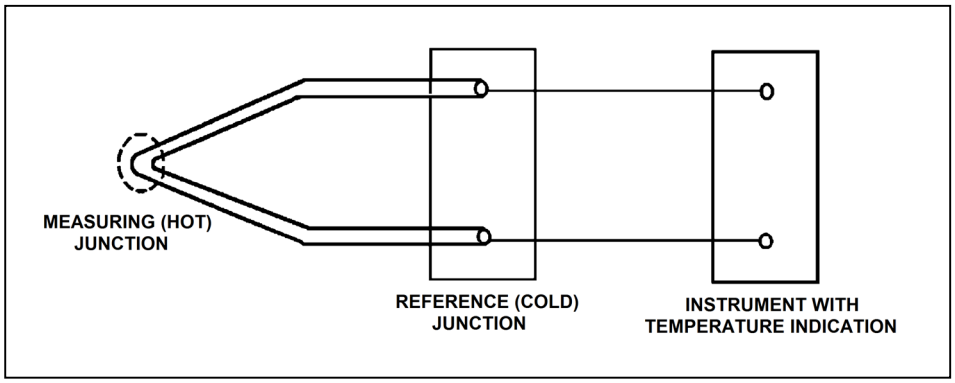

TOPIC: 191002
KNOWLEDGE: K1.13 [2.6/2.8]
QID: P7612 (B7612)

For proper operation of a thermocouple circuit, the reference junction temperature…

A. must be less than the measuring junction temperature.

B. must be greater than the measuring junction temperature.

C. may be less than, greater than, or equal to the measuring junction temperature.

D. may be less than or greater than, but not equal to, the measuring junction temperature.

ANSWER: C.

TOPIC: 191002
KNOWLEDGE: K1.14 [2.8/2.9]
QID: P213

An open circuit in a thermocouple detector causes the affected temperature indication to fail...

A. high.

B. low.

C. to reference junction temperature.

D. as is.

ANSWER: C.

TOPIC: 191002
KNOWLEDGE: K1.14 [2.8/2.9]
QID: P312 (B310)

If shorting occurs within a resistance temperature detector, the associated indication will fail...

A. low.

B. high.

C. as is.

D. to midscale.

ANSWER: A.

TOPIC: 191002
KNOWLEDGE: K1.14 [2.8/2.9]
QID: P414 (B208)

A resistance temperature detector (RTD) is used in a balanced bridge circuit to indicate temperature. If the RTD develops an open circuit (bridge circuit remains intact), temperature indication will fail...

A. high.

B. low.

C. as is.

D. to midscale.

ANSWER: A.

TOPIC: 191002
KNOWLEDGE: K1.14 [2.8/2.9]
QID: P2011 (B2009)

Refer to the drawing of a simple thermocouple circuit (see figure below) that is calibrated for a reference junction temperature of 90°F.

Thermocouple temperature indication is currently 150°F. Indicator range is from 0°F to 2000°F.

If one of the thermocouple extension wires loosens and becomes dislodged from its terminal in the reference junction panel, which one of the following temperature indications will result?

A. 0°F

B. 60°F

C. 90°F

D. 2000°F

ANSWER: C.

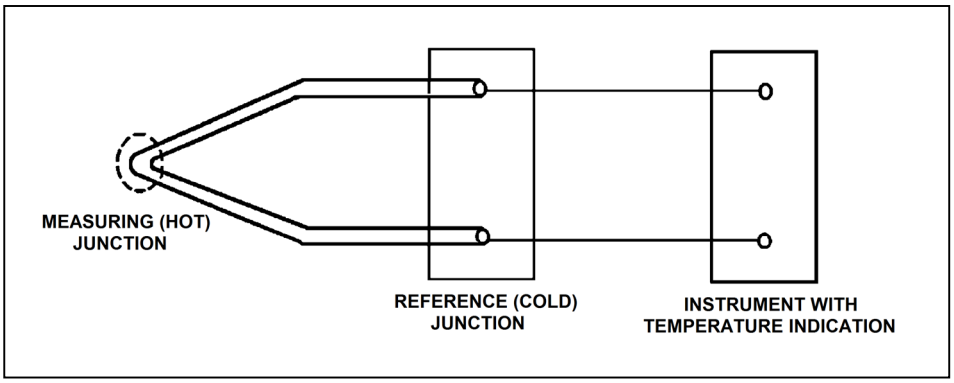

TOPIC: 191002
KNOWLEDGE: K1.14 [2.8/2.9]
QID: P6504 (B6506)

Because of a thermocouple temperature display failure, the millivolt output of a thermocouple circuit is being converted to a temperature value using conversion tables. The tables are based on a thermocouple reference junction temperature of 32°F. The actual reference junction is located in a panel that is maintained at 120°F. Room temperature surrounding the panel is 80°F.

What adjustment must be made to the temperature value taken from the conversion tables to calculate the actual temperature at the measuring tip of the thermocouple?

A. Add 48°F.

B. Subtract 48°F.

C. Add 88°F.

D. Subtract 88°F.

ANSWER: C.

TOPIC: 191002
KNOWLEDGE: K1.14 [2.8/2.9]
QID: P7103 (B7106)

A resistance temperature detector (RTD) and a thermocouple (TC) are commonly used sensors for temperature measurement. If a temperature display fails, which of the sensors, if any, has a property that can be measured manually and converted to a temperature value with the aid of conversion tables.

A. TC only.

B. RTD only.

C. Both TC and RTD.

D. Neither TC nor RTD.

ANSWER: C.

TOPIC: 191002
KNOWLEDGE: K1.14 [2.8/2.9]
QID: P7205 (B7206)

Because of a thermocouple temperature display failure, the millivolt output of a thermocouple circuit is being converted to a temperature value using conversion tables. The tables are based on a thermocouple reference junction temperature of 32°F. The actual reference junction is located in a panel that is currently at 80°F.

The temperature value taken from the conversion tables is 120°F.

What adjustment must be made to the temperature value taken from the conversion tables to calculate the actual temperature at the measuring tip of the thermocouple?

A. Add 48°F.

B. Subtract 48°F.

C. Add 88°F.

D. Subtract 88°F.

ANSWER: A.

TOPIC: 191002
KNOWLEDGE: K1.14 [2.8/2.9]
QID: P7652 (B7652)

Because of a thermocouple temperature display failure, the millivolt output of a thermocouple circuit is being converted to a temperature value using conversion tables. The tables are based on a thermocouple reference junction temperature of 32°F. The actual reference junction is located in a panel that is maintained at 96°F. Room temperature surrounding the panel is 72°F.

What adjustment must be made to the temperature value taken from the conversion tables to calculate the actual temperature at the measuring tip of the thermocouple?

A. Add 64°F.

B. Subtract 64°F.

C. Add 40°F.

D. Subtract 40°F.

ANSWER: A.

TOPIC: 191002
KNOWLEDGE: K1.16 [2.3/2.7]
QID: P813 (B812)

What type of sensor is most commonly used to provide remote position indication of a valve that is normally either fully open or fully closed?

A. Limit switch

B. Reed switch

C. Servo transmitter

D. Linear variable differential transformer

ANSWER: A.

TOPIC: 191002
KNOWLEDGE: K1.16 [2.3/2.7]
QID: P1313 (B1712)

Which one of the following devices is commonly used to provide remote indication of valve position on an analog meter in units of "percent of full open"?

A. Limit switch

B. Reed switch

C. Linear variable differential transformer

D. Resistance temperature detector

ANSWER: C.

TOPIC: 191002
KNOWLEDGE: K1.16 [2.3/2.7]
QID: P2611

Refer to the simplified drawing of a control rod position detector (see figure below).

Coils of wire connected to an AC power supply are being used to monitor the position of a control rod in a reactor. The coils are mounted in a column outside the reactor vessel head such that the steel control rod drive shaft passes upward through the coils as the control rod is withdrawn. Currently, the top of a control rod drive shaft is located between coils A and B as shown. The control rod is to be withdrawn until the top of the control rod drive shaft is located just below coil C.

Compared to the initial coil output currents, after the control rod is withdrawn the output current of coil A will be _____; and the output current of coil B will be _____.

A. higher; higher

B. higher; lower

C. the same; higher

D. the same; lower

ANSWER: D.

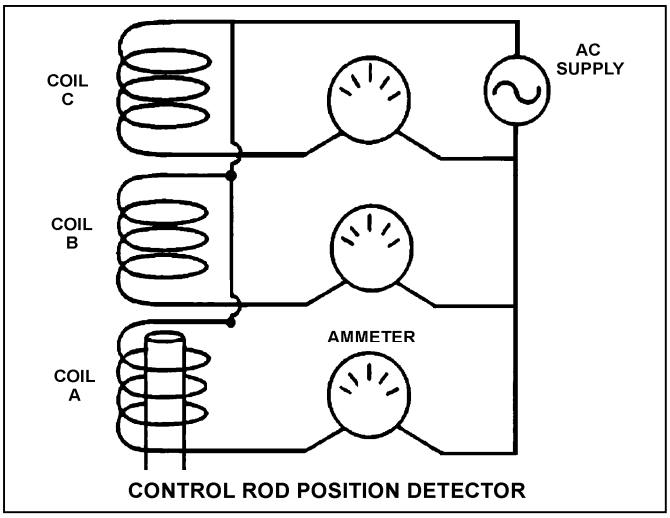

TOPIC: 191002
KNOWLEDGE: K1.16 [2.3/2.7]
QID: P2813 (B2811)

Refer to the simplified drawing of a control rod position detector circuit (see figure below).

A magnet on the control rod extension (or drive) shaft sequentially closes individual reed switches mounted vertically adjacent to the control rod drive housing. A constant +5 DC volts is supplied to the input of the resistor network at resistor R_1.

A control rod is initially fully inserted such that all reed switch contacts are open; then the rod is withdrawn until reed switch contact S_1 is closed. Compared to the initial circuit currents, the current through resistor R_5 after the rod withdrawal will be _____; and the output current of the resistor network to the amplifier will be _____.

A. lower; higher

B. lower; lower

C. higher; higher

D. higher; lower

ANSWER: A.

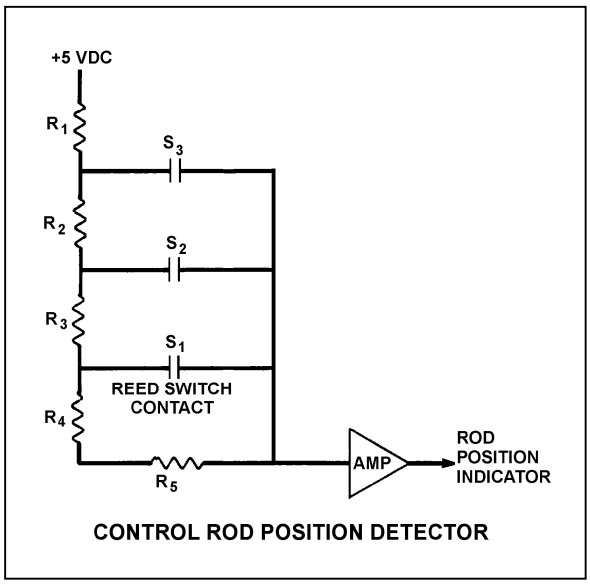

TOPIC: 191002
KNOWLEDGE: K1.16 [2.3/2.7]
QID: P2911

Reed switches are being used in an electrical measuring circuit to monitor the position of a control rod in a reactor. The reed switches are mounted in a column above the reactor vessel such that the control rod drive shaft passes by the reed switches as the control rod is withdrawn.

Which one of the following describes the action that causes the electrical output of the measuring circuit to change as the control rod is withdrawn?

A. An AC coil on the control rod drive shaft induces a voltage into each reed switch as the drive shaft passes by.

B. A metal tab on the control rod drive shaft mechanically closes each reed switch as the drive shaft passes by.

C. The primary and secondary coils of each reed switch attain maximum magnetic coupling as the drive shaft passes by.

D. A permanent magnet on the control rod drive shaft attracts the movable contact arm of each reed switch as the drive shaft passes by.

ANSWER: D.

TOPIC: 191002
KNOWLEDGE: K1.17 [3.3/3.5]
QID: P1612

A reactor is shut down at 100 cps in the source range when a loss of coolant accident occurs. Assuming the source neutron production rate remains constant, how and why will excore source range detector outputs change as homogeneous core voiding increases from 20 percent to 40 percent?

A. Increases, because more neutron leakage is occurring.

B. Decreases, because less neutron leakage is occurring.

C. Increases, because K_{eff} is increasing.

D. Decreases, because K_{eff} is decreasing.

ANSWER: A.

TOPIC: 191002
KNOWLEDGE: K1.17 [3.3/3.5]
QID: P3112

Given the following conditions:

- The reactor is shut down.
- The reactor coolant system is at normal operating pressure and temperature.
- The BF_3 source range detectors are properly positioned outside the reactor vessel and adjacent to the lower portion of the core.
- All BF_3 source range detectors are indicating approximately 100 cps.
- A sudden loss of coolant accident occurs that causes bulk boiling and homogeneous core voiding in the reactor vessel.

Assuming that the source neutron flux level remains constant, how and why will source range detector outputs change as homogeneous core voiding increases from 0 percent to 50 percent?

A. Increase, because the detectors will experience a higher rate of neutron interactions due to the axial power distribution shifting toward the lower portion of the core.

B. Increase, because the detectors will experience a higher rate of neutron interactions due to increasing neutron leakage from the core.

C. Decrease, because the detectors will experience a lower rate of neutron interactions due to a decreasing subcritical multiplication neutron level.

D. Decrease, because the detectors will experience a lower rate of gamma interactions due to decreasing reactor coolant attenuation.

ANSWER: B.

TOPIC: 191002
KNOWLEDGE: K1.18 [2.6/2.8]
QID: P15 (B314)

Scintillation detectors convert radiation energy into light by a process known as...

A. gas amplification.

B. space charge effect.

C. luminescence.

D. photoionization.

ANSWER: C.

TOPIC: 191002
KNOWLEDGE: K1.18 [2.6/2.8]
QID: P16

A BF_3 proportional counter is being used to measure neutron level during a reactor startup. Which one of the following describes the method used to ensure that neutron indication is <u>not</u> affected by gamma reactions in the detector?

A. Two counters are used: one sensitive to neutron and gamma and the other sensitive to gamma only. The outputs are electrically opposed to cancel the gamma-induced currents.

B. The BF_3 proportional counter measures neutron flux of such high intensity that the gamma signal is insignificant compared to the neutron signal.

C. In a proportional counter, gamma-induced pulses are of insufficient duration to generate a significant output. Only neutron pulses have sufficient duration to be counted by the detector instrumentation.

D. In a proportional counter, neutron-induced pulses are significantly larger than gamma pulses. The detector instrumentation filters out the smaller gamma pulses.

ANSWER: D.

TOPIC: 191002
KNOWLEDGE: K1.18 [2.6/2.8]
QID: P214 (B213)

Most of the electrons collected in a fission chamber are released as a result of ionizations caused directly by...

A. fission fragments.

B. fission gammas.

C. fission betas.

D. fissionable materials.

ANSWER: A.

TOPIC: 191002
KNOWLEDGE: K1.18 [2.6/2.8]
QID: P215

Which one of the following describes the reason for the high sensitivity of a Geiger-Mueller tube radiation detector?

A. Changes in applied detector voltage have little effect on detector output.

B. Geiger-Mueller tubes are thinner than other radiation detector types.

C. Any incident radiation event causing primary ionization results in ionization of the entire detector gas volume.

D. Geiger-Mueller tubes are operated at relatively low detector voltages, allowing detection of low energy radiation.

ANSWER: C.

TOPIC: 191002
KNOWLEDGE: K1.18 [2.6/2.8]
QID: P314

A gas-filled radiation detector operating in the ion chamber region is exposed to a gamma radiation field. If the gamma radiation field remains constant while the detector applied voltage is increased but kept within the ion chamber region, the detector output will…

A. increase, because of an increase in secondary ionizations.

B. remain the same, because detector output is <u>not</u> affected by a change in voltage in this region.

C. increase, because of a decrease in the recombination of primary ions.

D. remain the same, because the detector is already producing its maximum output.

ANSWER: B.

TOPIC: 191002
KNOWLEDGE: K1.18 [2.6/2.8]
QID: P316

Which one of the following materials is typically installed inside an ion chamber detector that is used for reactor power indication?

A. Polyethylene

B. Boron-10

C. Uranium-238

D. Rhodium-103

ANSWER: B.

TOPIC: 191002
KNOWLEDGE: K1.18 [2.6/2.8]
QID: P614

In a gas-filled radiation detector operating in the proportional region, essentially _____ of the ions caused by incident radiation are collected; and the number of ions collected from secondary ionizations is _____ the applied voltage.

A. all; independent of

B. none; related to

C. all; related to

D. none; independent of

ANSWER: C.

TOPIC: 191002
KNOWLEDGE: K1.18 [2.6/2.8]
QID: P1013

Which one of the following features is typically used to enhance thermal neutron detection in a gas-filled detector?

A. Encapsulate the detector in polyethylene.

B. Encapsulate the detector in boron-10.

C. Line the inside of the detector with polyethylene.

D. Line the inside of the detector with boron-10.

ANSWER: D.

TOPIC: 191002
KNOWLEDGE: K1.18 [2.6/2.8]
QID: P1112

Which one of the following is a characteristic of Geiger-Mueller tube radiation detectors?

A. They can discriminate between neutron and gamma radiation.

B. They can discriminate between gammas of differing energies in the MeV range.

C. They provide an output that is inversely proportional to the applied voltage within the Geiger-Mueller region.

D. They undergo maximum gas amplification whenever an ion is formed in the tube.

ANSWER: D.

TOPIC: 191002
KNOWLEDGE: K1.18 [2.6/2.8]
QID: P1213

Which one of the following describes why a BF_3 proportional counter can be used in the source range to measure neutron radiation in a radiation field that also contains gamma radiation?

A. Neutrons directly ionize the BF_3 gas, producing larger pulses than gammas.

B. Neutrons interacting with the BF_3 gas result in the release of alpha particles which produce larger pulses than gammas.

C. Neutrons are captured by boron-10 and produce additional neutrons that completely ionize the fill gas in the detector.

D. The gamma radiation field is insignificant when compared to the neutron field.

ANSWER: B.

TOPIC: 191002
KNOWLEDGE: K1.18 [2.6/2.8]
QID: P1314

Which one of the following types of radiation will produce the greatest number of ions while passing through one centimeter of air? (Assume the same initial kinetic energy for each type of radiation.)

A. Alpha

B. Beta

C. Gamma

D. Neutron

ANSWER: A.

TOPIC: 191002
KNOWLEDGE: K1.18 [2.6/2.8]
QID: P1513 (B1514)

Which one of the following lists the two types of gas-filled radiation detectors whose outputs will be <u>least</u> affected by a small variation (±10 volts) in the voltage applied to the detectors? (Assume the applied voltage remains within normal range.)

A. Limited proportional and Geiger-Mueller

B. Ion chamber and proportional

C. Proportional and limited proportional

D. Geiger-Mueller and ion chamber

ANSWER: D.

TOPIC: 191002
KNOWLEDGE: K1.18 [2.6/2.8]
QID: P1613 (B913)

Which one of the following describes a characteristic of a Geiger-Mueller radiation detector?

A. Radiation types can be identified by pulse height and duration.

B. Specific radionuclides can be identified with the use of gamma spectrometry.

C. Small variations in applied voltage will result in large changes in detector output.

D. Any type of radiation that ionizes the detector gas will produce the same magnitude detector output pulse.

ANSWER: D.

TOPIC: 191002
KNOWLEDGE: K1.18 [2.6/2.8]
QID: P1713 (B1714)

A Geiger-Mueller radiation detector is located in a radiation field consisting of beta, gamma, and fast neutron radiation. Assuming each type of radiation enters the detector gas chamber and ionizes the detector gas, which one of the following describes the resulting detector pulse sizes?

A. Beta radiation will produce a larger pulse size than either gamma or fast neutron radiation.

B. Gamma radiation will produce a larger pulse size than either beta or fast neutron radiation.

C. Fast neutron radiation will produce a larger pulse size than either beta or gamma radiation.

D. Beta, gamma, and fast neutron radiation will produce pulse sizes that are equal in magnitude.

ANSWER: D.

TOPIC: 191002
KNOWLEDGE: K1.18 [2.6/2.8]
QID: P1812 (B814)

A gas-filled radiation detector operating in the proportional region is exposed to a constant gamma radiation field. If the applied voltage is increased but maintained within the proportional region, the rate of ion collection will...

A. increase, because more secondary ionizations are occurring in the detector.

B. increase, because fewer primary ions are recombining in the detector prior to reaching the electrodes.

C. stay approximately the same, because the ion chamber is operating at saturated conditions.

D. stay approximately the same, because all of the primary ions were already being collected at the lower voltage.

ANSWER: A.

TOPIC: 191002
KNOWLEDGE: K1.18 [2.6/2.8]
QID: P1909 (B1113)

What is the function of the positive electrode in an ion chamber?

A. Produce ions when exposed to a radiation field.

B. Release electrons to combine with positive ions.

C. Perform gas quenching to maximize detector sensitivity.

D. Collect the electrons released during gas ionization.

ANSWER: D.

TOPIC: 191002
KNOWLEDGE: K1.18 [2.6/2.8]
QID: P1910

Just prior to a plant outage, the power range nuclear instruments (using excore detectors) were calibrated at 50 percent reactor power. During the outage, 25 percent of the fuel assemblies were shuffled to reduce the power being produced at the center of the core. No fuel assemblies were replaced.

Immediately after the outage, when the reactor is stabilized at 50 percent, indicated reactor power will be _____ than actual power because neutron leakage from the core has _____.

A. higher; increased

B. higher; decreased

C. lower; increased

D. lower; decreased

ANSWER: A.

TOPIC: 191002
KNOWLEDGE: K1.18 [2.6/2.8]
QID: P2013 (B313)

A gas-filled radiation detector operating in the ion chamber is exposed to a constant gamma radiation field. If the applied voltage is increased but maintained within the ion chamber region, the rate of ion collection will...

A. increase, because more secondary ionizations are occurring in the detector.

B. stay approximately the same, because all of the primary ions were already being collected at the lower voltage.

C. increase, because fewer primary ions are recombining in the detector prior to reaching the electrodes.

D. stay approximately the same, because the ion chamber is operating at saturated conditions.

ANSWER: B.

TOPIC: 191002
KNOWLEDGE: K1.18 [2.6/2.8]
QID: P2014 (B2413)

What is the effect on a gas-filled neutron detector operating in the proportional region if the detector voltage is increased such that the detector operates closer to the high end of the proportional region?

A. Neutron-induced pulses will become so large that gamma pulse discrimination is no longer needed, yielding a more accurate neutron count rate.

B. The positive space charge effect will increase and prevent collection of both gamma- and neutron-induced pulses, yielding a less accurate neutron count rate.

C. A high rate of incident gamma radiation will result in the combination of multiple small gamma-induced pulses into larger pulses. The larger combined pulses will be counted as neutron-induced pulses, yielding a less accurate neutron count rate.

D. Detection of any single ionizing event will result in ionizing nearly the entire detector gas volume. The resulting large pulses will prevent the detector from differentiating between radiation types, yielding a less accurate neutron count rate.

ANSWER: C.

TOPIC: 191002
KNOWLEDGE: K1.18 [2.6/2.8]
QID: P2313 (B2613)

A gas-filled radiation detector operating in the proportional region is exposed to a constant gamma radiation field. If the applied voltage is decreased but maintained within the proportional region, the rate of ion collection will...

A. stay approximately the same, because all primary ions are collected as long as detector voltage remains in the proportional region.

B. stay approximately the same, because the detector is still operating at saturated conditions.

C. decrease, because a decreased space charge around the positive electrode reduces gas amplification.

D. decrease, because fewer secondary ionizations are occurring in the detector.

ANSWER: D.

TOPIC: 191002
KNOWLEDGE: K1.18 [2.6/2.8]
QID: P2413 (B2414)

A gas-filled radiation detector operating in the ion chamber region is exposed to a constant gamma radiation field. If the applied voltage is decreased but maintained within the ion chamber region, the rate of ion collection will...

A. stay approximately the same, because all of the primary ions continue to be collected and essentially no secondary ionizations are occurring.

B. stay approximately the same, because detector operation in the ionization chamber region is characterized by complete ionization of the detector gas.

C. decrease, because fewer primary ionizations are occurring in the detector as detector voltage decreases.

D. decrease, because fewer secondary ionizations are occurring in the detector as detector voltage decreases.

ANSWER: A.

TOPIC: 191002
KNOWLEDGE: K1.18 [2.6/2.8]
QID: P2513

A nuclear power plant startup is in progress immediately following a reactor refueling outage. The external nuclear instrumentation (NI) was calibrated at 50 percent power just prior to the refueling outage and has <u>not</u> been readjusted.

If actual reactor power level is increased to 50 percent and stabilized, NI power level will indicate _____ than actual reactor power level because, when compared to pre-outage 50 percent power level operation, _____.

A. higher; the total core fission rate has increased

B. lower; the total core fission rate has decreased

C. higher; the fission rate in the outer portion of the core has increased

D. lower; the fission rate in the outer portion of the core has decreased

ANSWER: D.

TOPIC: 191002
KNOWLEDGE: K1.18 [2.6/2.8]
QID: P2613 (B1114)

Which one of the following describes the reason for the high sensitivity of a gas-filled radiation detector operating in the Geiger-Mueller region?

A. Any radiation-induced ionization results in a large detector output pulse.

B. Geiger-Mueller detectors are longer than other types of radiation detectors, resulting in greater detector surface area.

C. The detector output is inversely proportional to the applied voltage within the Geiger-Mueller region.

D. High detector voltage allows differentiation between the various radiation types.

ANSWER: A.

TOPIC: 191002
KNOWLEDGE: K1.18 [2.6/2.8]
QID: P2713

During a refueling outage, the fuel assemblies were reconfigured to reduce the radial power peak at the center of the core while maintaining the same rated thermal power. Excore power range detectors were calibrated at 50 percent power just prior to the outage.

How will indicated reactor power compare to actual reactor power when the nuclear power plant is stabilized at 50 percent power following the outage?

A. Indicated reactor power will be higher than actual reactor power due to increased core neutron leakage.

B. Indicated reactor power will be higher than actual reactor power due to decreased core neutron leakage.

C. Indicated reactor power will be lower than actual reactor power due to decreased core neutron leakage.

D. Indicated reactor power will be lower than actual reactor power due to increased core neutron leakage.

ANSWER: A.

TOPIC: 191002
KNOWLEDGE: K1.18 [2.6/2.8]
QID: P2913 (B414)

Which one of the following statements describes the operation of a gas-filled radiation detector operating in the proportional region?

A. The number of ions collected from both primary and secondary ionizations is independent of the applied voltage.

B. Essentially all of the ions from primary ionizations are collected; the number of ions collected from secondary ionizations is independent of the applied voltage.

C. The number of ions collected from both primary and secondary ionizations varies directly with the applied voltage on a logarithmic scale.

D. Essentially all of the ions from primary ionizations are collected; the number of ions collected from secondary ionizations varies directly with the applied voltage on a logarithmic scale.

ANSWER: D.

TOPIC: 191002
KNOWLEDGE: K1.18 [2.6/2.8]
QID: P3413

A boron trifluoride (BF_3) detector (proportional counter) is normally used to monitor only source range core neutron level. How will the detector and source range count rate indication be affected if normal detector high voltage is inadvertently applied during reactor operation in the power range?

A. The BF_3 gas will become completely ionized and source range indication will stabilize at a constant low value.

B. The BF_3 gas will become completely ionized and source range indication will stabilize at a constant high value.

C. The detector electrodes will become exposed to an extremely high neutron flux and cause a false high reading on the source range indication.

D. The detector electrodes will become exposed to an extremely high gamma flux and cause a false high reading on the source range indication.

ANSWER: A.

TOPIC: 191002
KNOWLEDGE: K1.18 [2.6/2.8]
QID: P3906 (B3907)

A beta particle and an alpha particle enter and cause ionization in a gas-filled radiation detector operating in the Geiger-Mueller region. Which one of the following accurately compares the amplitude of the detector pulses caused by each type of radiation?

A. The beta particle pulse will be larger in amplitude.

B. The alpha particle pulse will be larger in amplitude.

C. The pulses will be the same for both types of radiation.

D. Cannot be determined without particle kinetic energy information.

ANSWER: C.

TOPIC: 191002
KNOWLEDGE: K1.18 [2.6/2.8]
QID: P4506 (B4507)

A nuclear power plant has been shut down for one month. A portable gas-filled radiation detector is needed to monitor shutdown reactor core neutron level from a location outside the reactor vessel. The detector must be able to distinguish between ionizations caused by gamma and neutron radiation.

Which region(s) of the gas-filled detector characteristic curve is/are acceptable for operation of the detector?

A. Geiger-Mueller, Ion Chamber, and Proportional regions are all acceptable.

B. Proportional region is acceptable, and Ion Chamber region also may be usable.

C. Ion Chamber region is acceptable, and Geiger-Mueller region also may be usable.

D. Geiger-Mueller region is acceptable, and Proportional region also may be usable.

ANSWER: B.

TOPIC: 191002
KNOWLEDGE: K1.18 [2.6/2.8]
QID: P4806 (B4807)

Quench gases are added to gas-filled radiation detectors that operate in the _____ region; the quench gases prevent a single ionization event from causing _____ in the detector gas volume.

A. ion chamber; multiple discharges

B. ion chamber; secondary ionizations

C. Geiger-Mueller; multiple discharges

D. Geiger-Mueller; secondary ionizations

ANSWER: C.

TOPIC: 191002
KNOWLEDGE: K1.18 [2.6/2.8]
QID: P4906 (B4907)

Which one of the following contains the pair of radiation detector types that are the most sensitive to low-energy beta and/or gamma radiation?

A. Geiger-Mueller and scintillation

B. Geiger-Mueller and ion chamber

C. Ion chamber and scintillation

D. Ion chamber and proportional

ANSWER: A.

TOPIC: 191002
KNOWLEDGE: K1.18 [2.6/2.8]
QID: P5206 (B5207)

A beta particle and an alpha particle with equal kinetic energies cause ionization in a gas-filled radiation detector. The detector is operating in the ion chamber region of the gas ionization curve. Which one of the following describes the amplitudes of the detector pulses caused by each type of radiation?

A. The beta particle pulse will be larger in amplitude.

B. The alpha particle pulse will be larger in amplitude.

C. The amplitudes of both pulses will be approximately equal for all detector voltages in the ion chamber region.

D. The amplitudes of both pulses will be approximately equal for all detector voltages in the ion chamber region, as well as all detector voltages outside the ion chamber region.

ANSWER: B.

TOPIC: 191002
KNOWLEDGE: K1.18 [2.6/2.8]
QID: P5306 (B5307)

Which one of the following types of radiation detectors is generally <u>not</u> used for measuring a high-intensity beta and gamma radiation field because of a relatively long detector recovery time, or dead time, following each ionization event.

A. Geiger-Mueller

B. Ion chamber

C. Proportional

D. Scintillation

ANSWER: A.

TOPIC: 191002
KNOWLEDGE: K1.18 [2.6/2.8]
QID: P5606 (B5607)

A proportional detector with pulse height discrimination circuitry is being used in a constant field of neutron and gamma radiation to provide source range neutron count rate indication. Assume that the pulse height discrimination setpoint does not change.

If the detector voltage is increased but maintained within the proportional region, count rate indication will increase because...

A. a single neutron- or gamma-induced ionizing event will result in multiple pulses inside the detector.

B. the ratio of the number of neutron-induced pulses to gamma-induced pulses inside the detector will increase.

C. the positive space charge effect will increase and promote the collection of both gamma- and neutron-induced pulses.

D. all detector pulses will increase in amplitude and previously uncounted gamma pulses will be added to the total count rate.

ANSWER: D.

TOPIC: 191002
KNOWLEDGE: K1.18 [2.6/2.8]
QID: P6006 (B6007)

Which one of the following types of radiation detectors uses a gas volume for radiation detection and will typically produce the weakest output signal if all of the detectors are placed in the same gamma radiation field?

A. Geiger-Mueller

B. Ion chamber

C. Proportional counter

D. Scintillation

ANSWER: B.

TOPIC: 191002
KNOWLEDGE: K1.18 [2.6/2.8]
QID: P6206 (B6206)

Which one of the following types of radiation detectors is typically the least accurate in determining the dose rate to a human body from an unspecified source of radiation?

A. Geiger-Mueller

B. Ion chamber

C. Proportional counter

D. Scintillation

ANSWER: A.

TOPIC: 191002
KNOWLEDGE: K1.18 [2.6/2.8]
QID: P6405 (B6407)

A fission chamber neutron detector is located in a constant neutron radiation field and is initially operating in the proportional region. If the voltage applied to the detector is changed such that the detector operates in the ion chamber region, the rate of neutron interactions in the detector will _____; and the amplitude of each neutron-induced detector pulse will _____.

A. increase; increase

B. decrease; decrease

C. remain the same; increase

D. remain the same; decrease

ANSWER: D.

TOPIC: 191002
KNOWLEDGE: K1.18 [2.6/2.8]
QID: P6505 (B6507)

Which one of the following describes the positive space charge effect associated with a gas-filled radiation detector?

A. Multiple detector pulses result from a single ionization event because positive ions form a cloud around the negative electrode, which increases the electric field strength, thereby initiating secondary ionizations.

B. Multiple detector pulses result from a single ionization event because positive ions form a cloud around the positive electrode, which increases the electric field strength, thereby initiating secondary ionizations.

C. The pulse amplitude resulting from an ionization event is reduced because positive ions form a cloud around the negative electrode, which reduces the electric field strength, thereby limiting secondary ionizations.

D. The pulse amplitude resulting from an ionization event is reduced because positive ions form a cloud around the positive electrode, which reduces the electric field strength, thereby limiting secondary ionizations.

ANSWER: D.

TOPIC: 191002
KNOWLEDGE: K1.18 [2.6/2.8]
QID: P6906 (B6906)

In which usable region(s) of the gas-filled detector ionization curve is the pulse height resulting from the detection of a 1 MeV beta particle the same as a 5 MeV alpha particle?

A. Geiger-Mueller only.

B. Geiger-Mueller and Ionization Chamber.

C. Proportional only.

D. Proportional and Ionization Chamber.

ANSWER: A.

TOPIC: 191002
KNOWLEDGE: K1.18 [2.6/2.8]
QID: P7206 (B7207)

Which one of the following personal radiation monitoring devices can be charged with DC voltage to "zero" the device prior to use?

A. Film badge

B. Alarming dosimeter

C. Thermoluminescent dosimeter

D. Self-reading pocket dosimeter

ANSWER: D.

TOPIC: 191002
KNOWLEDGE: K1.18 [2.6/2.8]
QID: P7505 (B7507)

A Geiger-Mueller detector with a "pancake" probe (often called a frisker) is being used to monitor personnel leaving a radiologically controlled area. The probe is equipped with a mica window.

Two individuals have radioactive skin contamination—one individual with <u>only</u> alpha emitters, and the other with <u>only</u> beta emitters. Both types of radiation are being emitted at the same rate. The same percentage of each type of radiation enters the probe's detection chamber and causes ionization.

Which one of the following describes the detector's count rate response to the alpha and beta radiation?

A. The count rate will be higher for the alpha radiation.

B. The count rate will be higher for the beta radiation.

C. The count rate will be the same for both types of radiation.

D. Cannot be determined without knowing the energy levels of the radiation.

ANSWER: C.

TOPIC: 191002
KNOWLEDGE: K1.18 [2.6/2.8]
QID: P7506

Just prior to a plant outage, the power range nuclear instruments (using excore detectors) were calibrated at 50 percent reactor power. During the outage, 40 fuel assemblies from the center of the core were exchanged with 40 higher enriched fuel assemblies from the outer portions of the core. No other fuel assemblies were affected.

Immediately after the outage, when the reactor is stabilized at 50 percent power, indicated reactor power will be _____ than actual reactor power because neutron leakage from the core has _____.

A. lower; decreased

B. lower; increased

C. higher; decreased

D. higher; increased

ANSWER: A.

TOPIC: 191002
KNOWLEDGE: K1.18 [2.6/2.8]
QID: P7613 (B7613)

A proportional detector with pulse height discrimination circuitry is being used in a constant field of neutron and gamma radiation to provide source range neutron count rate indication. Assume the pulse height discrimination value does <u>not</u> change.

If the detector voltage is decreased significantly, but maintained within the proportional region, the detector count rate indication will _____; and the detector will become _____ susceptible to the positive space charge effect.

A. decrease; less

B. decrease; more

C. remain the same; less

D. remain the same: more

ANSWER: A.

TOPIC: 191002
KNOWLEDGE: K1.18 [2.6/2.8]
QID: P7662 (B7662)

A gas-filled radiation detector that operates in the Geiger-Mueller region of the gas ionization curve is being used in a constant radiation field. If the detector's operating voltage is increased by 50 volts while remaining in the Geiger-Mueller region, the detector's count rate indication will _____; and the ability of the detector to detect gamma radiation will _____.

A. increase; improve

B. increase; remain the same

C. remain the same; improve

D. remain the same; remain the same

ANSWER: D.

TOPIC: 191002
KNOWLEDGE: K1.18 [2.6/2.8]
QID: P7672 (B7672)

A proportional detector with pulse height discrimination circuitry is being used in a constant field of neutron and gamma radiation to provide source range neutron count rate indication. Assume the pulse height discrimination value does <u>not</u> change.

If the detector voltage is increased significantly, but maintained within the proportional region, the detector count rate indication will _____; and the detector will become _____ susceptible to the positive space charge effect.

A. increase; less

B. increase; more

C. remain the same; less

D. remain the same: more

ANSWER: B.

TOPIC: 191002
KNOWLEDGE: K1.18 [2.6/2.8]
QID: P7701 (B7701)

A fission chamber detector is initially operating in the proportional region to measure neutron flux in the source range. If the voltage applied to the detector is changed such that the detector is operating in the ion chamber region, the detector will produce _____ pulses; and will experience a _____ positive space charge effect.

A. larger; larger

B. larger; smaller

C. smaller; larger

D. smaller; smaller

ANSWER: D.

TOPIC: 191002
KNOWLEDGE: K1.19 [3.1/3.3]
QID: P216 (B214)

Which one of the following describes a characteristic of a self-reading pocket dosimeter (SRPD)?

A. The output of an SRPD is a dose rate in mR/hr.

B. SRPDs are primarily sensitive to beta radiation.

C. SRPD readings must be considered inaccurate when they are dropped.

D. SRPDs hold their charge indefinitely when removed from a radiation field.

ANSWER: C.

TOPIC: 191002
KNOWLEDGE: K1.19 [3.1/3.3]
QID: P714 (B714)

Which one of the following types of radiation is the major contributor to the dose indication on a self-reading pocket dosimeter (SRPD)?

A. Alpha

B. Beta

C. Gamma

D. Neutron

ANSWER: C.

TOPIC: 191002
KNOWLEDGE: K1.19 [3.1/3.3]
QID: P5706 (B5707)

Which one of the following describes a characteristic of a self-reading pocket dosimeter?

A. Provides dose rate indication in mR/hr.

B. More sensitive to gamma radiation than beta radiation.

C. Contains crystals that luminesce when exposed to ionizing radiation.

D. Can be stored as an accurate record of lifetime radiation exposure.

ANSWER: B.

TOPIC: 191002
KNOWLEDGE: K1.19 [3.1/3.3]
QID: P6806 (B6807)

A nuclear plant worker normally wears a thermoluminescent dosimeter (TLD) or similar device for measuring radiation exposure. When a self-reading pocket dosimeter (SRPD) is also required, where will the SRPD be worn and why?

A. Below the waist near the TLD to measure radiation from the same source(s).

B. Below the waist away from the TLD to measure radiation from different sources.

C. Above the waist near the TLD to measure radiation from the same source(s).

D. Above the waist away from the TLD to measure radiation from different sources.

ANSWER: C.

TOPIC: 191002
KNOWLEDGE: K1.19 [3.1/3.3]
QID: P7633 (B7633)

A Geiger-Mueller detector with a “pancake” probe (often called a frisker) is being used to monitor workers leaving a radiologically controlled area for contamination. The probe is equipped with a mica window. The background detector count rate is 20 cpm.

As one individual’s shoe is scanned, the detector reading increases to 200 cpm. When a sheet of paper is placed between the probe and the shoe, the detector reading decreases to 60 cpm. Which one of the following is indicated by the decrease in the detector reading?

A. The contamination contains beta particles.

B. The contamination contains alpha particles.

C. The contamination does <u>not</u> contain beta particles.

D. The contamination does <u>not</u> contain alpha particles.

ANSWER: B.

TOPIC: 191002
KNOWLEDGE: K1.19 [3.1/3.3]
QID: P7653 (B7653)

A Geiger Mueller detector with a "pancake" probe (sometimes called a frisker) is being used to monitor for skin contamination. During frisking, the probe is more likely to detect contamination if the probe is held _____ than one-half inch from the skin; and is moved _____ than two inches per second.

A. farther; faster

B. farther; slower

C. closer; faster

D. closer; slower

ANSWER: D.

TOPIC: 191002
KNOWLEDGE: K1.19 [3.1/3.3]
QID: P7691 (B7691)

A nuclear plant worker normally wears a thermoluminescent dosimeter (TLD) or similar device for measuring whole body radiation exposure. When a self-reading pocket dosimeter (SRPD) is also required for whole body monitoring, where will the SRPD be worn and why?

A. Near the TLD to add exposure to the TLD measurement.

B. Near the TLD to measure radiation affecting the same part of the body.

C. Away from the TLD to add exposure to the TLD measurement.

D. Away from the TLD to measure radiation affecting a different part of the body.

ANSWER: B.

TOPIC: 191002
KNOWLEDGE: K1.20 [2.5/2.7]
QID: P1114

Which one of the following describes the ion collection that occurs in a proportional counter, such as a BF_3 detector?

A. A fraction of the ions created by primary ionizations are collected. No secondary ionizations take place.

B. Virtually all of the ions created by primary ionizations are collected. No secondary ionizations take place.

C. Virtually all of the ions created by primary ionizations along with a fraction of the ions created by secondary ionizations are collected.

D. Virtually all of the ions created by primary and secondary ionizations are collected.

ANSWER: D.

TOPIC: 191002
KNOWLEDGE: K1.20 [2.5/2.7]
QID: P1514 (B511)

A fission chamber neutron monitoring instrument is operating in the proportional region. If a complete loss of fission chamber gas pressure occurs, the instrument indication will fail...

A. upscale.

B. downscale.

C. as is.

D. to midscale.

ANSWER: B.

TOPIC: 191002
KNOWLEDGE: K1.20 [2.5/2.7]
QID: P3714

During reactor power operation, a reactor coolant sample is taken and analyzed. Which one of the following lists three radionuclides that are all indicative of a fuel cladding failure if detected in elevated concentrations in the reactor coolant sample?

A. Lithium-6, cobalt-60, and argon-41

B. Iodine-131, cesium-138, and strontium-89

C. Nitrogen-16, xenon-135, and manganese-56

D. Hydrogen-2, hydrogen-3, and oxygen-18

ANSWER: B.

TOPIC: 191002
KNOWLEDGE: K1.20 [2.5/2.7]
QID: P6406

During power operation, a reactor coolant sample is taken and analyzed. Which one of the following lists three nuclides that are all indicative of a possible fuel cladding failure if found to be at elevated concentrations in the reactor coolant sample?

A. Oxygen-18, iron-59, and zirconium-95

B. Cobalt-60, iodine-131, and xenon-135

C. Krypton-85, strontium-90, and cesium-136

D. Hydrogen-2, hydrogen-3, and nitrogen-16

ANSWER: C.

TOPIC: 191003
KNOWLEDGE: K1.01 [3.1/3.2]
QID: P17 (B1414)

The difference between the setpoint in an automatic controller and the steady-state value of the controlled parameter is called...

A. offset.

B. gain.

C. deadband.

D. feedback.

ANSWER: A.

TOPIC: 191003
KNOWLEDGE: K1.01 [3.1/3.2]
QID: P217 (B215)

The range of values around the setpoint of a measured variable where <u>no</u> <u>action</u> occurs in an automatic flow controller is called...

A. deviation.

B. error.

C. deadband.

D. bias.

ANSWER: C.

TOPIC: 191003
KNOWLEDGE: K1.01 [3.1/3.2]
QID: P715 (B1817)

An automatic flow controller is being used to position a valve in a cooling water system. The controller develops a flow error signal and then increases the magnitude of the signal to drive the valve operator.

The factor by which the magnitude of the flow error signal is increased is referred to as...

A. bias.

B. gain.

C. feedback.

D. offset.

ANSWER: B.

TOPIC: 191003
KNOWLEDGE: K1.01
QID: P1115

A typical flow controller uses a/an _____ method of control.

A. open-loop

B. on-off

C. closed-loop

D. external regulating

ANSWER: C.

TOPIC: 191003
KNOWLEDGE: K1.01 [3.1/3.2]
QID: P1518 (B1616)

Which one of the following terms is used to describe the delay between a process parameter change and the sensing of that change by the process controller?

A. Offset

B. Gain

C. Dead time

D. Time constant

ANSWER: C.

TOPIC: 191003
KNOWLEDGE: K1.01 [3.1/3.2]
QID: P1615 (B715)

An automatic flow controller is being used to position a valve in a cooling water system. A signal that is proportional to valve position is received by the controller. This signal is referred to as...

A. gain.

B. bias.

C. feedback.

D. error.

ANSWER: C.

TOPIC: 191003
KNOWLEDGE: K1.01 [3.1/3.2]
QID: P3715 (B3715)

A flow controller has proportional, integral, and derivative control features. Which one of the following lists the effect on the control features when the controller is switched from the automatic mode to the manual mode?

A. Only the derivative feature will be lost.

B. Only the integral and derivative features will be lost.

C. All proportional, integral, and derivative features will be lost.

D. All control features will continue to influence the controller output.

ANSWER: C.

TOPIC: 191003
KNOWLEDGE: K1.01 [3.1/3.2]
QID: P5607 (B5608)

Consider a direct-acting proportional flow controller that is maintaining flow rate at a value that is offset from the controller setpoint. If the controller's gain is increased, the controller's offset will _____; and the controller's proportional band will _____.

A. decrease; decrease

B. decrease; increase

C. increase; decrease

D. increase; increase

ANSWER: A.

TOPIC: 191003
KNOWLEDGE: K1.01 [3.1/3.2]
QID: P6107 (B6108)

Consider a direct-acting proportional flow controller that is maintaining flow rate at a value that is offset from the controller setpoint. If the controller's gain is decreased, the controller's offset will _____; and the controller's proportional band will _____.

A. decrease; decrease

B. decrease; increase

C. increase; decrease

D. increase; increase

ANSWER: D.

TOPIC: 191003
KNOWLEDGE: K1.02 [2.6/2.7]
QID: P218 (B3115)

An emergency diesel generator (DG) is operating as the only power source connected to an emergency bus. The governor of the DG is <u>directly</u> sensing DG _____ and will <u>directly</u> adjust DG _____ flow to maintain a relatively constant DG frequency.

A. speed; air

B. speed; fuel

C. load; air

D. load; fuel

ANSWER: B.

TOPIC: 191003
KNOWLEDGE: K1.02 [2.6/2.7]
QID: P417 (B417)

If the turbine shaft speed signal received by a typical turbine governor control system fails low during turbine startup, the turbine governor will cause turbine speed to...

A. increase until the mismatch with demanded turbine speed is nulled.

B. increase until an upper limit is reached or the turbine trips on overspeed.

C. decrease until the mismatch with demanded turbine speed is nulled.

D. decrease to a minimum speed setpoint.

ANSWER: B.

TOPIC: 191003
KNOWLEDGE: K1.02 [2.6/2.7]
QID: P1316

A diesel generator (DG) is the only power source connected to an emergency bus. In this alignment, the governor of the DG directly senses DG _____ and adjusts DG fuel flow to maintain a relatively constant DG _____.

A. voltage; voltage

B. voltage; frequency

C. speed; voltage

D. speed; frequency

ANSWER: D.

TOPIC: 191003
KNOWLEDGE: K1.02 [2.6/2.7]
QID: P1815 (B1016)

If the turbine shaft speed signal received by a typical turbine governor control system fails high during turbine startup, the turbine governor will cause turbine speed to...

A. increase until an upper limit is reached or the turbine trips on overspeed.

B. increase until the mismatch with the turbine speed demand signal is nulled.

C. decrease until a lower limit is reached or turbine steam flow is isolated.

D. decrease until the mismatch with the turbine speed demand signal is nulled.

ANSWER: C.

TOPIC: 191003
KNOWLEDGE: K1.03 [3.1/3.1]
QID: P616

Refer to the drawing of a pneumatic control system (see figure below).

An increasing steam generator (SG) water level will decrease the SG level control signal and ultimately reduce the control air pressure applied to the feed control valve.

If the level control signal is manually increased, how will the pneumatic control system affect SG level?

A. Level will decrease because the valve positioner will close more, which causes the feed control valve to close more.

B. Level will decrease because the valve positioner will open more, which causes the feed control valve to close more.

C. Level will increase because the valve positioner will close more, which causes the feed control valve to open more.

D. Level will increase because the valve positioner will open more, which causes the feed control valve to open more.

ANSWER: D.

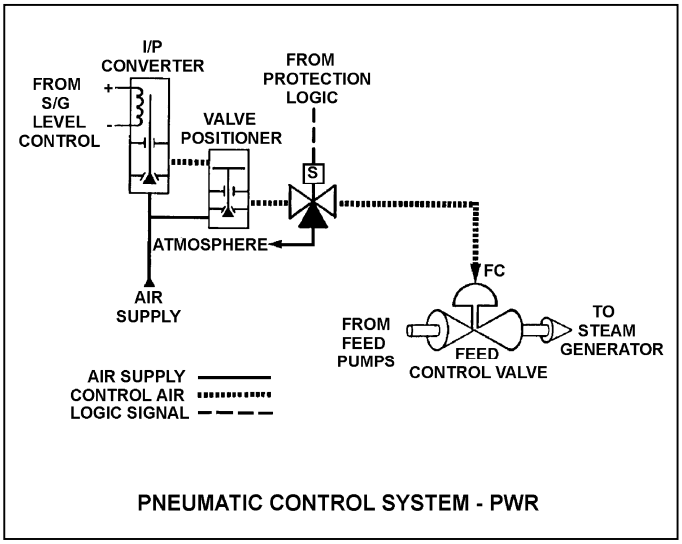

TOPIC: 191003
KNOWLEDGE: K1.03 [3.1/3.1]
QID: P2117

Refer to the drawing of a pneumatic control system (see figure below).

An increasing steam generator (SG) water level will decrease the SG level control signal and ultimately reduce the control air pressure applied to the actuator of the feed control valve.

If the level control signal fails high, SG water level will _____ because the control air pressure to the valve positioner will _____.

A. decrease; decrease

B. decrease; increase

C. increase; decrease

D. increase; increase

ANSWER: D.

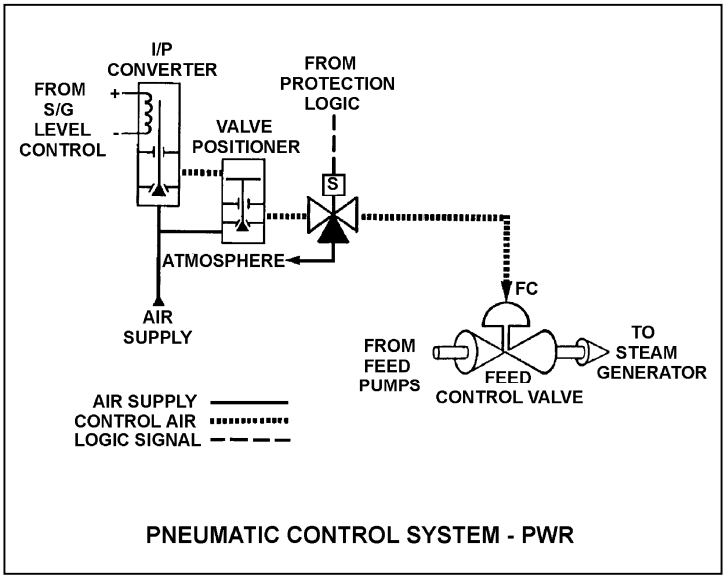

TOPIC: 191003
KNOWLEDGE: K1.04 [2.8/3.0]
QID: P617 (B516)

Refer to the drawing of a lube oil temperature control system (see figure below).

If the temperature transmitter fails high (high temperature output signal), the temperature controller will position the temperature control valve more _____, causing the actual heat exchanger lube oil outlet temperature to _____.

A. open; decrease

B. open; increase

C. closed; decrease

D. closed; increase

ANSWER: A.

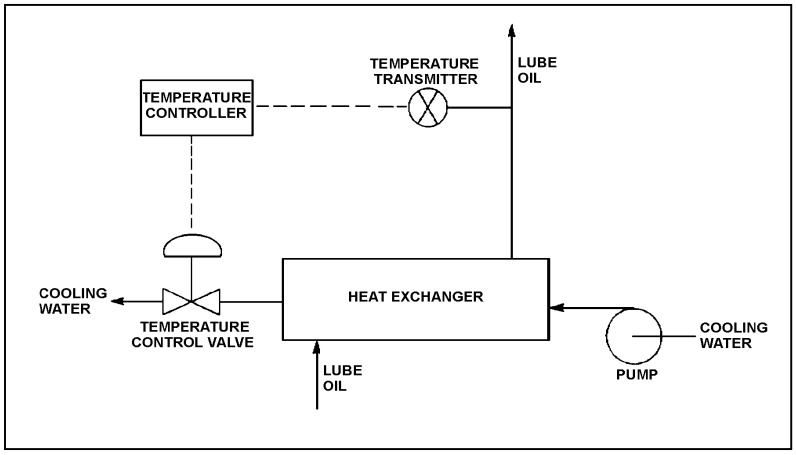

TOPIC: 191003
KNOWLEDGE: K1.04 [2.8/3.0]
QID: P1216

If a typical flow controller is in manual control, the output of the flow controller is determined by the...

A. operator.

B. system feedback.

C. plant computer.

D. flow error signal.

ANSWER: A.

TOPIC: 191003
KNOWLEDGE: K1.04 [2.8/3.0]
QID: P1315 (B917)

Refer to the drawing of a lube oil temperature control system (see figure below).

If the temperature transmitter fails low (low temperature output signal), the temperature controller will position the temperature control valve in the _____ direction, which causes the actual heat exchanger lube oil outlet temperature to _____.

A. close; increase

B. close; decrease

C. open; increase

D. open; decrease

ANSWER: A.

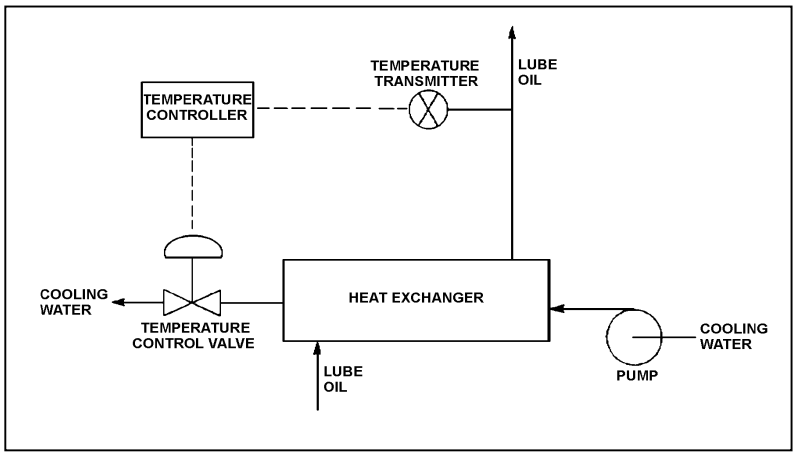

TOPIC: 191003
KNOWLEDGE: K1.04 [2.8/3.0]
QID: P1715 (B1914)

Refer to the drawing of a lube oil temperature control system (see figure below).

Which one of the following describes the type of control used in the lube oil temperature control system?

A. Open loop, because lube oil temperature feedback is being provided to the controller from the lube oil temperature transmitter.

B. Open loop, because lube oil temperature is being controlled by positioning a flow control valve in a separate system.

C. Closed loop, because lube oil temperature feedback is being provided to the controller from the lube oil temperature transmitter.

D. Closed loop, because lube oil temperature is being controlled by positioning a flow control valve in a separate system.

ANSWER: C.

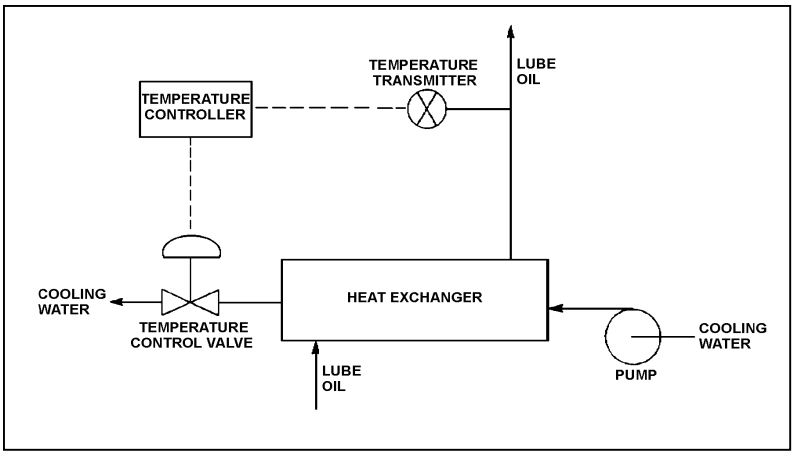

TOPIC: 191003
KNOWLEDGE: K1.04 [2.8/3.0]
QID: P2016 (B2016)

Refer to the drawing of a lube oil temperature control system (see figure below). The temperature control valve is currently 50 percent open.

If the cooling water inlet temperature decreases, the temperature controller will position the temperature control valve more _____, causing cooling water differential temperature through the heat exchanger to _____.

A. closed; increase

B. closed; decrease

C. open; increase

D. open; decrease

ANSWER: A.

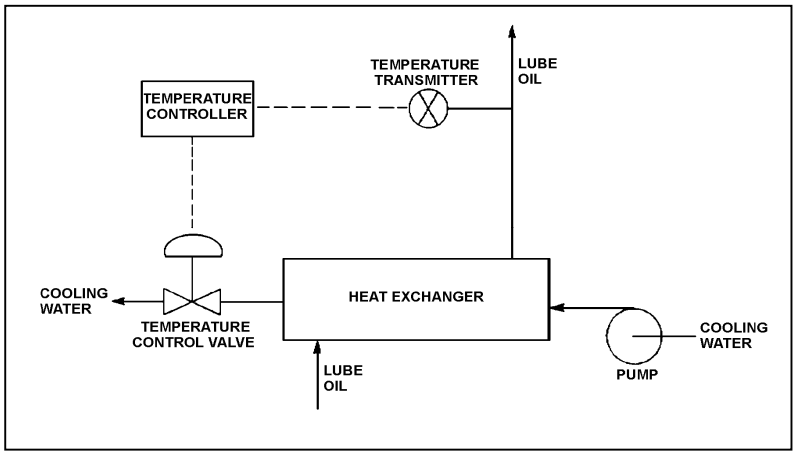

TOPIC: 191003
KNOWLEDGE: K1.04 [2.8/3.0]
QID: P3015 (B3016)

Refer to the drawing of a pressure alarm circuit (see figure below). The orientation of the bistable symbol indicates the characteristics of the bistable, as is normal for a control circuit diagram.

The bistable turns on to actuate an alarm at a system pressure of 100 psig. The bistable has a 5 psig deadband, or neutral zone.

If current system pressure is 90 psig, which one of the following describes the alarm circuit response as system pressure slowly increases to 110 psig?

A. The alarm is currently actuated and will turn off at 95 psig.

B. The alarm will actuate at 100 psig and will <u>not</u> turn off.

C. The alarm is currently actuated and will turn off at 105 psig.

D. The alarm will actuate at 100 psig and will turn off at 105 psig.

ANSWER: C.

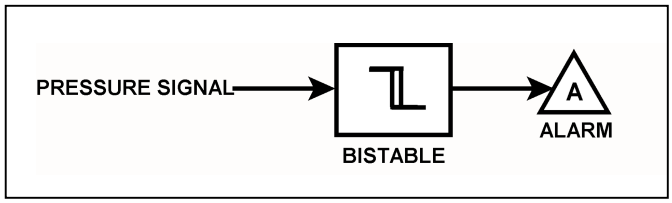

TOPIC: 191003
KNOWLEDGE: K1.04 [2.8/3.0]
QID: P3215 (B3216)

Refer to the drawing of a pressure alarm circuit (see figure below). The orientation of the bistable symbol indicates the characteristics of the bistable, as is normal for a control circuit diagram.

The bistable turns on to actuate an alarm at a system pressure of 100 psig. The bistable has a 5 psig deadband, or neutral zone.

If system pressure is currently 90 psig, which one of the following describes the alarm circuit response as system pressure slowly increases to 110 psig?

A. The alarm is currently actuated and will turn off at 95 psig.

B. The alarm will actuate at 100 psig and will <u>not</u> turn off.

C. The alarm is currently actuated and will turn off at 105 psig.

D. The alarm will actuate at 100 psig and will turn off at 105 psig.

ANSWER: B.

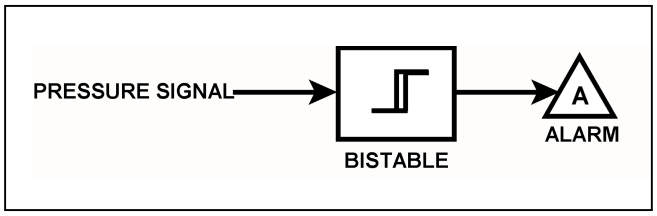

TOPIC: 191003
KNOWLEDGE: K1.04 [2.8/3.0]
QID: P3516

Refer to the drawing of a pressure alarm circuit (see figure below). The orientation of the bistable symbol indicates the characteristics of the bistable, as is normal for a control circuit diagram.

The bistable turns on to actuate an alarm at a system pressure of 100 psig. The bistable has a 5 psig deadband, or neutral zone.

If system pressure is currently 110 psig, which one of the following describes the alarm circuit response as system pressure slowly decreases to 90 psig?

A. The alarm will actuate at 100 psig and will not turn off.

B. The alarm will actuate at 100 psig and will turn off at 95 psig.

C. The alarm is currently actuated and will not turn off.

D. The alarm is currently actuated and will turn off at 95 psig.

ANSWER: A.

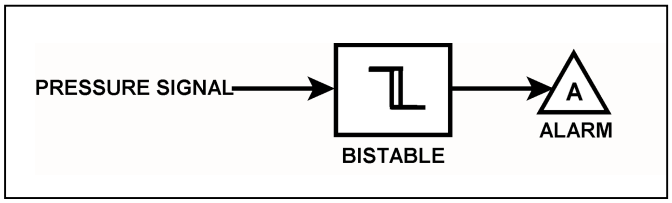

TOPIC: 191003
KNOWLEDGE: K1.04 [2.8/3.0]
QID: P3816 (B3817)

Refer to the drawing of four bistable symbols (see figure below).

A temperature controller uses a bistable that turns on to actuate a warning light when the controlled temperature reaches a low setpoint. The warning light extinguishes immediately after the temperature increases above the low setpoint.

Which one of the following bistable symbols indicates the characteristics of the bistable?

A. 1.

B. 2.

C. 3.

D. 4.

ANSWER: A.

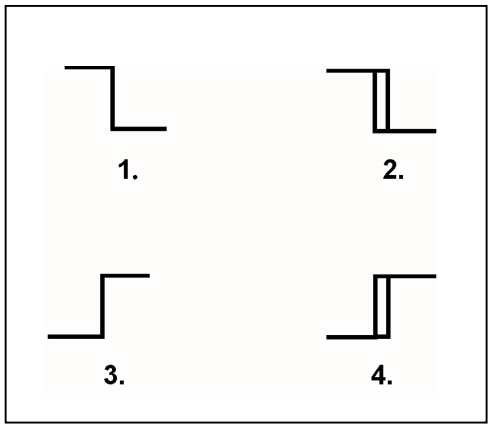

TOPIC: 191003
KNOWLEDGE: K1.04 [2.8/3.0]
QID: P4508 (B4509)

Refer to the drawing of four bistable symbols (see figure below).

A temperature controller uses a bistable that turns on to actuate a warning light when the controlled temperature reaches a high setpoint. The bistable turns off to extinguish the warning light when the temperature decreases to 5°F below the high setpoint.

Which one of the following bistable symbols indicates the characteristics of the bistable?

A. 1.

B. 2.

C. 3.

D. 4.

ANSWER: D.

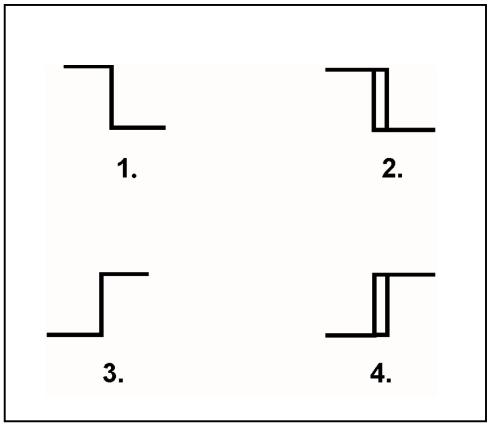

TOPIC: 191003
KNOWLEDGE: K1.04 [2.8/3.0]
QID: P4607 (B4609)

Refer to the drawing of a temperature alarm circuit (see figure below). The orientation of the bistable symbol indicates the characteristics of the bistable, as is normal for a control circuit diagram.

The bistable turns on to actuate an alarm at a temperature of 130°F. The bistable has a 5°F deadband, or neutral zone.

If the current temperature is 150°F, which one of the following describes the alarm circuit response as temperature slowly decreases to 110°F?

A. The alarm is currently actuated and will not turn off.

B. The alarm will actuate at 130°F and will not turn off.

C. The alarm is currently actuated and will turn off at 125°F.

D. The alarm will actuate at 130°F and will turn off at 125°F.

ANSWER: B.

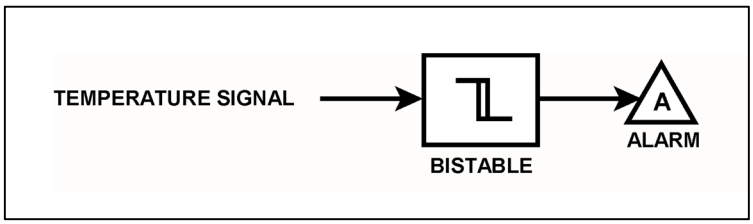

TOPIC: 191003
KNOWLEDGE: K1.04 [2.8/3.0]
QID: P5107 (B5109)

Refer to the drawing of a lube oil temperature control system (see figure below).

The temperature controller is a direct-acting proportional controller with a gain of 1.0. Which one of the following describes the effect of changing the gain to 2.0?

A. Half the temperature deviation from setpoint will produce a given controller output.

B. Twice the temperature deviation from setpoint will produce a given controller output.

C. The temperature control valve will move half as far for a given change in controller output.

D. The temperature control valve will move twice as far for a given change in controller output.

ANSWER: A.

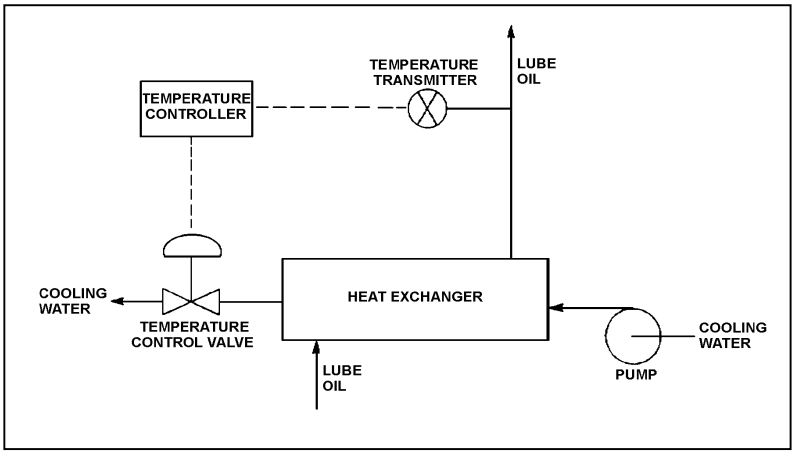

TOPIC: 191003
KNOWLEDGE: K1.04 [2.8/3.0]
QID: P5308 (B5309)

A direct-acting proportional controller is being used to control the temperature of lube oil exiting a heat exchanger. The controller's proportional band is 70°F to 120°F.

Which one of the following will be the controller's output percentage when the measured lube oil temperature is 83°F?

A. 13 percent

B. 26 percent

C. 37 percent

D. 74 percent

ANSWER: B.

TOPIC: 191003
KNOWLEDGE: K1.04 [2.8/3.0]
QID: P5508 (B5509)

A reverse-acting proportional controller is being used to control the temperature of lube oil exiting a heat exchanger. The controller's proportional band is 70°F to 120°F.

Which one of the following will be the controller's output percentage when the measured lube oil temperature is 83°F?

A. 13 percent

B. 26 percent

C. 74 percent

D. 87 percent

ANSWER: C.

TOPIC: 191003
KNOWLEDGE: K1.04 [2.8/3.0]
QID: P5608 (B5609)

The temperature of the water in a storage tank is monitored by a bistable alarm circuit. If water temperature decreases to 50°F, a bistable turns on to actuate an alarm indicator. As soon as the water temperature exceeds 50°F, the bistable turns off to clear the alarm.

Which one of the following bistable symbols indicates the characteristics of the bistable used in the alarm circuit?

A. 1.

B. 2.

C. 3.

D. 4.

ANSWER: A.

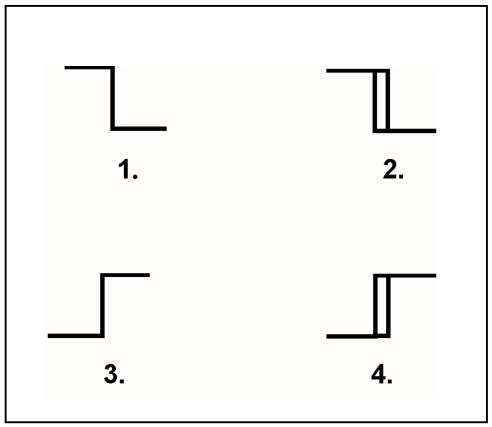

TOPIC: 191003
KNOWLEDGE: K1.04 [2.8/3.0]
QID: P5708 (B5709)

Refer to the drawing of a lube oil temperature control system (see figure below).

The temperature controller is a direct-acting proportional controller with a gain of 1.0. Which one of the following describes the effect of changing the gain to 2.0?

A. Increases the range of lube oil temperatures that produces a proportional controller response.

B. Increases the change in valve position resulting from a given change in lube oil temperature.

C. Increases the difference between the controller setpoint and the lube oil temperature at steady-state conditions.

D. Increases the lube oil temperature deviation from setpoint required to produce a given controller output.

ANSWER: B.

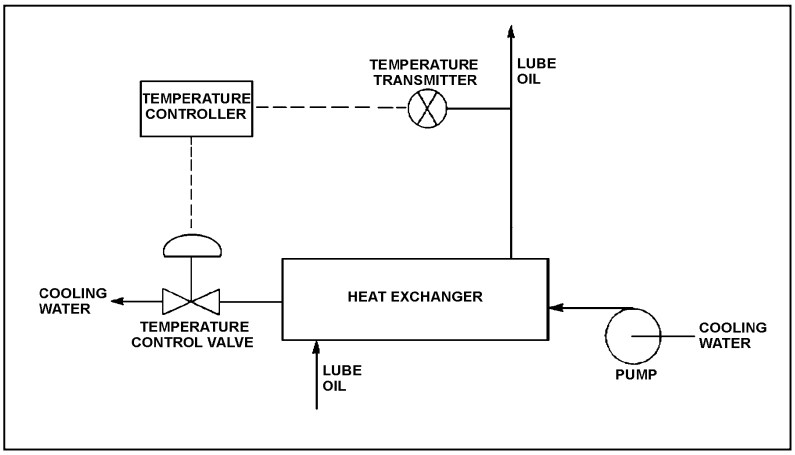

TOPIC: 191003
KNOWLEDGE: K1.04 [2.8/3.0]
QID: P5908 (B5908)

Refer to the drawing of a lube oil temperature control system (see figure below).

The temperature controller is a direct-acting proportional controller. Which one of the following describes the effect of changing the controller's gain from 1.0 to 2.0?

A. Half the change in measured temperature will produce the same change in controller input.

B. Twice the change in measured temperature will produce the same change in controller input.

C. The temperature control valve will move half as far for the same change in controller input.

D. The temperature control valve will move twice as far for the same change in controller input.

ANSWER: D.

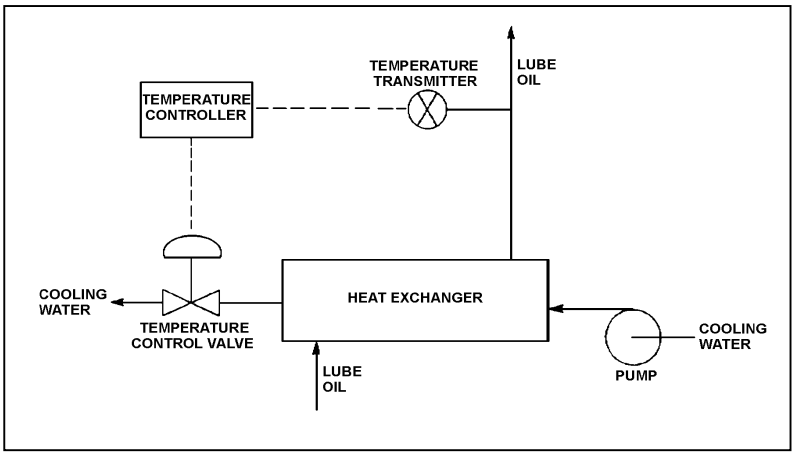

TOPIC: 191003
KNOWLEDGE: K1.04 [2.8/3.0]
QID: P6408 (B6409)

Refer to the drawing of a lube oil temperature control system (see figure below).

The temperature controller is a direct-acting proportional-integral controller with a gain of 1.0. A step increase in lube oil temperature results in an initial controller demand for the temperature control valve (TCV) to open an additional 10 percent. After the lube oil temperature stabilizes, the final TCV position is 60 percent open.

If the controller's gain was 2.0 rather than 1.0, the initial controller demand for the above temperature transient would be for the TCV to open an additional _____ percent; and the final TCV position would be _____ percent open.

A. 5; 60

B. 5; less than 60

C. 20; 60

D. 20; more than 60

ANSWER: C.

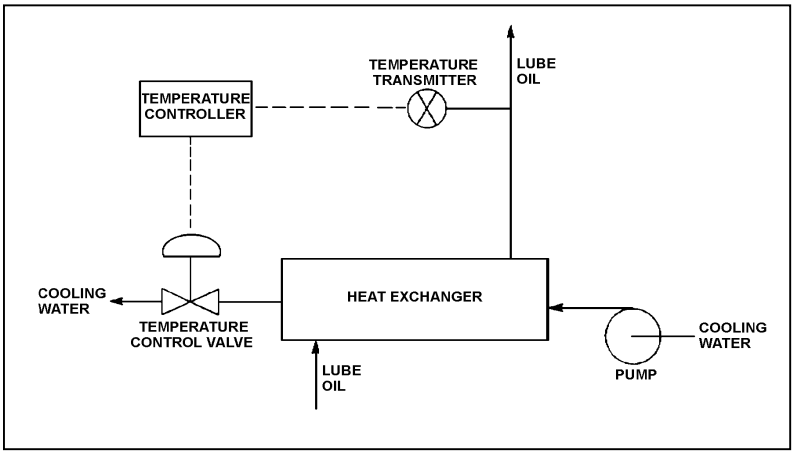

TOPIC: 191003
KNOWLEDGE: K1.04 [2.8/3.0]
QID: P6607 (B6609)

Refer to the drawing of a lube oil temperature control system (see figure below).

The temperature controller is a direct-acting proportional-integral controller with a gain of 1.0. All system temperatures are initially stable.

An increase in lube oil temperature causes the controller to open the temperature control valve (TCV) farther. What would be the effect on the TCV response if the controller gain was 2.0 rather than 1.0?

A. The final TCV position would be half as far from its initial position.

B. The final TCV position would be twice as far from its initial position.

C. The final TCV position would be the same, but the TCV initially would travel a greater distance in response to the lube oil temperature change.

D. The final TCV position would be the same, but the TCV initially would travel a shorter distance in response to the lube oil temperature change.

ANSWER: C.

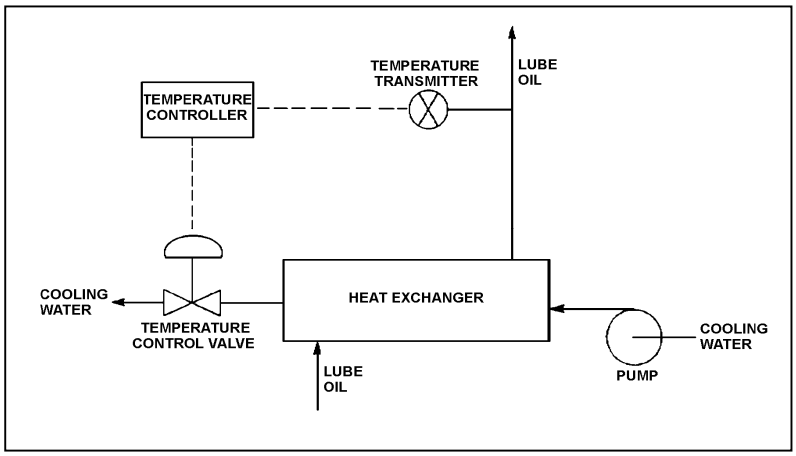

TOPIC: 191003
KNOWLEDGE: K1.04 [2.8/3.0]
QID: P6707 (B6709)

Refer to the drawing of four bistable symbols (see figure below).

A temperature controller uses a bistable that turns on to actuate a warning light when the controlled temperature reaches a low setpoint. The bistable turns off to extinguish the warning light when the temperature increases to 5°F above the low setpoint.

Which one of the following bistable symbols indicates the characteristics of the bistable?

A. 1.

B. 2.

C. 3.

D. 4.

ANSWER: B.

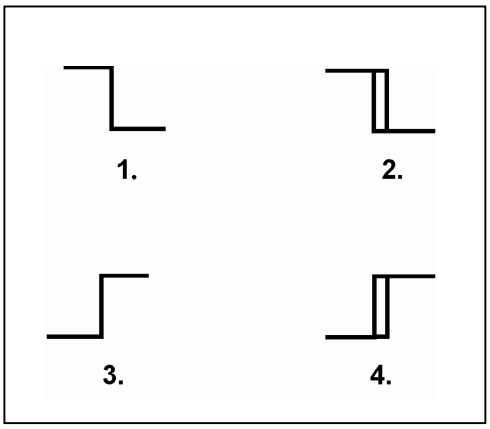

TOPIC: 191003
KNOWLEDGE: K1.04 [2.8/3.0]
QID: P6908 (B6909)

A direct-acting proportional controller is being used to control the temperature of lube oil exiting a heat exchanger. The controller's proportional band is 80°F to 130°F.

Which one of the following will be the controller's output percentage when the measured lube oil temperature is 92°F?

A. 12 percent

B. 24 percent

C. 38 percent

D. 76 percent

ANSWER: B.

TOPIC: 191003
KNOWLEDGE: K1.04 [2.8/3.0]
QID: P7622 (B7623)

Refer to the drawing of a temperature alarm circuit (see figure below). The orientation of the bistable symbol indicates the characteristics of the bistable, as is normal for a control circuit diagram.

The bistable turns on to actuate an alarm at a temperature of 130°F. The bistable has a 5°F deadband, or neutral zone.

If the current temperature is 150°F, which one of the following describes the alarm circuit response as temperature slowly decreases to 110°F?

A. The alarm is currently actuated and will not turn off.

B. The alarm will actuate at 130°F and will not turn off.

C. The alarm is currently actuated and will turn off at 125°F.

D. The alarm will actuate at 130°F and will turn off at 125°F.

ANSWER: C.

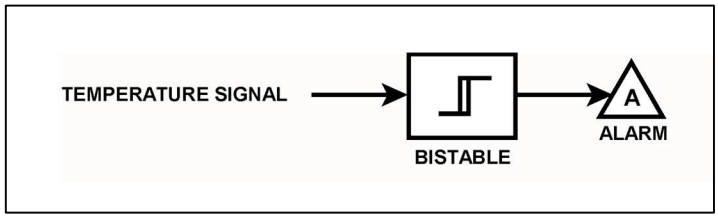

TOPIC: 191003
KNOWLEDGE: K1.04 [2.8/3.0]
QID: P7692 (B7693)

Refer to the drawing of a pressure alarm circuit (see figure below). The orientation of the bistable symbol indicates the characteristics of the bistable, as is normal for a control circuit diagram.

The bistable turns on to actuate an alarm at a system pressure of 100 psig. The bistable has a 5 psig deadband, or neutral zone.

If system pressure increases to 105 psig, and subsequently decreases to _____; the status of the alarm will be _____.

A. 100 psig; off

B. 98 psig; off

C. 94 psig; on

D. 92 psig; off

ANSWER: D.

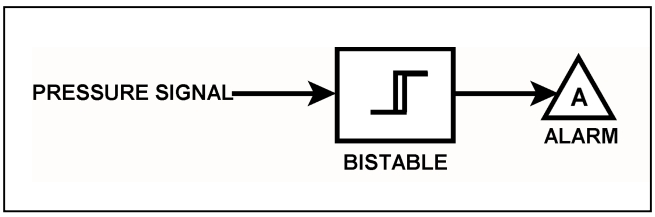

TOPIC: 191003
KNOWLEDGE: K1.04 [2.8/3.0]
QID: P7702 (B7703)

Refer to the drawing of a pressure alarm circuit (see figure below). The orientation of the bistable symbol indicates the characteristics of the bistable, as is normal for a control circuit diagram.

The bistable will turn on at a system pressure of 100 psig. The bistable has a 5 psig deadband, or neutral zone.

If system pressure is currently 98 psig, which one of the following describes the status of the alarm?

A. The alarm is <u>not</u> actuated.

B. The alarm is actuated and will turn off at 95 psig.

C. The alarm is actuated and will turn off at 105 psig.

D. Additional information is needed to determine the status of the alarm.

ANSWER: D.

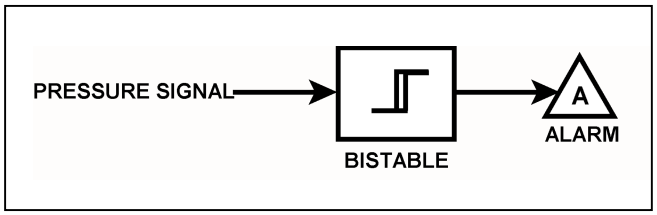

TOPIC: 191003
KNOWLEDGE: K1.05 [2.5/2.8]
QID: P18

The output pressure of a pneumatic controller is typically insufficient to drive a valve actuator accurately. To overcome this problem, a pneumatic control system will normally employ a...

A. valve actuating lead/lag unit.

B. pressure regulator.

C. valve positioner.

D. pressure modulator.

ANSWER: C.

TOPIC: 191003
KNOWLEDGE: K1.05 [2.5/2.8]
QID: P318 (B317)

Refer to the drawing of a pneumatic control system (see figure below).

The purpose of the valve positioner is to convert...

A. a small control air pressure into a proportionally larger air pressure to adjust valve position.

B. a large control air pressure into a proportionally smaller air pressure to adjust valve position.

C. pneumatic force into mechanical force to adjust valve position.

D. mechanical force into pneumatic force to adjust valve position.

ANSWER: A.

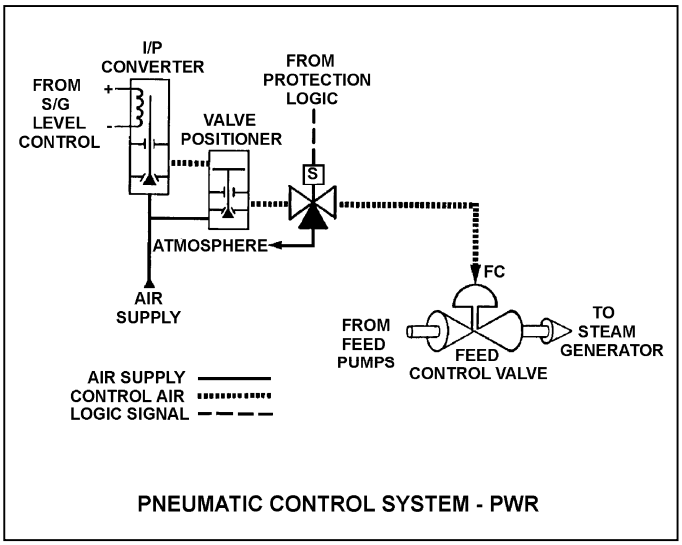

TOPIC: 191003
KNOWLEDGE: K1.05 [2.5/2.8]
QID: P1116 (B2816)

Which one of the following describes a characteristic of pneumatic valve positioners?

A. They provide auto and manual demand signals to valve controllers and valve actuators.

B. They supply air pressure to valve actuators in response to a control signal to regulate valve position.

C. They can either receive or supply air to/from valve controllers, depending on the direction of valve travel.

D. They act independently of the valve controller, in order to prevent pressure transients on the valve actuator diaphragm.

ANSWER: B.

TOPIC: 191003
KNOWLEDGE: K1.05 [2.5/2.8]
QID: P1117 (B1116)

An air-operated isolation valve requires 4,800 pounds-force from its diaphragm actuator and 4 inches of stem travel for proper operation. The valve positioner can supply up to 80 psig of air pressure to the actuator.

What is the minimum surface area of the actuator diaphragm required for proper valve operation?

A. 15 square inches

B. 60 square inches

C. 120 square inches

D. 240 square inches

ANSWER: B.

TOPIC: 191003
KNOWLEDGE: K1.05 [2.5/2.8]
QID: P1217 (B1416)

What is the purpose of a valve positioner in a typical pneumatic valve control system?

A. Convert the valve controller pneumatic output signal into a mechanical force to position the valve.

B. Convert the valve controller pneumatic output signal into an electrical output to position the valve.

C. Compare valve controller pneumatic output signal to setpoint error, and adjust valve actuator air supply pressure to position the valve.

D. Compare valve controller pneumatic output signal to valve position, and adjust valve actuator air supply pressure to position the valve.

ANSWER: D.

TOPIC: 191003
KNOWLEDGE: K1.05 [2.5/2.8]
QID: P1516 (B1517)

An air-operated isolation valve requires 3,200 pounds-force from its diaphragm actuator and 4 inches of stem travel for proper operation. The area of the actuator diaphragm is 80 square inches.

What is the approximate air pressure required for proper valve operation?

A. 10 psig

B. 25 psig

C. 40 psig

D. 55 psig

ANSWER: C.

TOPIC: 191003
KNOWLEDGE: K1.05 [2.5/2.8]
QID: P1618 (B1617)

An air-operated isolation valve requires 3,600 pounds-force from its diaphragm actuator and 4 inches of stem travel for proper operation. The valve positioner can supply up to 120 psig of air pressure to the actuator.

What is the minimum surface area of the actuator diaphragm required for proper valve operation?

A. 30 square inches

B. 60 square inches

C. 90 square inches

D. 120 square inches

ANSWER: A.

TOPIC: 191003
KNOWLEDGE: K1.05 [2.5/2.8]
QID: P1716

An air-operated isolation valve requires 2,400 pounds-force applied to the top of the actuator diaphragm to open. The actuator diaphragm has a surface area of 60 square inches and the valve stem travels 2 inches from fully open to fully closed.

If control air pressure to the valve actuator begins to increase from 0 psig, which one of the following is the approximate air pressure required to open the valve?

A. 10 psig

B. 20 psig

C. 30 psig

D. 40 psig

ANSWER: D.

TOPIC: 191003
KNOWLEDGE: K1.05 [2.5/2.8]
QID: P2116 (B2117)

An air-operated isolation valve requires 3,200 pounds-force from its diaphragm actuator and 4 inches of stem travel for proper operation. The area of the actuator diaphragm is 160 square inches.

What is the approximate air pressure required for proper valve operation?

A. 20 psig

B. 40 psig

C. 60 psig

D. 80 psig

ANSWER: A.

TOPIC: 191003
KNOWLEDGE: K1.05 [2.5/2.8]
QID: P2216 (B3317)

An air-operated isolation valve requires 2,800 pounds-force (lbf) from its diaphragm actuator and 4 inches of stem travel for proper operation. The valve positioner can supply up to 117 psig of air pressure to the actuator.

What is the minimum surface area of the actuator diaphragm required for proper valve operation?

A. 24 square inches

B. 48 square inches

C. 94 square inches

D. 138 square inches

ANSWER: A.

TOPIC: 191003
KNOWLEDGE: K1.05 [2.5/2.8]
QID: P2416 (B2917)

Which one of the following describes the operation of a typical pneumatic valve positioner?

A. Compares the valve controller demand signal with actual valve position and sends an error signal to the valve controller for adjustment of the demand signal.

B. Compares the valve controller automatic and manual setpoints and sends an error signal to the valve controller to ensure the manual demand signal is tracking the automatic demand signal.

C. Receives a valve position error signal from the valve controller and positions the valve as necessary to null the valve position error signal.

D. Receives a demand signal from the valve controller and supplies the appropriate air pressure to the valve actuator to move the valve to the demanded position.

ANSWER: D.

TOPIC: 191003
KNOWLEDGE: K1.05 [2.5/2.8]
QID: P2417 (B2416)

An air-operated isolation valve requires 3,600 pounds-force applied to the top of the actuator diaphragm to open. The actuator diaphragm has a diameter of 9 inches and the valve stem travels 3 inches from fully open to fully closed.

If control air pressure to the valve actuator begins to increase from 0 psig, which one of the following is the approximate air pressure at which the valve will begin to open?

A. 14 psig

B. 57 psig

C. 81 psig

D. 127 psig

ANSWER: B.

TOPIC: 191003
KNOWLEDGE: K1.05 [2.5/2.8]
QID: P2517 (B2516)

An air-operated isolation valve requires 2,400 pounds-force applied to the top of the actuator diaphragm to open. The actuator diaphragm has a diameter of 12 inches.

If control air pressure to the valve actuator begins to increase from 0 psig, which one of the following is the approximate air pressure at which the valve will begin to open?

A. 21 psig

B. 34 psig

C. 43 psig

D. 64 psig

ANSWER: A.

TOPIC: 191003
KNOWLEDGE: K1.05 [2.5/2.8]
QID: P2617 (B2216)

Which one of the following describes a characteristic of pneumatic valve positioners?

A. They can provide automatic and manual demand signals to pneumatic controllers and valve actuators.

B. They can increase or decrease air pressure to valve actuators to obtain the proper valve response.

C. They can either supply or receive air to/from pneumatic controllers, depending on the direction of valve travel.

D. They can increase air pressure to valve actuators above existing main air header pressure.

ANSWER: B.

TOPIC: 191003
KNOWLEDGE: K1.05 [2.5/2.8]
QID: P2716 (B2716)

An air-operated isolation valve requires 3,600 pounds-force applied to the top of the actuator diaphragm to open. The actuator diaphragm has a diameter of 8 inches.

If control air pressure to the valve actuator begins to increase from 0 psig, which one of the following is the approximate air pressure at which the valve will begin to open?

A. 32 psig

B. 45 psig

C. 56 psig

D. 72 psig

ANSWER: D.

TOPIC: 191003
KNOWLEDGE: K1.05 [2.5/2.8]
QID: P2917 (B2915)

An air-operated isolation valve requires 2,400 pounds-force applied to the top of the actuator diaphragm to open against spring pressure. The actuator diaphragm has a diameter of 12 inches.

If control air pressure to the valve actuator begins to decrease from 100 psig, which one of the following is the approximate air pressure at which the valve will begin to close?

A. 5 psig

B. 17 psig

C. 21 psig

D. 66 psig

ANSWER: C.

TOPIC: 191003
KNOWLEDGE: K1.06 [2.3/2.6]
QID: P419 (B1316)

Refer to the drawing of a flyball-weight mechanical speed governor (see figure below).

In a flyball-weight mechanical speed governor, the purpose of the spring on the flyball mechanism is to _____ centrifugal force by driving the flyballs _____.

A. counteract; outward

B. aid; inward

C. counteract; inward

D. aid; outward

ANSWER: C.

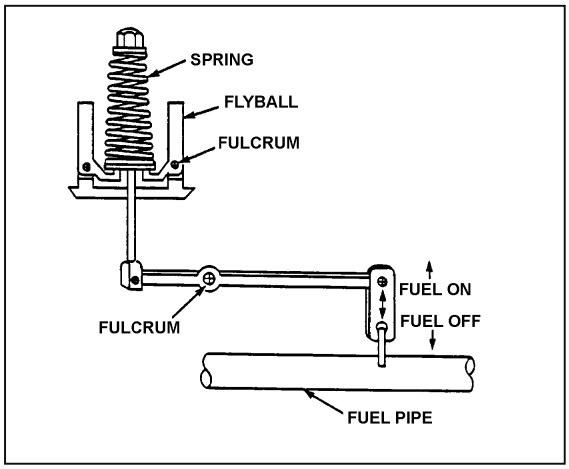

TOPIC: 191003
KNOWLEDGE: K1.06 [2.3/2.6]
QID: P1818 (B1815)

A diesel generator is supplying an isolated electrical bus with the governor operating in the isochronous mode. If a large electrical load is started on the bus, generator frequency will...

A. initially decrease, then increase and stabilize below the initial value.

B. initially decrease, then increase and stabilize at the initial value.

C. initially decrease, then increase and stabilize above the initial value.

D. remain constant during and after the load start.

ANSWER: B.

TOPIC: 191003
KNOWLEDGE: K1.06 [2.3/2.6]
QID: P2018 (B2015)

A diesel generator is supplying an isolated electrical bus with the governor operating in the isochronous mode. If a large electrical bus load trips, generator frequency will...

A. initially increase, then decrease and stabilize below the initial value.

B. initially increase, then decrease and stabilize at the initial value.

C. initially increase, then decrease and stabilize above the initial value.

D. remain constant during and after the load trip.

ANSWER: B.

TOPIC: 191003
KNOWLEDGE: K1.06 [2.3/2.6]
QID: P2818 (B2817)

A diesel generator (DG) is supplying an isolated electrical bus with the DG governor operating in the speed droop mode. Assuming the DG does not trip, if a large electrical bus load trips, bus frequency will initially...

A. increase, then decrease and stabilize below the initial value.

B. increase, then decrease and stabilize above the initial value.

C. decrease, then increase and stabilize below the initial value.

D. decrease, then increase and stabilize above the initial value.

ANSWER: B.

TOPIC: 191003
KNOWLEDGE: K1.07 [2.3/2.6]
QID: P1019

Which one of the following refers to the transfer of controller modes from Automatic to Manual or Manual to Automatic without causing a system perturbation?

A. A direct transfer

B. A deadband transfer

C. A bumpless transfer

D. An analog-to-digital transfer

ANSWER: C.

TOPIC: 191003
KNOWLEDGE: K1.08 [2.1/2.6]
QID: P3617 (B3616)

Refer to the drawing of a water storage tank with an automatic level control system (see figure below).

Given:

- The drain valve fails open on loss of controller output signal.
- The level sensor output signal changes directly with tank water level.

For proper automatic control of tank water level, the controller must be _____; and the control loop must be _____.

A. direct-acting; open

B. direct-acting; closed

C. reverse-acting; open

D. reverse-acting; closed

ANSWER: D.

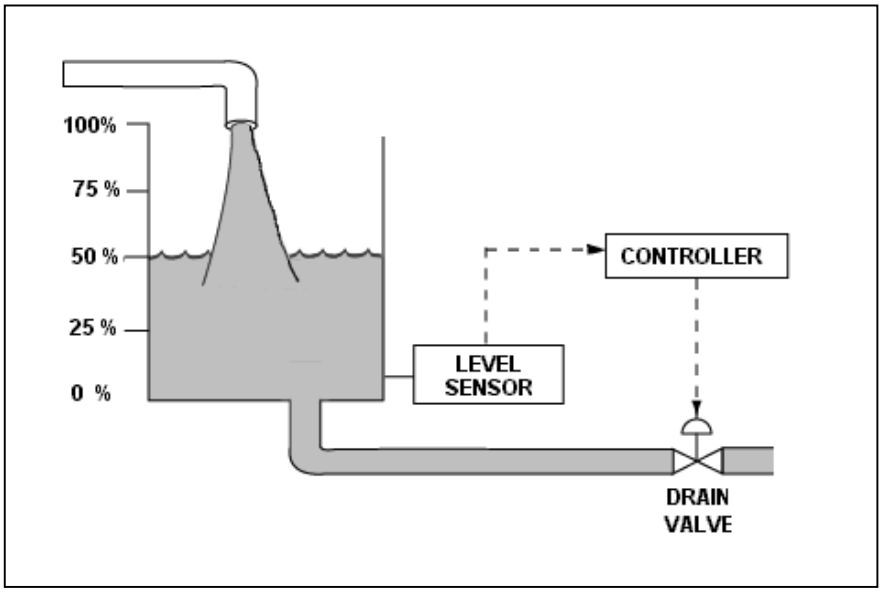

TOPIC: 191003
KNOWLEDGE: K1.08 [2.1/2.6]
QID: P4109 (B4108)

Refer to the drawing of a water storage tank with an automatic level control system (see figure below).

Given:

- The drain valve fails closed on loss of controller output signal.
- The level sensor output signal changes directly with tank water level.

For proper automatic control of tank water level, the controller must be _____; and the control loop must be _____.

A. direct-acting; open

B. direct-acting; closed

C. reverse-acting; open

D. reverse-acting; closed

ANSWER: B.

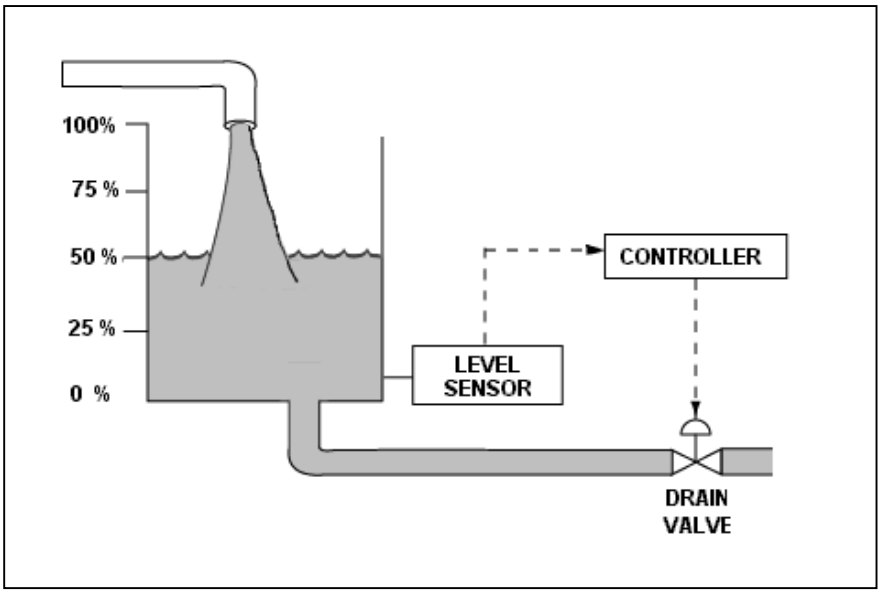

TOPIC: 191003
KNOWLEDGE: K1.08 [2.1/2.6]
QID: P4408 (B4408)

The water level in a water storage tank is being controlled by an automatic bistable level controller. If water level increases to 70 percent, the controller bistable turns on to open a tank drain valve. When water level decreases to 60 percent, the controller bistable turns off to close the drain valve.

Which one of the following bistable symbols indicates the characteristics of the bistable used in the level controller?

A. 1.

B. 2.

C. 3.

D. 4.

ANSWER: D.

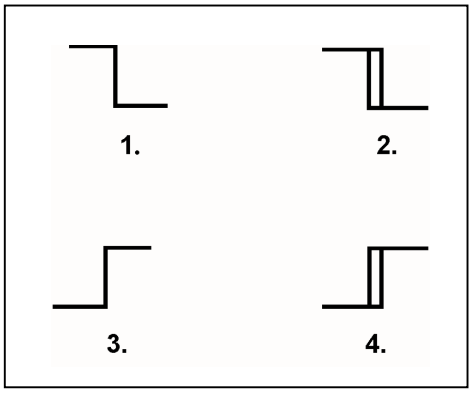

TOPIC: 191003
KNOWLEDGE: K1.08 [2.1/2.6]
QID: P4707 (B4708)

Refer to the valve controller logic diagram (see figure below).

Which one of the following combinations of inputs will result in the valve receiving an OPEN signal?

	INPUTS			
	1.	2.	3.	4.
A.	On	Off	Off	On
B.	Off	On	On	Off
C.	On	Off	On	Off
D.	Off	On	Off	On

ANSWER: B.

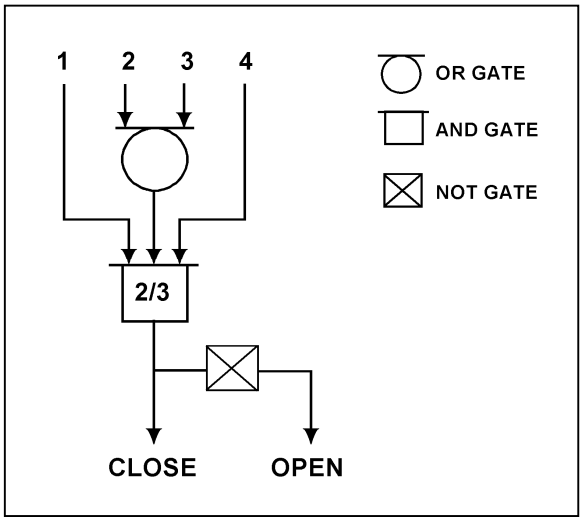

TOPIC: 191003
KNOWLEDGE: K1.08 [2.1/2.6]
QID: P4909 (B4908)

The water level in a water storage tank is being controlled by an automatic bistable level controller. If water level increases to 70 percent, the controller bistable turns off to open a tank drain valve. When water level decreases to 60 percent, the controller bistable turns on to close the drain valve.

Which one of the following bistable symbols indicates the characteristics of the bistable used in the level controller?

A. 1.

B. 2.

C. 3.

D. 4.

ANSWER: B.

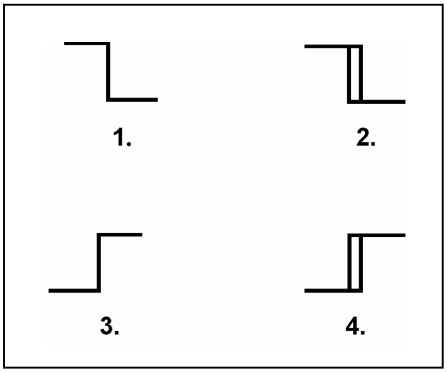

TOPIC: 191003
KNOWLEDGE: K1.08 [2.1/2.6]
QID: P5009 (B5009)

Refer to the valve controller logic diagram (see figure below).

Which one of the following combinations of inputs will result in the valve receiving a CLOSE signal?

	INPUTS			
	1.	2.	3.	4.
A.	On	On	Off	Off
B.	Off	Off	On	Off
C.	On	Off	Off	On
D.	On	On	On	Off

ANSWER: B.

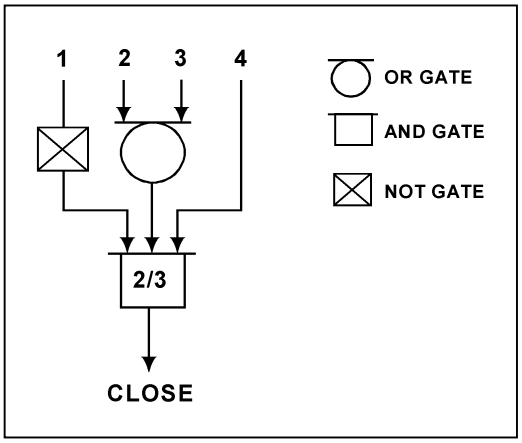

TOPIC: 191003
KNOWLEDGE: K1.09 [2.4/2.5]
KNOWLEDGE: K1.08 [2.1/2.6]
QID: P319 (B316)

Which one of the following describes the response of a direct-acting proportional-integral controller, operating in automatic mode, to an increase in the controlled parameter above the controller setpoint?

A. The controller will develop an output signal that continues to increase until the controlled parameter equals the controller setpoint, at which time the output signal stops increasing.

B. The controller will develop an output signal that will remain directly proportional to the difference between the controlled parameter and the controller setpoint.

C. The controller will develop an output signal that continues to increase until the controlled parameter equals the controller setpoint, at which time the output signal becomes zero.

D. The controller will develop an output signal that will remain directly proportional to the rate of change of the controlled parameter.

ANSWER: A.

TOPIC: 191003
KNOWLEDGE: K1.08 [2.1/2.6]
QID: P5409 (B5408)

Refer to the valve controller logic diagram (see figure below).

Which one of the following combinations of inputs will result in the valve receiving an OPEN signal?

	INPUTS			
	1.	2.	3.	4.
A.	On	Off	On	On
B.	Off	On	Off	Off
C.	On	Off	Off	On
D.	Off	On	On	Off

ANSWER: B.

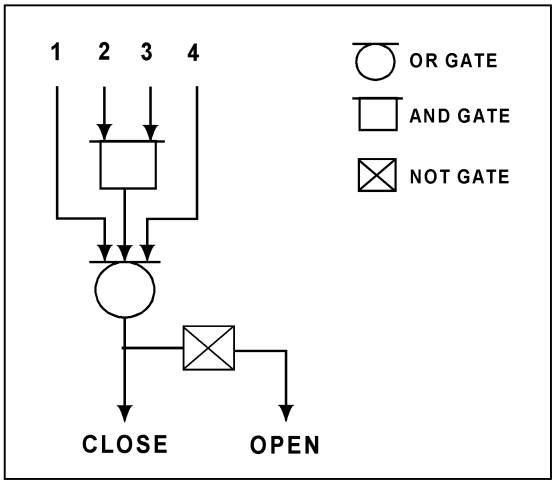

TOPIC: 191003
KNOWLEDGE: K1.08 [2.1/2.6]
QID: P6809 (B6808)

Refer to the logic diagram for a valve controller (see figure below).

Which one of the following combinations of inputs will result in the valve receiving a CLOSE signal?

	INPUTS			
	1	2	3	4
A.	On	On	On	On
B.	Off	On	On	On
C.	On	Off	Off	Off
D.	Off	On	On	Off

ANSWER: B.

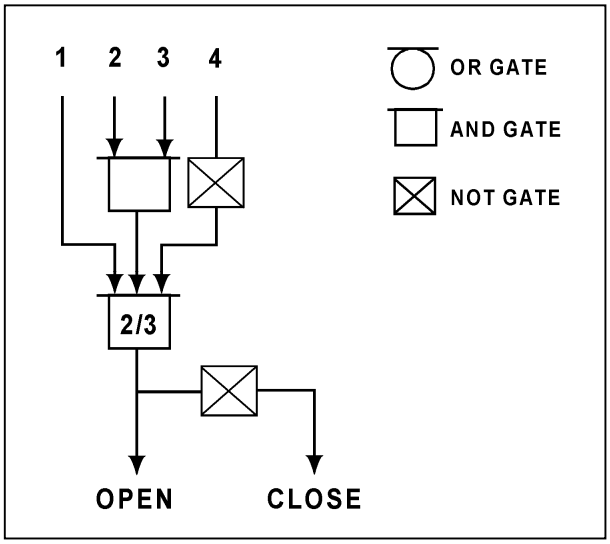

TOPIC: 191003
KNOWLEDGE: K1.08 [2.1/2.6]
QID: P7007 (B7008)

Refer to the drawing of a lube oil temperature control system (see figure below).

A direct-acting proportional temperature controller is being used to control the heat exchanger lube oil outlet temperature. When the lube oil outlet temperature matches the controller setpoint of 90°F, the controller output signal is 50 percent.

Current lube oil outlet temperature is stable at 100°F with the controller output signal at 70 percent.

What is the temperature proportional band for this controller?

A. 90°F to 140°F

B. 90°F to 115°F

C. 65°F to 140°F

D. 65°F to 115°F

ANSWER: D.

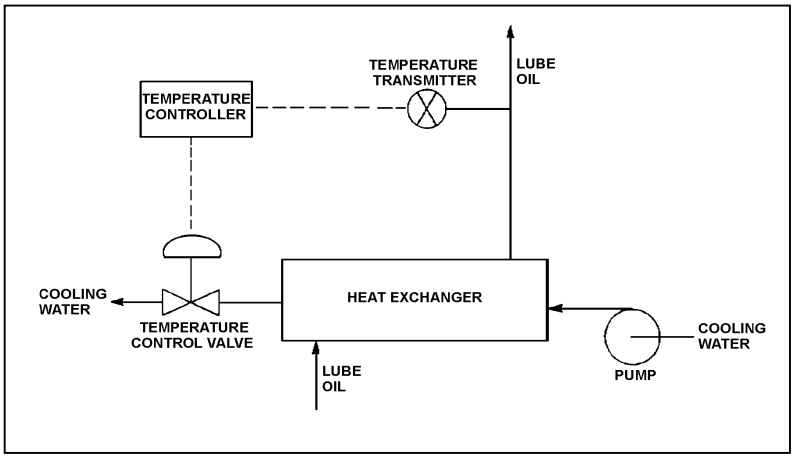

TOPIC: 191003
KNOWLEDGE: K1.08 [2.1/2.6]
QID: P7108 (B7109)

The level in a condensate collection tank is being controlled by an automatic level controller using proportional-only control. Initially the tank level is stable, but then the flow into the tank increases and stabilizes at a higher flow rate.

As tank level increases, the controller positions a drain valve more open than necessary to stabilize the level. As tank level decreases, the controller positions the drain valve more closed than necessary to stabilize the level. This cycle is repeated continuously, never reaching a stable tank level or drain valve position.

The excessive valve positioning described above could be caused by the controller's gain being too _____; or by the controller's proportional band being too _____.

A. low; wide

B. low; narrow

C. high; wide

D. high; narrow

ANSWER: D.

TOPIC: 191003
KNOWLEDGE: K1.08 [2.1/2.6]
QID: P7309 (B7309)

A proportional controller is being used to control the water level in a tank. When the tank water level matches the controller setpoint of 50 percent, the controller output signal is 50 percent.

Tank water level begins to rise and the controller stabilizes the water level at 60 percent, at which time the controller output signal is 90 percent.

What is the offset for this controller at the 60 percent tank water level?

A. 10 percent

B. 30 percent

C. 40 percent

D. 67 percent

ANSWER: A.

TOPIC: 191003
KNOWLEDGE: K1.08 [2.1/2.6]
QID: P7408 (B7408)

Refer to the logic diagram for a valve controller (see figure below).

Which one of the following combinations of inputs will result in the valve receiving an OPEN signal?

	INPUTS			
	1	2	3	4
A.	Off	On	Off	Off
B.	Off	On	On	Off
C.	On	Off	Off	On
D.	On	Off	On	On

ANSWER: B.

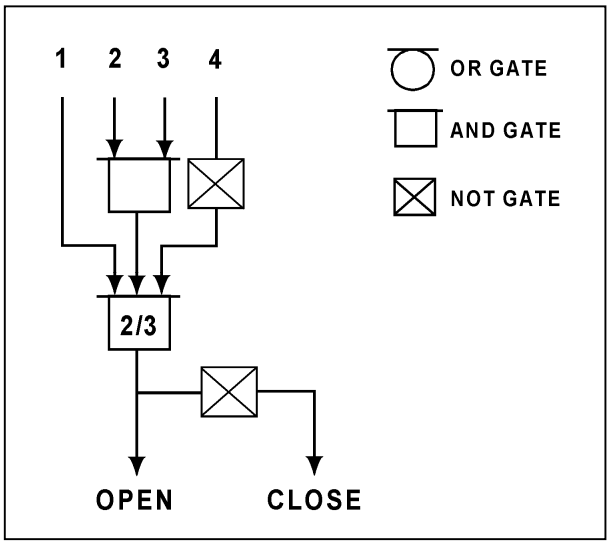

TOPIC: 191003
KNOWLEDGE: K1.08 [2.4/2.6]
QID: P7603 (B7603)

The water level in a tank is being controlled by an automatic level controller using proportional-only control as shown in the figure below. Initially the tank level is stable at 50 percent, but then the flow into the tank increases and stabilizes at a higher flow rate.

As tank level increases, the controller positions the drain valve more open than necessary to stabilize the level. As tank level decreases, the controller positions the drain valve more closed than necessary to stabilize the level. This cycle is repeated continuously, never reaching a stable tank level or drain valve position.

The excessive valve cycling described above can be reduced if the controller's gain is _____ or if the controller's proportional band is _____.

A. increased; widened

B. increased; narrowed

C. decreased; widened

D. decreased; narrowed

ANSWER: C.

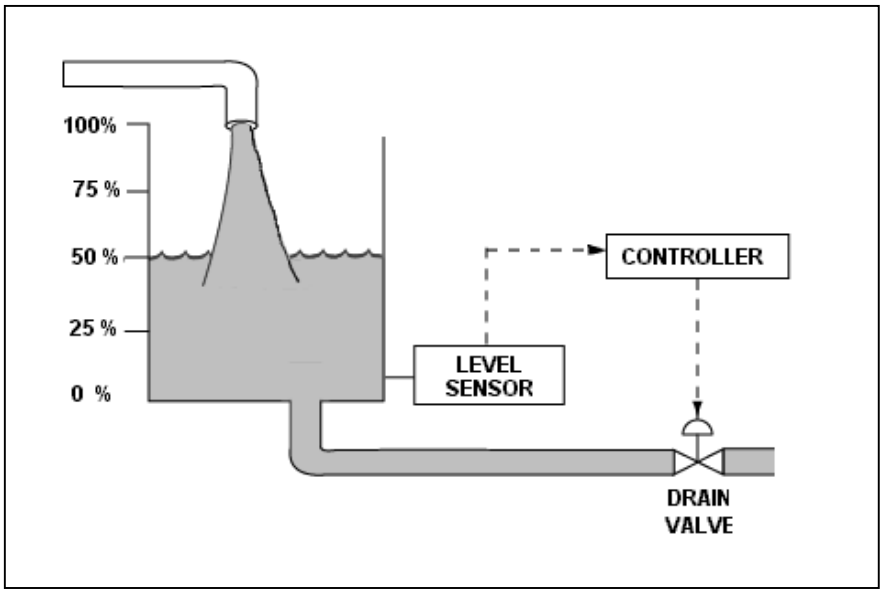

TOPIC: 191003
KNOWLEDGE: K1.08 [2.1/2.6]
QID: P7623 (B7622)

A proportional controller is being used to control the water level in a tank. When the tank water level matches the controller setpoint of 20 feet, the controller output is 50 percent.

Tank water level is currently stable at 25 feet with the controller output at 75 percent.

What is the tank water level proportional band for this controller?

A. 10 to 30 feet

B. 10 to 40 feet

C. 20 to 30 feet

D. 20 to 40 feet

ANSWER: A.

TOPIC: 191003
KNOWLEDGE: K1.08 [2.1/2.6]
QID: P7663 (B7663)

A proportional controller is being used to control the water level in a tank. Initially, the controller input and output signals are both stable at 50 percent of their full range. If the controller input signal increases to 60 percent, the controller output signal will increase to 90 percent.

What is the gain for this controller?

A. 0.25

B. 0.5

C. 2.0

D. 4.0

ANSWER: D.

TOPIC: 191003
KNOWLEDGE: K1.08 [2.1/2.6]
QID: P7673 (B7673)

Which one of the following is a characteristic that applies to a proportional-only controller, but not to a proportional-integral controller?

A. Gain

B. Offset

C. Rate component

D. Bistable component

ANSWER: B.

TOPIC: 191003
KNOWLEDGE: K1.08 [2.1/2.6]
QID: P7682 (B7682)

Refer to the logic diagram for a valve controller (see figure below).

Which one of the following combinations of flow rate (F), level (L), pressure (P), and temperature (T) inputs will result in the valve receiving a CLOSE signal? (The options below indicate whether the parameters are higher or lower than the associated bistable setpoints.)

INPUTS

	F	L	P	T
A.	Higher	Higher	Lower	Higher
B.	Lower	Lower	Higher	Lower
C.	Higher	Lower	Lower	Higher
D.	Lower	Higher	Higher	Lower

ANSWER: A.

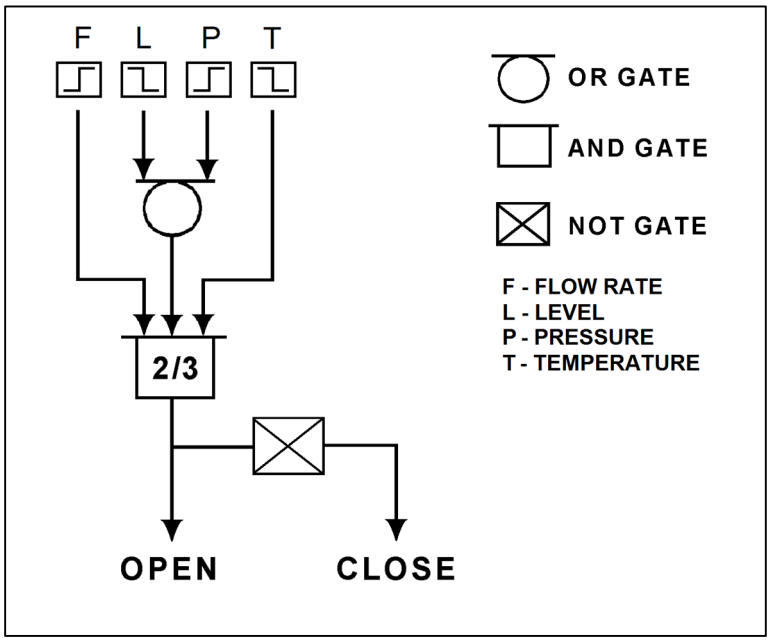

TOPIC: 191003
KNOWLEDGE: K1.09 [2.4/2.5]
QID: P818 (B1317)

The water level in a tank is being controlled by an automatic level controller and is initially at the controller setpoint. A drain valve is then opened, causing tank level to decrease. The decreasing level causes the controller to begin to open a makeup water supply valve. After a few minutes, a new steady-state tank level below the original level is established, with the supply rate equal to the drain rate.

The controller in this system uses _____ control.

A. proportional, integral, and derivative

B. proportional and integral only

C. proportional only

D. bistable

ANSWER: C.

TOPIC: 191003
KNOWLEDGE: K1.09 [2.4/2.5]
QID: P917 (B1015)

A proportional-derivative controller senses an increase in the controlled parameter above the controller setpoint. The derivative function causes the controller output signal to...

A. increase until the controlled parameter equals the controller setpoint, at which time the output signal becomes constant.

B. remain directly proportional to the difference between the controlled parameter and the controller setpoint.

C. increase until the controlled parameter equals the controller setpoint, at which time the output signal becomes zero.

D. change at a rate that is directly proportional to the rate of change of the controlled parameter.

ANSWER: D.

TOPIC: 191003
KNOWLEDGE: K1.09 [2.4/2.5]
QID: P918 (B2115)

In a proportional controller, the term "offset" refers to the difference between the...

A. control point and setpoint.

B. control point and proportional band.

C. deadband and setpoint.

D. deadband and proportional band.

ANSWER: A.

TOPIC: 191003
KNOWLEDGE: K1.09 [2.4/2.5]
QID: P1016 (B1915)

The level in a tank is controlled by an automatic control system. Level is initially at its setpoint. A drain valve is then opened, causing tank level to begin to decrease. The decreasing level causes the controller to begin to open a makeup supply valve. After a few minutes, with the drain valve still open, level is again constant at the setpoint.

The controller in this system uses primarily _____ control.

A. integral

B. on-off

C. derivative

D. proportional

ANSWER: A.

TOPIC: 191003
KNOWLEDGE: K1.09 [2.4/2.5]
QID: P1219 (B1516)

The level in a tank is controlled by an automatic level controller. Level is initially at 50 percent when the tank develops a leak. When level decreases to 45 percent the level controller opens a makeup supply valve. After a few minutes, level is 55 percent and the makeup valve closes. With the leak still in progress, level continuously oscillates between 45 percent and 55 percent as the makeup valve opens and closes.

The controller in this system uses primarily _____ control.

A. bistable

B. proportional

C. integral

D. derivative

ANSWER: A.

TOPIC: 191003
KNOWLEDGE: K1.09 [2.4/2.5]
QID: P1417 (B2215)

Which one of the following controller types is designed to control the measured parameter at the controller setpoint?

A. Integral

B. Proportional

C. On-Off

D. Derivative

ANSWER: A.

TOPIC: 191003
KNOWLEDGE: K1.09 [2.4/2.5]
QID: P2319 (B2315)

The level in a drain collection tank is being controlled by an automatic level controller and is initially stable at the controller setpoint. Flow rate into the tank increases, causing tank level to increase. The increasing level causes the controller to throttle open a tank drain valve. After a few minutes, a new stable tank level above the original level is established, with the drain flow rate equal to the supply flow rate.

The controller in this system uses _____ control.

A. on-off

B. proportional

C. proportional plus integral

D. proportional plus integral plus derivative

ANSWER: B.

TOPIC: 191003
KNOWLEDGE: K1.09 [2.4/2.5]
QID: P2419 (B2415)

The level in a drain collection tank is being controlled by an automatic level controller and level is initially at the controller setpoint. Flow rate into the tank causes tank level to increase. The increasing level causes the controller to fully open a tank drain valve. When level decreases below the setpoint, the controller closes the drain valve. Tank level continues to be controlled in this manner within a narrow band above and below the setpoint.

The controller in this system uses _____ control.

A. on-off

B. proportional

C. proportional plus integral

D. proportional plus integral plus derivative

ANSWER: A.

TOPIC: 191003
KNOWLEDGE: K1.09 [2.4/2.5]
QID: P2519 (B2515)

The temperature of the water in a small outside storage tank is controlled by a set of heaters submerged in the tank. The heaters energize at a water temperature of 40°F and deenergize at 48°F. When energized, the heaters produce a constant thermal output.

Which one of the following types of control devices is used in the heater control circuit to produce these characteristics?

A. Bistable

B. Proportional

C. Proportional plus integral

D. Proportional plus derivative

ANSWER: A.

TOPIC: 191003
KNOWLEDGE: K1.09 [2.4/2.5]
QID: P2819 (B2815)

The level in a water collection tank is being controlled by an automatic level controller that positions a tank drain valve. Tank level is initially stable at the controller setpoint. Then, flow rate into the tank increases, slowly at first, and then faster until a stable flow rate is attained.

When tank level increases, the controller begins to open the tank drain valve farther. The level controller output signal increases both as the tank level increases and as the rate of the tank level change quickens. After a few minutes, a new stable tank level above the original level is established, with the drain flow rate equal to the supply flow rate.

The controller in this system uses _____ control.

A. proportional only

B. proportional plus integral

C. proportional plus derivative

D. proportional plus integral plus derivative

ANSWER: C.

TOPIC: 191003
KNOWLEDGE: K1.09 [2.4/2.5]
QID: P2919 (B3116)

The level in a drain collection tank is being controlled by an automatic level controller, and is initially stable at the controller setpoint. Flow rate into the tank increases, slowly at first, and then faster until a stable higher flow rate is attained.

As tank level begins to increase, the level controller slowly opens a tank drain valve. The level controller output signal increases both as the tank level increases and as the rate of tank level change quickens. After a few minutes, tank level returns to, and remains at, the original level with the drain flow rate equal to the supply flow rate.

The controller in this system uses _____ control.

A. proportional only

B. proportional plus derivative only

C. proportional plus integral only

D. proportional plus integral plus derivative

ANSWER: D.

TOPIC: 191003
KNOWLEDGE: K1.09 [2.4/2.5]
QID: P3319 (B3316)

Refer to the drawing of a water storage tank with a level control system (see figure below). The tank water level is being automatically controlled at 50 percent by a proportional-integral (PI) controller that positions the drain valve. Tank water level is currently stable with 500 gpm entering the tank and the drain valve is 50 percent open.

Tank inlet flow rate suddenly increases to 700 gpm and remains constant. When tank water level stabilizes, level will be _____; and the drain valve position will be _____.

A. higher than 50 percent; more open

B. higher than 50 percent; the same

C. 50 percent; more open

D. 50 percent; the same

ANSWER: C.

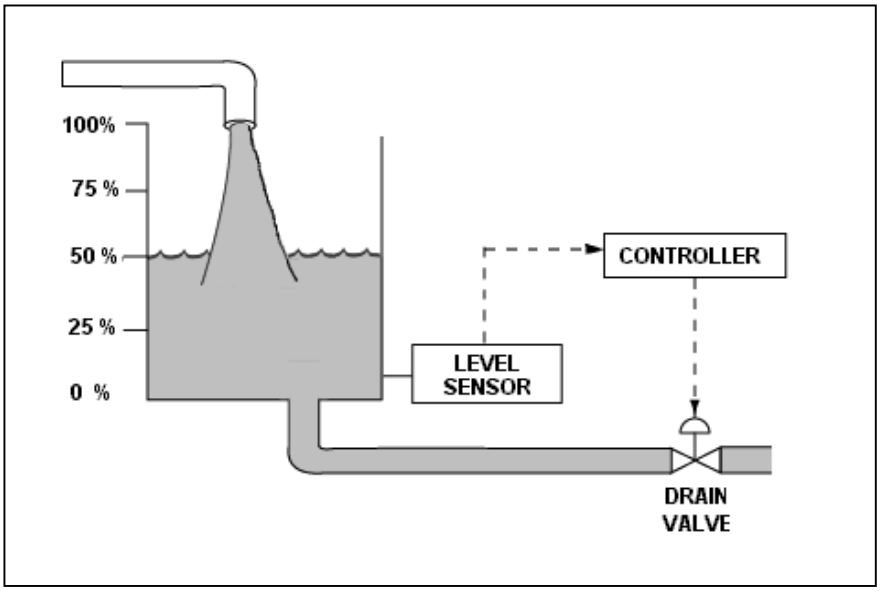

TOPIC: 191003
KNOWLEDGE: K1.09 [2.4/2.5]
QID: P3419 (B3415)

Refer to the drawing of a water storage tank with a level control system (see figure below). The tank water level is being automatically controlled at 50 percent by a proportional-integral (PI) controller that positions the drain valve. Tank water level is currently stable with 500 gpm entering the tank and the drain valve is 50 percent open.

The tank suddenly develops a constant 200 gpm leak, while the input flow rate remains constant at 500 gpm. When tank water level stabilizes, level will be _____; and the drain valve position will be _____.

A. 50 percent; more open

B. 50 percent; more closed

C. lower than 50 percent; more open

D. lower than 50 percent; more closed

ANSWER: B.

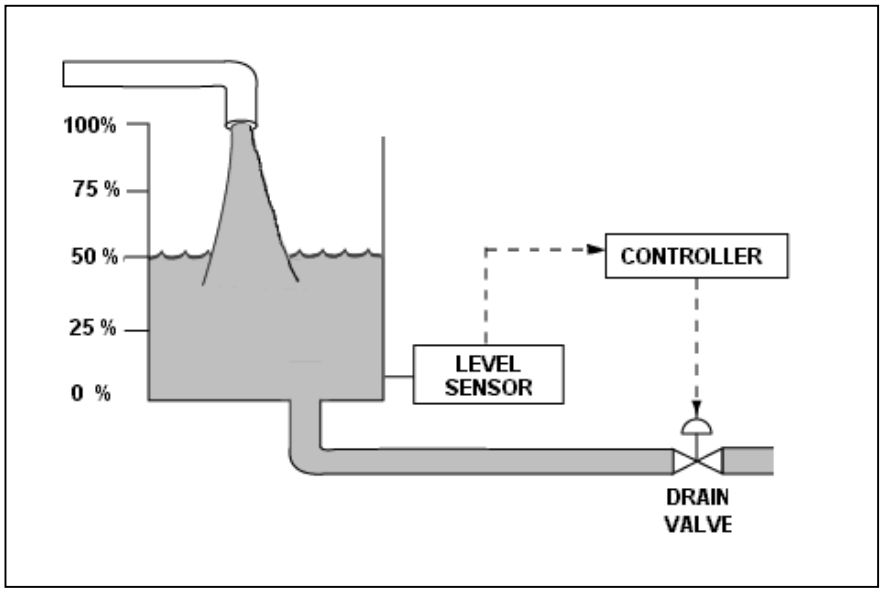

TOPIC: 191003
KNOWLEDGE: K1.09 [2.4/2.5]
QID: P3519 (B3515)

Refer to the drawing of a water storage tank with a level control system (see figure below).

The tank water level is being automatically controlled by a proportional-only controller with a setpoint of 50 percent. Tank water level is currently stable at 50 percent with 500 gpm entering the tank and the drain valve is 50 percent open.

The tank suddenly develops a 200 gpm leak, while the input flow rate remains constant at 500 gpm. After the tank water level stabilizes, level will be _____; and the drain valve position will be _____.

A. 50 percent; more than 50 percent open

B. 50 percent; less than 50 percent open

C. below 50 percent; more than 50 percent open

D. below 50 percent; less than 50 percent open

ANSWER: D.

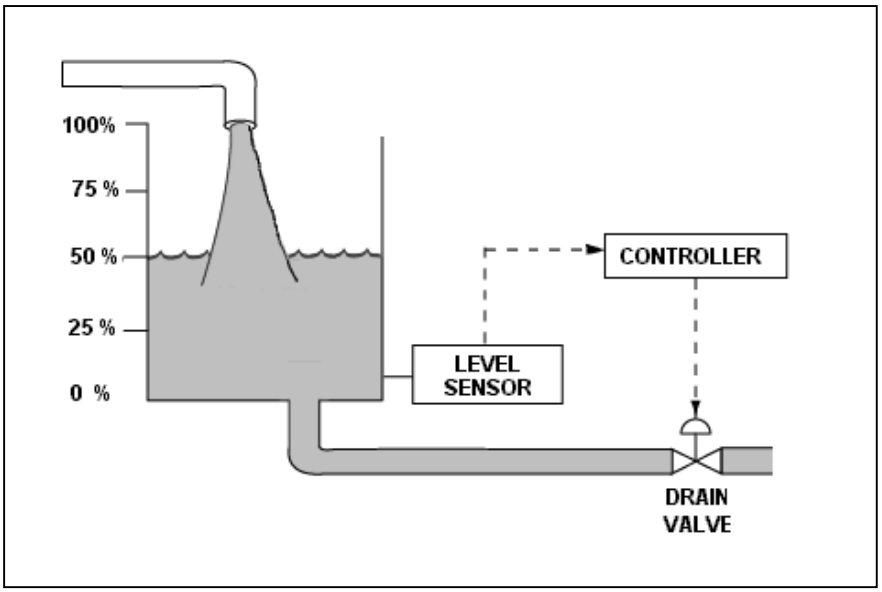

TOPIC: 191003
KNOWLEDGE: K1.09 [2.4/2.5]
QID: P3818 (B3816)

Refer to the drawing of a water storage tank with a level control system (see figure below).

The tank water level is being automatically controlled by a proportional-only controller with a level setpoint of 50 percent. Tank water level is currently stable at 50 percent with 500 gpm entering the tank and the drain valve is 50 percent open.

The tank input flow rate suddenly increases to 700 gpm. After the tank water level stabilizes, level will be _____; and the drain valve position will be _____.

A. 50 percent; more than 50 percent open

B. 50 percent; 50 percent open

C. above 50 percent; more than 50 percent open

D. above 50 percent; 50 percent open

ANSWER: C.

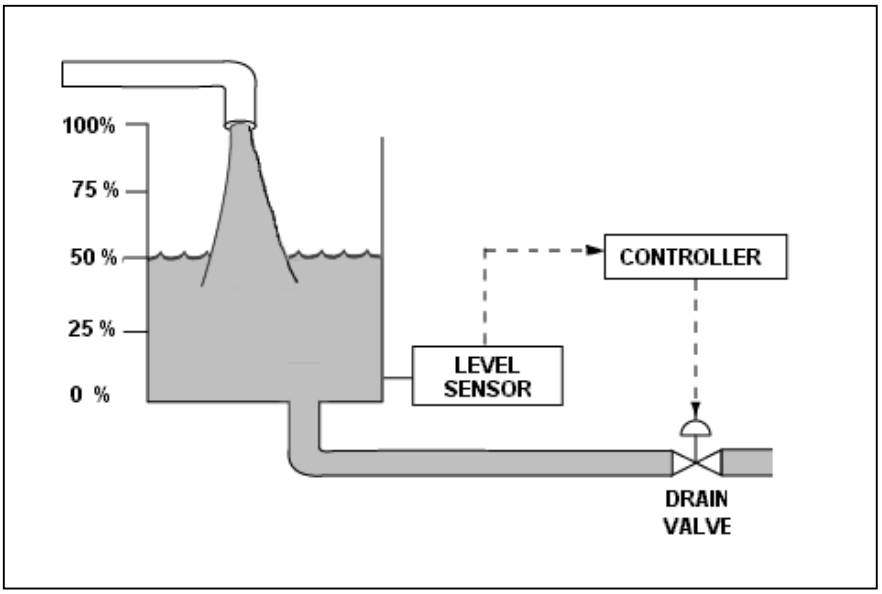

TOPIC: 191003
KNOWLEDGE: K1.09 [2.4/2.5]
QID: P4008

A system pressure controller has the following features:

- The controller output signal is 50 percent when the differential pressure (ΔP) between the pressure setpoint and the actual system pressure is zero.
- The controller output signal increases linearly with the ΔP.
- The controller output signal is <u>not</u> affected by the rate of change of the ΔP.
- The controller output signal is <u>not</u> affected by the length of time the ΔP exists.

Which one of the following lists the type(s) of control used by the controller described above?

A. Bistable only

B. Proportional only

C. Proportional plus integral

D. Proportional plus derivative

ANSWER: B.

TOPIC: 191003
KNOWLEDGE: K1.09 [2.4/2.5]
QID: P6209 (B6208)

An outside water storage tank is equipped with submerged heaters. The heaters energize at minimum power when water temperature decreases to 48°F. If water temperature continues to decrease, heater power will increase directly with the temperature deviation from 48°F until maximum power is reached at 40°F. If water temperature decreases faster than 1°F/min, the heaters will reach maximum power at a higher water temperature.

Which one of the following types of control is used in the heater control circuit to produce these characteristics?

A. Proportional only

B. Proportional plus integral

C. Proportional plus derivative

D. Proportional plus integral plus derivative

ANSWER: C.

TOPIC: 191003
KNOWLEDGE: K1.09 [2.4/2.5]
QID: P7509 (B7508)

Refer to the drawing of a flow control valve (see figure below) that is located in the makeup water supply line to a water storage tank.

The flow control valve is positioned by a tank level controller that can maintain a stable water level anywhere between 10 percent above and 10 percent below the controller setpoint.

Which one of the following describes the characteristics of the tank level controller?

A. Direct acting with proportional only control.

B. Direct acting with proportional plus integral control.

C. Reverse acting with proportional only control.

D. Reverse acting with proportional plus integral control.

ANSWER: C.

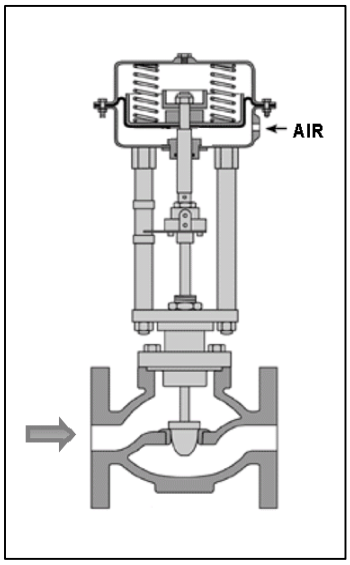

TOPIC: 191003
KNOWLEDGE: K1.09 [2.4/2.5]
QID: P7703 (B7702)

An outside water storage tank is equipped with submerged heaters. The heaters energize at minimum power when water temperature decreases to 48°F. If water temperature continues to decrease, heater power will increase directly with the temperature deviation from 48°F until maximum power is reached at 40°F. On cold days, the tank water temperature is usually maintained at about 44°F with the heaters energized at half power.

Which one of the following types of control is used in the heater control circuit to produce these characteristics?

A. Proportional only

B. Proportional plus integral only

C. Proportional plus derivative only

D. Proportional plus integral plus derivative

ANSWER: A.

TOPIC: 191003
KNOWLEDGE: K1.10 [2.4/2.8]
QID: P5809 (B5808)

A reverse-acting proportional controller will be used to maintain level in a water storage tank by positioning an air-operated makeup water flow control valve.

Which pair of flow control valves shown below will be compatible with the controller in the above application?

A. A and B

B. B and C

C. C and D

D. D and A

ANSWER: B.

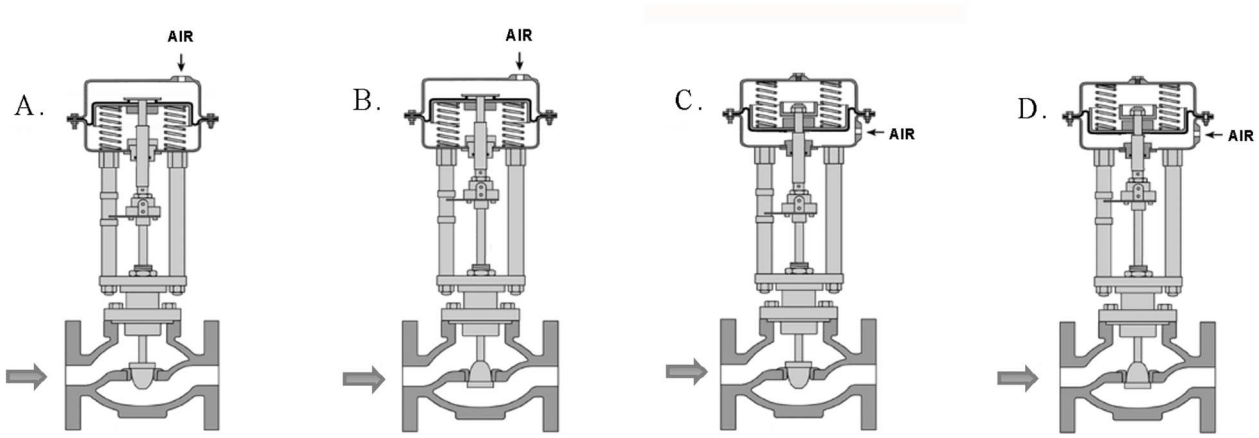

TOPIC: 191003
KNOWLEDGE: K1.10 [2.4/2.8]
QID: P6309 (B6309)

Given:

- A direct-acting proportional pneumatic controller will be used to maintain level in a condensate collection tank by positioning an air-operated flow control valve in the tank's drain line.
- The controller's input will vary directly with tank condensate level.

Which pair of flow control valves shown below will be compatible with the controller in the above application?

A. A and B

B. B and C

C. C and D

D. D and A

ANSWER: B.

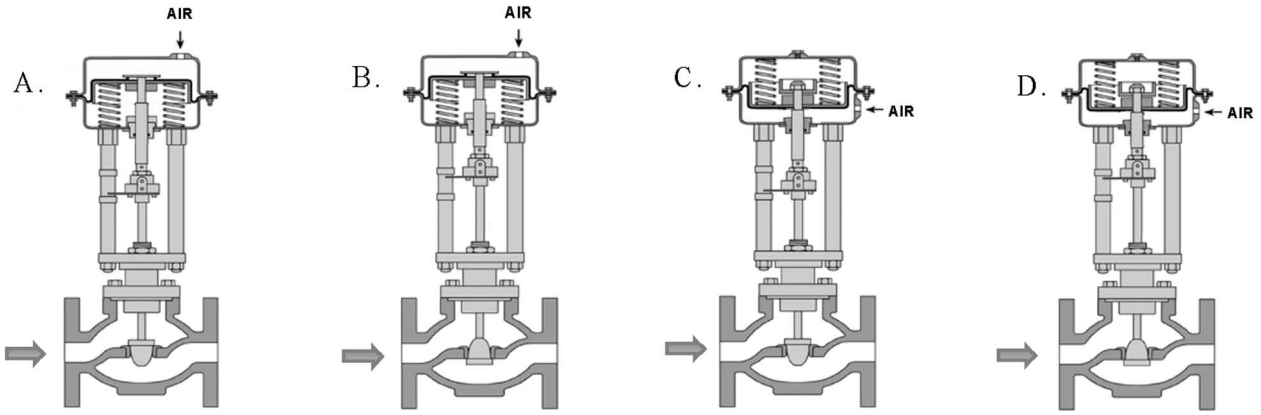

TOPIC: 191003
KNOWLEDGE: K1.10 [2.4/2.8]
QID: P7109 (B7108)

Given:

- A direct-acting proportional pneumatic controller will be used to maintain level in a water storage tank by positioning an air-operated flow control valve in the tank's makeup water supply line.
- The controller's input will vary directly with tank level.

Which pair of flow control valves shown below will be compatible with the controller in the above application?

A. A and B

B. B and C

C. C and D

D. D and A

ANSWER: D.

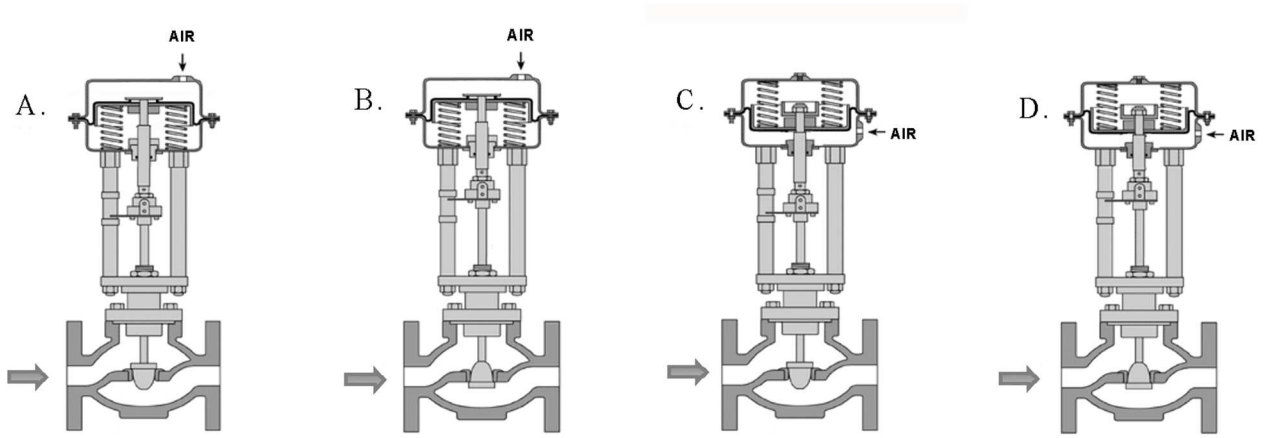

TOPIC: 191003
KNOWLEDGE: K1.10 [2.4/2.8]
QID: P7693 (B7692)

Given:

A reverse-acting proportional pneumatic controller will be used to maintain level in a water storage tank by positioning an air-operated flow control valve in the tank's drain line. The controller's input will vary directly with tank level.

Which pair of flow control valves shown below will be compatible with the controller in the above application?

A. A and B

B. B and C

C. C and D

D. D and A

ANSWER: D.

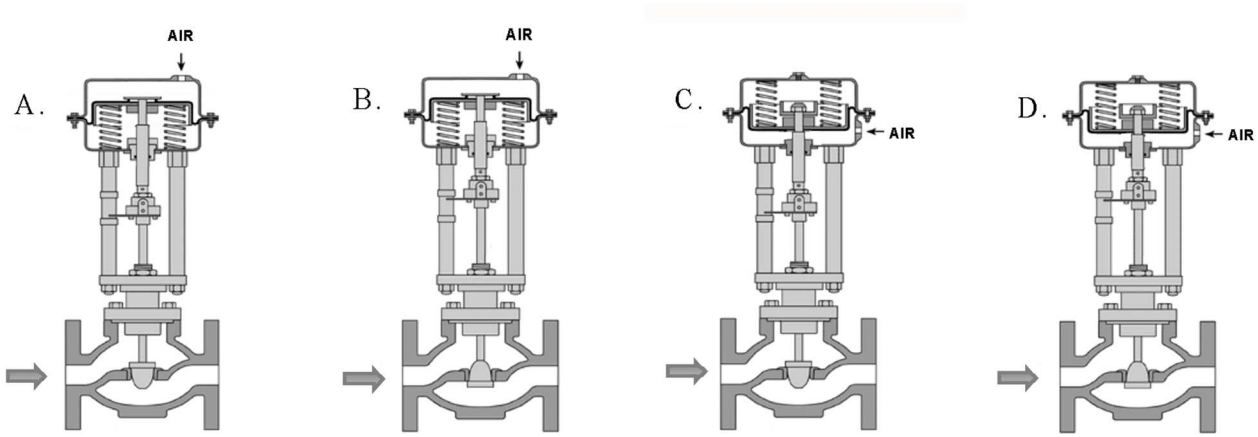

TOPIC: 191003
KNOWLEDGE: K1.11 [2.8/2.9]
QID: P20

What precaution must be observed before transferring a valve controller from the automatic mode to the manual mode of control?

A. Ensure that a substantial steady-state deviation is established between the automatic and manual valve controller outputs.

B. Ensure that the automatic and manual valve controller outputs are matched.

C. Ensure that the automatic valve controller output is increasing before transferring to the manual mode of control.

D. Ensure that the automatic valve controller output is decreasing before transferring to the manual mode of control.

ANSWER: B.

TOPIC: 191003
KNOWLEDGE: K1.11 [2.8/2.9]
QID: P220 (B1502)

Prior to shifting a valve controller from automatic to manual control, why should the automatic and manual controller output signals be matched?

A. To ensure the valve will operate in manual control upon demand.

B. To ensure valve position indication is accurate in manual control.

C. To move the valve to the new position prior to the transfer.

D. To prevent a sudden valve repositioning during the transfer.

ANSWER: D.

TOPIC: 191004
KNOWLEDGE: K1.01 [3.3/3.5]
QID: P21

Which one of the following contains indications of cavitation in an operating centrifugal pump?

A. Low flow rate with low discharge pressure.

B. Low flow rate with high discharge pressure.

C. High motor amps with low discharge pressure.

D. High motor amps with high discharge pressure.

ANSWER: A.

TOPIC: 191004
KNOWLEDGE: K1.01 [3.3/3.5]
QID: P221 (B218)

A centrifugal pump is initially operating at maximum rated flow rate in an open system. Which one of the following moderate changes will cause the pump to operate in closer proximity to cavitation?

A. Increase pump inlet temperature.

B. Decrease pump speed.

C. Increase pump suction pressure.

D. Decrease pump recirculation flow rate.

ANSWER: A.

TOPIC: 191004
KNOWLEDGE: K1.01 [3.3/3.5]
QID: P421

Pump cavitation occurs when vapor bubbles are formed at the eye of a pump impeller...

A. when the localized flow velocity exceeds sonic velocity for the existing fluid temperature.

B. when the localized pressure exceeds the vapor pressure for the existing fluid temperature.

C. and enter a high pressure region of the pump where they collapse, causing damaging pressure pulsations.

D. and are discharged from the pump where they collapse in downstream piping, causing damaging pressure pulsations.

ANSWER: C.

TOPIC: 191004
KNOWLEDGE: K1.01 [3.3/3.5]
QID: P524

Which one of the following contains symptoms associated with cavitation in an operating centrifugal pump?

A. Decreased motor current and pump speed.

B. Decreased pump and motor temperature.

C. Steadily increasing discharge pressure.

D. Increased noise and vibration.

ANSWER: D.

TOPIC: 191004
KNOWLEDGE: K1.01 [3.3/3.5]
QID: P1021

Which one of the following will promptly result in cavitation of a centrifugal pump that is initially operating at rated flow?

A. Recirculation flow path is aligned.

B. Recirculation flow path is isolated.

C. Pump suction valve is fully closed.

D. Pump discharge valve is fully closed.

ANSWER: C.

TOPIC: 191004
KNOWLEDGE: K1.01 [3.3/3.5]
QID: P1220 (B1218)

Which one of the following describes pump cavitation?

A. Vapor bubbles are formed when the enthalpy difference between pump discharge and pump suction exceeds the latent heat of vaporization.

B. Vapor bubbles are formed in the eye of the pump impeller and collapse as they enter higher pressure regions of the pump.

C. Vapor bubbles are produced when the localized pressure exceeds the vapor pressure at the existing temperature.

D. Vapor bubbles are discharged from the pump where they collapse on downstream piping and cause localized water hammers.

ANSWER: B.

TOPIC: 191004
KNOWLEDGE: K1.01 [3.3/3.5]
QID: P1321

Which one of the following is an indication of pump cavitation?

A. Pump motor amps are pegged high.

B. Pump discharge pressure indicates zero.

C. Pump motor amps are fluctuating.

D. Pump discharge pressure indicates shutoff head.

ANSWER: C.

TOPIC: 191004
KNOWLEDGE: K1.01 [3.3/3.5]
QID: P1520 (B1018)

If a centrifugal pump is started with the discharge valve fully open versus throttled, the possibility of pump runout will _____; and the possibility of pump cavitation will _____.

A. increase; decrease

B. increase; increase

C. decrease; decrease

D. decrease; increase

ANSWER: B.

TOPIC: 191004
KNOWLEDGE: K1.01 [3.3/3.5]
QID: P1820 (B1718)

If a centrifugal pump is started with the discharge valve throttled versus fully open, the possibility of pump runout will _____; and the possibility of pump cavitation will _____.

A. increase; decrease

B. increase; increase

C. decrease; decrease

D. decrease; increase

ANSWER: C.

TOPIC: 191004
KNOWLEDGE: K1.02 [3.1/3.4]
QID: P106

After a motor-driven centrifugal pump is started, the following indications are observed:

Oscillating flow rate
Oscillating discharge pressure
Oscillating motor amps

These indications are symptoms that the pump is experiencing...

A. excessive thrust.

B. cavitation.

C. runout.

D. wear ring failure.

ANSWER: B.

TOPIC: 191004
KNOWLEDGE: K1.02 [3.1/3.4]
QID: P222

The presence of air in a pump casing may result in _____ when the pump is started.

A. vortexing

B. pump runout

C. pump overspeed

D. gas binding

ANSWER: D.

TOPIC: 191004
KNOWLEDGE: K1.02 [3.1/3.4]
QID: P920

Which one of the following contains three indications of a vapor-bound motor-operated centrifugal pump that is operating in a cooling water system?

A. Fluctuating pump discharge pressure, reduced system flow rate, and increased pump motor current.

B. Reduced system flow rate, increased pump motor current, and increased pump noise level.

C. Increased pump motor current, increased pump noise level, and fluctuating pump discharge pressure.

D. Increased pump noise level, fluctuating pump discharge pressure, and reduced system flow rate.

ANSWER: D.

TOPIC: 191004
KNOWLEDGE: K1.03 [3.1/3.3]
QID: P1927 (B1821)

Which one of the following is an effective method for ensuring that a centrifugal pump remains primed and does not become gas bound during pump operation and after pump shutdown?

A. Install the pump below the level of the suction supply.

B. Install a check valve in the discharge piping of the pump.

C. Install an orifice plate in the discharge piping of the pump.

D. Install a pump recirculation line from the pump discharge piping to the pump suction piping.

ANSWER: A.

TOPIC: 191004
KNOWLEDGE: K1.04 [3.3/3.4]
QID: P23 (B423)

Operating a motor-driven centrifugal pump for an extended period of time under no flow conditions will cause...

A. pump failure from overspeed.

B. pump failure from overheating.

C. motor failure from overspeed.

D. motor failure from overheating.

ANSWER: B.

TOPIC: 191004
KNOWLEDGE: K1.04 [3.3/3.4]
QID: P109 (B1823)

When a centrifugal pump is operating at shutoff head, it is pumping at _____ capacity and _____ discharge head.

A. maximum; maximum

B. maximum; minimum

C. minimum; maximum

D. minimum; minimum

ANSWER: C.

TOPIC: 191004
KNOWLEDGE: K1.04 [3.3/3.4]
QID: P119 (B1319)

Refer to the drawing of centrifugal pump and system operating curves (see figure below).

Which point represents pump operation at shutoff head?

A. Point A

B. Point B

C. Point C

D. Point D

ANSWER: A.

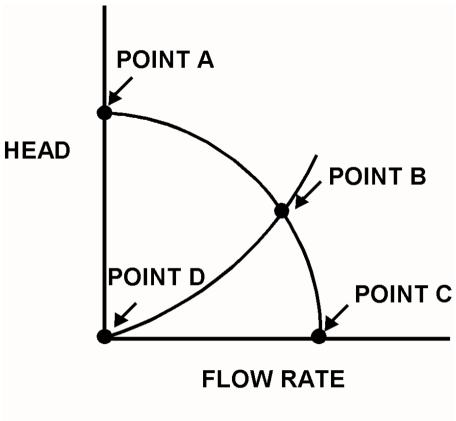

TOPIC: 191004
KNOWLEDGE: K1.04 [3.3/3.4]
QID: P223

Operating a centrifugal pump at shutoff head without recirculation flow can quickly result in...

A. discharge piping overpressure.

B. suction piping overpressure.

C. excessive pump leakoff.

D. pump overheating.

ANSWER: D.

TOPIC: 191004
KNOWLEDGE: K1.04 [3.3/3.4]
QID: P321 (B319)

A motor-driven centrifugal pump with no recirculation flow path must be stopped when discharge pressure reaches the pump shutoff head to prevent...

A. overheating of the pump.

B. overheating of the motor.

C. bursting of the pump casing.

D. water hammer in downstream lines.

ANSWER: A.

TOPIC: 191004
KNOWLEDGE: K1.04 [3.3/3.4]
QID: P1222 (B1181)

A nuclear power plant is operating at full power when a 200 gpm reactor coolant leak occurs, which results in a reactor scram and initiation of emergency coolant injection. Reactor vessel pressure stabilizes at 900 psia. All centrifugal injection pumps are operating with all pump miniflow paths isolated. The shutoff heads for the pumps are as follows:

High pressure coolant injection (HPCI) pumps = 1,200 psia
Low pressure coolant injection (LPCI) pumps = 200 psia

If the injection pumps continue operating under these conditions, which pumps are more likely to fail, and why?

A. LPCI pumps, due to pump overheating.

B. LPCI pumps, due to motor overheating.

C. HPCI pumps, due to pump overheating.

D. HPCI pumps, due to motor overheating.

ANSWER: A.

TOPIC: 191004
KNOWLEDGE: K1.04 [3.3/3.4]
QID: P1320 (B1917)

Refer to the drawing of a centrifugal pump with a recirculation line (see figure below).

The flowpath through valve A is designed to...

A. prevent pump runout by creating a recirculation flowpath.

B. provide a small flow rate through the pump during shutoff head conditions.

C. direct a small amount of water to the pump suction to raise available net positive suction head.

D. prevent the discharge piping from exceeding design pressure during no-flow conditions.

ANSWER: B.

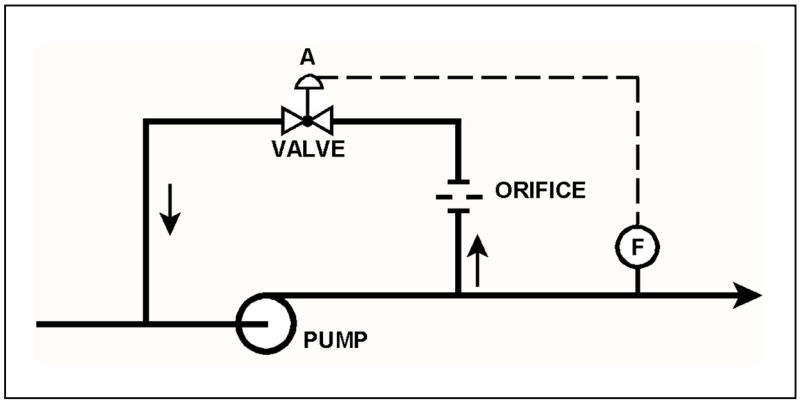

TOPIC: 191004
KNOWLEDGE: K1.04 [3.3/3.4]
QID: P1423

Which one of the following is at a relatively high value when a centrifugal pump is operating at shutoff head?

A. Pump motor current

B. Pump volumetric flow rate

C. Available net positive suction head

D. Required net positive suction head

ANSWER: C.

TOPIC: 191004
KNOWLEDGE: K1.04 [3.3/3.4]
QID: P1523

Which one of the following describes radial-flow centrifugal pump operating parameters at shutoff head?

A. High discharge pressure, low flow, low power demand

B. High discharge pressure, high flow, low power demand

C. Low discharge pressure, low flow, high power demand

D. Low discharge pressure, high flow, high power demand

ANSWER: A.

TOPIC: 191004
KNOWLEDGE: K1.04 [3.3/3.4]
QID: P1621

Which one of the following conditions applies to a centrifugal pump running at shutoff head?

A. The volumetric flow rate for the pump has been maximized.

B. Cavitation will occur immediately upon reaching shutoff head.

C. Available net positive suction head is at a maximum value for the existing fluid conditions.

D. Pump differential pressure is at a minimum value.

ANSWER: C.

TOPIC: 191004
KNOWLEDGE: K1.04 [3.3/3.4]
QID: P1922

Which one of the following would result from operating a motor-driven radial-flow centrifugal pump in a water system for an extended period with the discharge valve shut and no recirculation flow?

A. No motor damage, but the pump will overheat and may be damaged.

B. No motor damage, but the pump will overspeed and may be damaged.

C. No pump damage, but the motor will overspeed and the motor bearings may fail.

D. No pump damage, but the motor windings will draw excessive current and may fail.

ANSWER: A.

TOPIC: 191004
KNOWLEDGE: K1.04 [3.3/3.4]
QID: P2019 (B2017)

Refer to the drawing of a pump with recirculation line (see figure below).

Which one of the following describes the response of the pump if a complete flow blockage occurs in the discharge line just downstream of the flow transmitter?

A. The pump will overheat after a relatively short period of time, due to a loss of both main flow and recirculation flow.

B. The pump will overheat after a relatively long period of time, due to a loss of main flow only.

C. The pump will overheat after a relatively long period of time, due to a loss of recirculation flow only.

D. The pump will be able to operate under these conditions indefinitely, due to sustained main flow.

ANSWER: B.

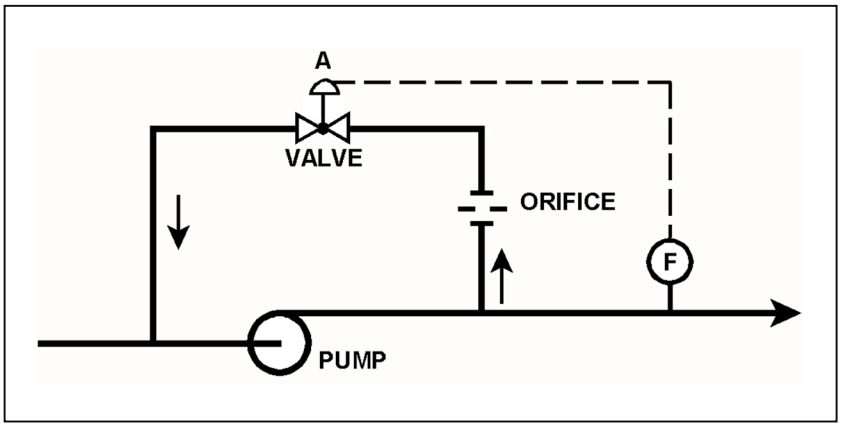

TOPIC: 191004
KNOWLEDGE: K1.04 [3.3/3.4]
QID: P2022 (B2018)

A variable-speed centrifugal fire water pump is taking a suction on an open storage tank and discharging through a 4-inch diameter fire hose and through a nozzle located 50 feet above the pump.

Which one of the following will cause the pump to operate at shutoff head?

A. The fire hose is replaced with a 6-inch diameter fire hose.

B. The fire hose is replaced with a 2-inch diameter fire hose.

C. Pump speed is increased until steam formation at the eye of the pump prevents pump flow.

D. Pump speed is decreased until pump discharge pressure is insufficient to cause flow.

ANSWER: D.

TOPIC: 191004
KNOWLEDGE: K1.04 [3.3/3.4]
QID: P2221 (B1219)

Refer to the drawing of a pump with a recirculation line (see figure below).

Valve A will open when pump...

A. discharge pressure increases above a setpoint.

B. discharge pressure decreases below a setpoint.

C. flow rate increases above a setpoint.

D. flow rate decreases below a setpoint.

ANSWER: D.

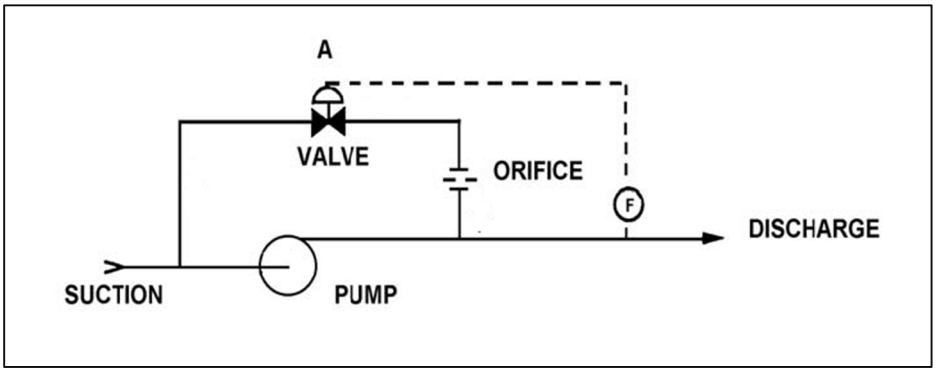

TOPIC: 191004
KNOWLEDGE: K1.04 [3.3/3.4]
QID: P2322 (B520)

A centrifugal fire water pump takes suction from an open storage tank and discharges through a fire hose. Which one of the following will cause the pump to operate at shutoff head?

A. The fire hose nozzle is raised to an elevation that prevents any flow.

B. Suction temperature is increased to the point that gas binding occurs.

C. Pump speed is adjusted to the value at which cavitation occurs.

D. Suction pressure is adjusted until available net positive suction head is reduced to zero feet.

ANSWER: A.

TOPIC: 191004
KNOWLEDGE: K1.04 [3.3/3.4]
QID: P2721 (B2721)

A centrifugal fire water pump takes suction from an open storage tank and discharges through a fire hose. Which one of the following will cause the pump to operate at shutoff head?

A. A firefighter inadvertently severs the fire hose.

B. The fire hose becomes completely crimped in a fire door.

C. Fire water storage tank level drops below the pump suction tap.

D. A firefighter adjusts the fire hose nozzle spray pattern from DELUGE to FOG.

ANSWER: B.

TOPIC: 191004
KNOWLEDGE: K1.04 [3.3/3.4]
QID: P2820 (B3320)

A centrifugal fire water pump takes suction from an open storage tank and discharges through a fire hose. Which one of the following will cause the pump to operate at shutoff head?

A. A firefighter inadvertently severs the fire hose.

B. The fire hose becomes partially crimped in a fire door.

C. Fire water storage tank level drops below the pump suction tap.

D. A firefighter adjusts the fire hose nozzle spray pattern from DELUGE to OFF.

ANSWER: D.

TOPIC: 191004
KNOWLEDGE: K1.04 [3.3/3.4]
QID: P3122 (B2225)

Refer to the drawing of a pump with a recirculation line (see figure below).

Valve A will close when pump...

A. discharge pressure increases above a setpoint.

B. discharge pressure decreases below a setpoint.

C. flow rate increases above a setpoint.

D. flow rate decreases below a setpoint.

ANSWER: C.

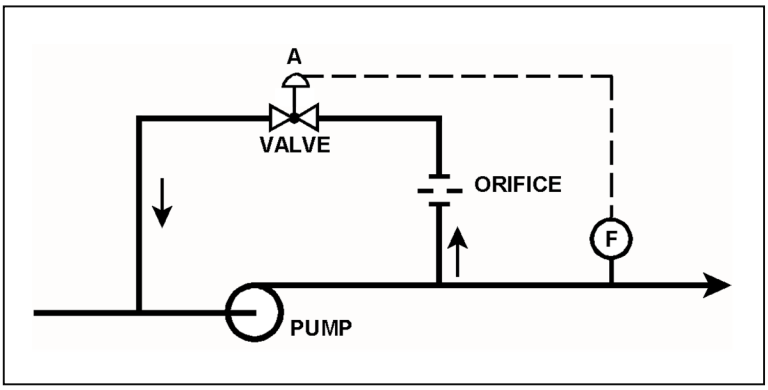

TOPIC: 191004
KNOWLEDGE: K1.04 [3.3/3.4]
QID: P6910 (B6910)

The discharge valve for a radial-flow centrifugal cooling water pump is closed in preparation for starting the pump.

After the pump is started, the following stable pump pressures are observed:

Pump discharge pressure = 30 psig
Pump suction pressure = 10 psig

With the discharge valve still closed, if the pump speed is doubled, what will be the new pump discharge pressure?

A. 80 psig

B. 90 psig

C. 120 psig

D. 130 psig

ANSWER: B.

TOPIC: 191004
KNOWLEDGE: K1.06 [3.2/3.3]
QID: P322 (B324)

The available net positive suction head for a pump may be expressed as...

A. discharge pressure minus saturation pressure of the fluid being pumped.

B. discharge pressure minus suction pressure.

C. suction pressure minus saturation pressure of the fluid being pumped.

D. suction pressure plus discharge pressure.

ANSWER: C.

TOPIC: 191004
KNOWLEDGE: K1.06 [3.2/3.3]
QID: P1120 (B121)

Which one of the following operations in a closed system will cause a decrease in available net positive suction head for a centrifugal pump?

A. Decreasing the inlet fluid temperature.

B. Increasing the pump discharge pressure.

C. Throttling open the pump suction valve.

D. Throttling open the pump discharge valve.

ANSWER: D.

TOPIC: 191004
KNOWLEDGE: K1.06 [3.2/3.3]
QID: P1221 (B1621)

Refer to the drawing of a cooling water system (see figure below).

The available net positive suction head for the centrifugal pump will be increased by...

A. opening surge tank makeup valve A to raise tank level.

B. throttling heat exchanger service water valve B more closed.

C. throttling pump discharge valve C more open.

D. throttling pump suction valve D more closed.

ANSWER: A.

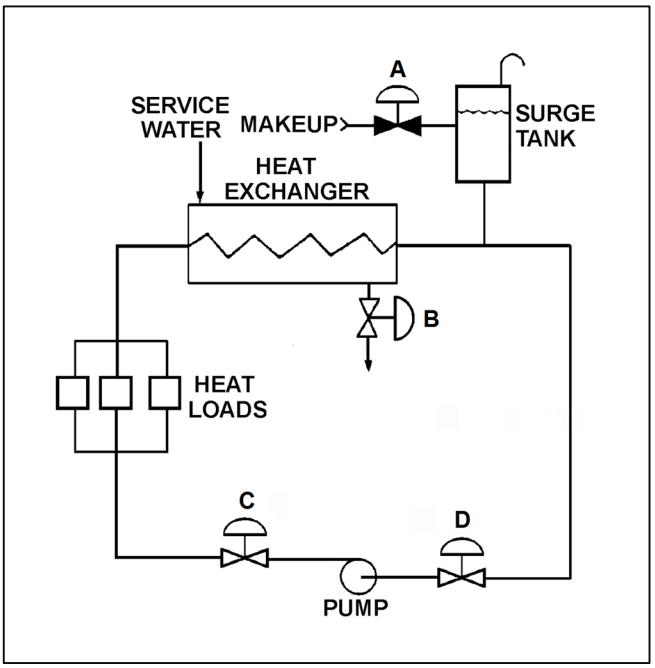

TOPIC: 191004
KNOWLEDGE: K1.06 [3.2/3.3]
QID: P1521 (B1918)

Refer to the drawing of a cooling water system (see figure below).

The available net positive suction head for the centrifugal pump will be decreased by...

A. opening surge tank makeup valve A to raise tank level.

B. throttling heat exchanger service water valve B more open.

C. throttling pump discharge valve C more open.

D. reducing the heat load on the cooling water system.

ANSWER: C.

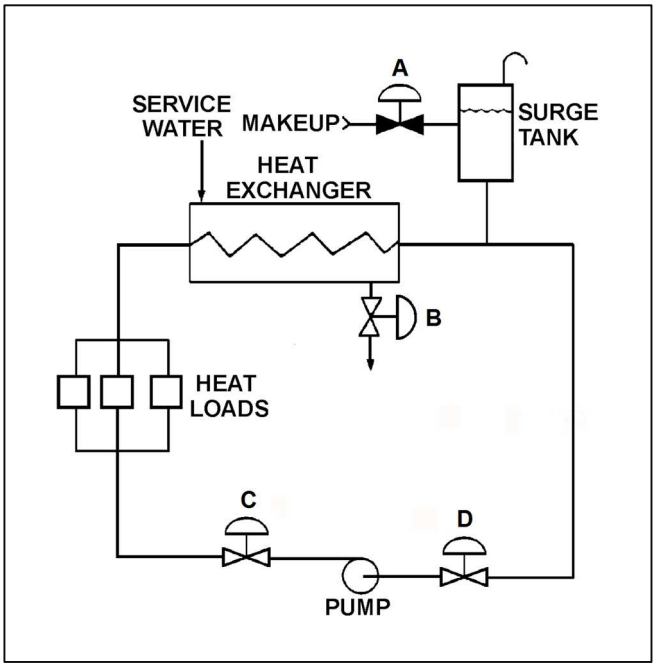

TOPIC: 191004
KNOWLEDGE: K1.06 [3.2/3.3]
QID: P1822 (B2119)

Refer to the drawing of an operating cooling water system (see figure below).

Which one of the following will increase available net positive suction head for the centrifugal pump?

A. Draining the surge tank to decrease level by 10 percent.

B. Positioning heat exchanger service water valve B more closed.

C. Positioning pump discharge valve C more closed.

D. Positioning pump suction valve D more closed.

ANSWER: C.

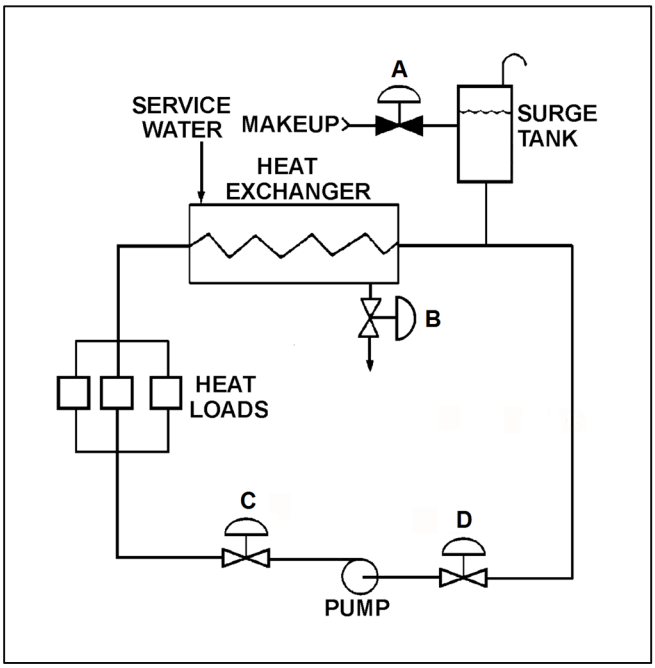

TOPIC: 191004
KNOWLEDGE: K1.06 [3.2/3.3]
QID: P2222 (B2518)

Refer to the drawing of a cooling water system (see figure below).

The available net positive suction head for the centrifugal pump will be decreased by...

A. increasing surge tank level by 5 percent.

B. throttling heat exchanger service water valve B more open.

C. throttling pump discharge valve C more closed.

D. increasing the heat loads on the cooling water system.

ANSWER: D.

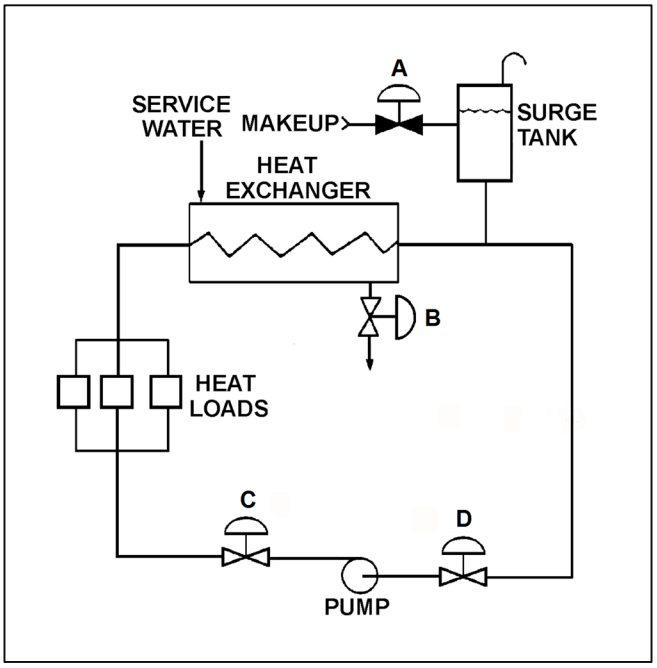

TOPIC: 191004
KNOWLEDGE: K1.06 [3.2/3.3]
QID: P2323 (B2319)

Refer to the drawing of an operating cooling water system (see figure below).

Which one of the following will decrease available net positive suction head for the centrifugal pump?

A. Adding water to the surge tank to raise level by 10 percent.

B. Positioning heat exchanger service water valve B more open.

C. Positioning pump discharge valve C more open.

D. Reducing heat loads on the cooling water system by 10 percent.

ANSWER: C.

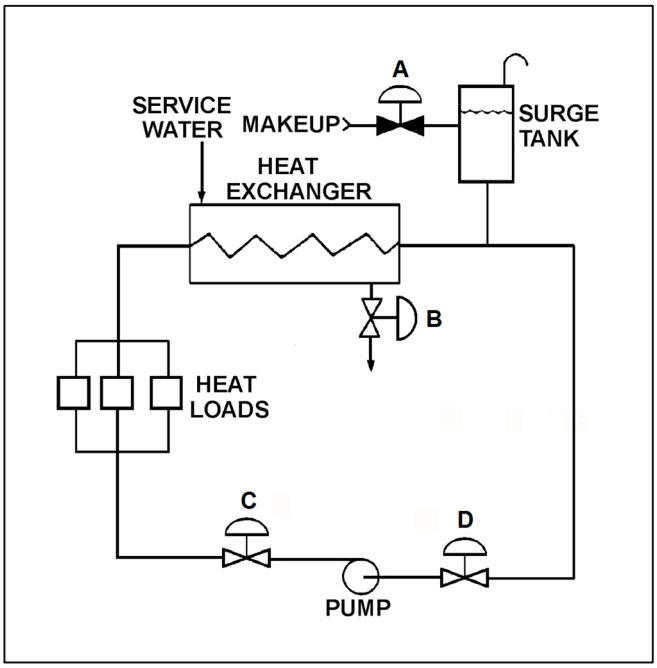

TOPIC: 191004
KNOWLEDGE: K1.06 [3.2/3.3]
QID: P2621 (B2621)

A cooling water pump is operating with pump suction parameters as follows:

Suction Temperature = 124°F
Suction Pressure = 11.7 psia

What is the approximate available net positive suction head (NPSH) for the pump? (Neglect the contribution of the suction fluid velocity to NPSH.)

A. 23 feet

B. 27 feet

C. 31 feet

D. 35 feet

ANSWER: A.

TOPIC: 191004
KNOWLEDGE: K1.06 [3.2/3.3]
QID: P2722 (B2722)

A centrifugal pump is operating at maximum design flow rate, taking suction on a vented water storage tank and discharging through two parallel valves. Valve A is fully open and valve B is half open.

Which one of the following will occur if valve B is fully closed?

A. The pump will operate at shutoff head.

B. The pump will operate at runout conditions.

C. The pump available net positive suction head will increase.

D. The pump required net positive suction head will increase.

ANSWER: C.

TOPIC: 191004
KNOWLEDGE: K1.06 [3.2/3.3]
QID: P2921 (B2920)

Refer to the drawing of an operating cooling water system (see figure below).

Which one of the following will increase the available net positive suction head for the centrifugal pump?

A. Draining the surge tank to decrease level by 10 percent.

B. Positioning the service water valve B more closed.

C. Positioning the pump discharge valve C more open.

D. Reducing the heat loads on the cooling water system.

ANSWER: D.

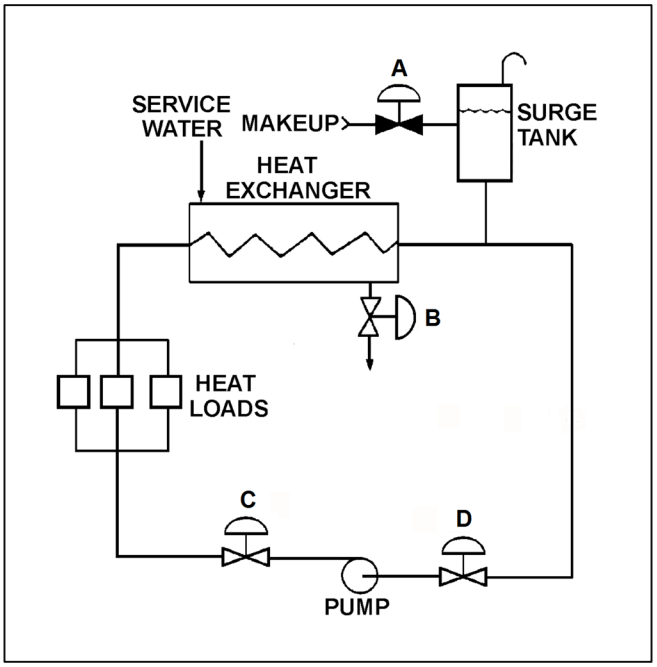

TOPIC: 191004
KNOWLEDGE: K1.06 [3.2/3.3]
QID: P3020 (B3022)

A centrifugal pump is needed to take suction on a water storage tank and deliver high pressure water to a water spray system. To minimize axial thrust on the pump shaft, the pump should have _____ stage(s); and to maximize the available NPSH at the impeller inlet, the pump should have a _____ suction impeller.

A. a single; single

B. a single; double

C. multiple opposed; single

D. multiple opposed; double

ANSWER: D.

TOPIC: 191004
KNOWLEDGE: K1.06 [3.2/3.3]
QID: P3221 (B3219)

A centrifugal pump is taking suction on an open storage tank that has been filled to a level of 40 feet with 10,000 gallons of 60°F water. The pump is located at the base of the tank, takes a suction from the bottom of the tank, and discharges to a lake.

Given:

- The pump is currently operating at its design flow rate of 200 gpm and a total developed head of 150 feet.
- The pump requires 4 feet of net positive suction head.

How will the centrifugal pump flow rate be affected as the water storage tank level decreases?

A. Flow rate will remain constant until the pump begins to cavitate at a tank level of about 4 feet.

B. Flow rate will remain constant until the pump becomes air bound when the tank empties.

C. Flow rate will gradually decrease until the pump begins to cavitate at a tank level of about 4 feet.

D. Flow rate will gradually decrease until the pump becomes air bound when the tank empties.

ANSWER: D.

TOPIC: 191004
KNOWLEDGE: K1.06 [3.2/3.3]
QID: P4010 (B4011)

Refer to the drawing below of a centrifugal pump taking suction from the bottom of an open storage tank containing water at 66°F. Pump and water level elevations are indicated in the figure. Assume standard atmospheric pressure.

Assuming that pump suction head loss is negligible, what is the approximate value of net positive suction head available to the pump.

A. 6 feet

B. 13 feet

C. 20 feet

D. 25 feet

ANSWER: C.

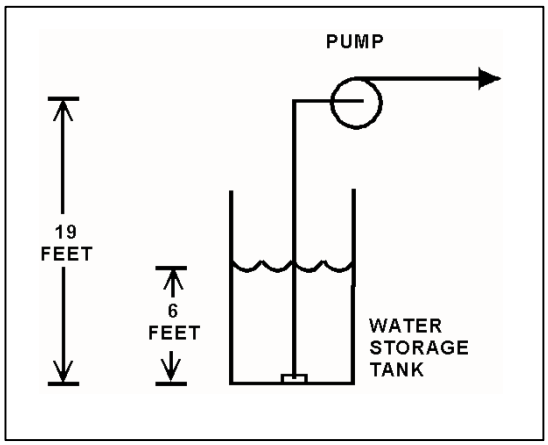

TOPIC: 191004
KNOWLEDGE: K1.06 [3.2/3.3]
QID: P4110 (B4113)

Refer to the drawing of an elevated centrifugal pump taking suction from the bottom of an open storage tank containing water at 66°F (see figure below). Assume standard atmospheric pressure.

The pump requires 4.0 feet of net positive suction head (NPSH). Assume that pump suction head loss is negligible.

If tank water level is allowed to decrease continuously, at what approximate water level will the pump begin to cavitate?

A. 34 feet

B. 29 feet

C. 21 feet

D. 16 feet

ANSWER: C.

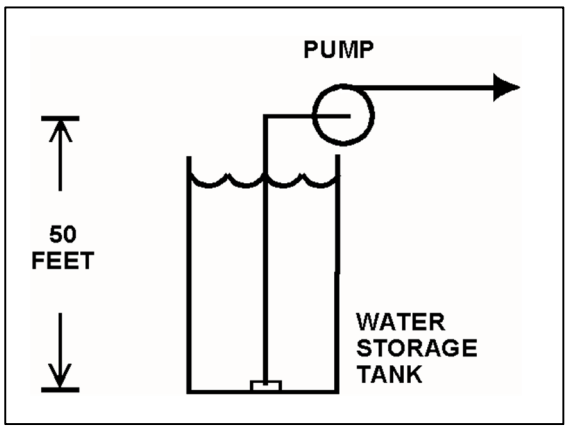

TOPIC: 191004
KNOWLEDGE: K1.06 [3.2/3.3]
QID: P4410 (B4410)

Refer to the drawing of a centrifugal pump taking suction from the bottom of an open storage tank containing water at 66°F (see figure below). Pump and water level elevations are indicated in the figure. Assume standard atmospheric pressure.

Assuming that pump suction head loss is negligible, what is the approximate value of net positive suction head available to the pump?

A. 6 feet

B. 12 feet

C. 39 feet

D. 45 feet

ANSWER: D.

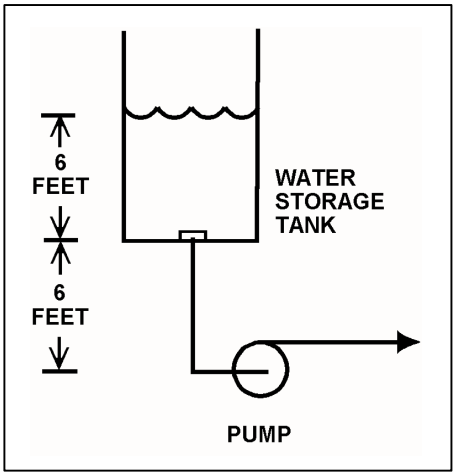

TOPIC: 191004
KNOWLEDGE: K1.06 [3.2/3.3]
QID: P5211 (B5210)

Consider a centrifugal pump that is taking suction from the bottom of an open water storage tank. (See figure below.)

Given:

- The tank contains 60°F water.
- The eye of the pump impeller is located 50 feet above the bottom of the tank.
- The pump requires a minimum net positive suction head of 4 feet.

Which one of the following describes the effect on pump operation if tank water level is allowed to continuously decrease?

A. The pump will operate normally until tank water level decreases below approximately 20 feet, at which time the pump will cavitate.

B. The pump will operate normally until tank water level decreases below approximately 16 feet, at which time the pump will cavitate.

C. The pump will operate normally until the pump suction becomes uncovered, at which time the pump will cavitate.

D. The pump will operate normally until the pump suction becomes uncovered, at which time the pump will become air bound.

ANSWER: A.

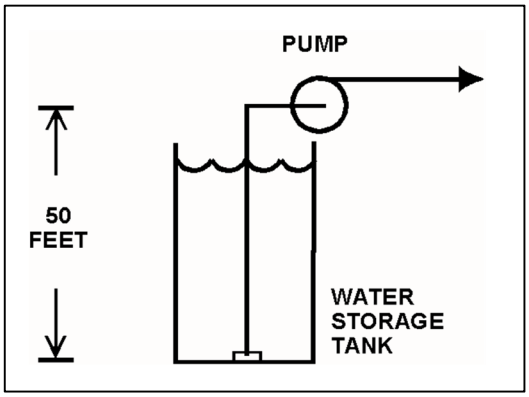

TOPIC: 191004
KNOWLEDGE: K1.06 [3.2/3.3]
QID: P5511 (B5510)

Refer to the drawing of a steam condenser, hotwell, and condensate pump (see figure below).

Given the following:

- The eye of the pump impeller is located 6.0 feet below the bottom of the hotwell.
- The pump requires 10.0 feet of net positive suction head (NPSH).
- Condenser pressure is 1.2 psia.
- Hotwell water temperature is 90°F.
- Pump suction head losses are zero.

What is the minimum hotwell water level necessary to provide the required NPSH?

A. 1.2 feet

B. 2.8 feet

C. 4.0 feet

D. 5.2 feet

ANSWER: B.

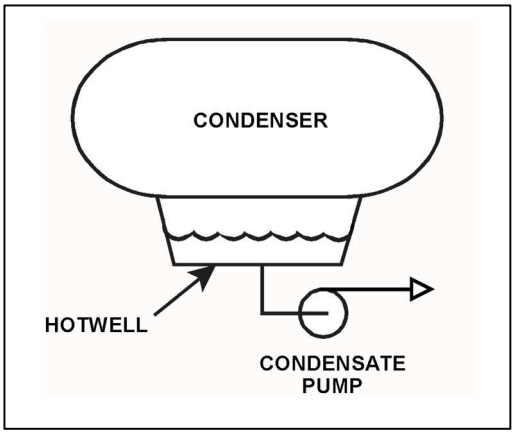

TOPIC: 191004
KNOWLEDGE: K1.06 [3.2/3.3]
QID: P5611 (B5610)

A centrifugal pump is taking suction on a water storage tank and delivering the makeup water to a cooling water system. The pump will have the lowest net positive suction head requirement if the pump is operated at a relatively _____ speed with a _____ discharge flow control valve.

A. high; fully open

B. high; throttled

C. low; fully open

D. low; throttled

ANSWER: D.

TOPIC: 191004
KNOWLEDGE: K1.06 [3.2/3.3]
QID: P5810 (B5810)

Refer to the drawing below of a centrifugal pump taking suction from the bottom of an open storage tank containing water at 75°F. Pump and water level elevations are indicated in the figure. Assume standard atmospheric pressure.

Assuming that pump suction head loss is negligible, what is the approximate value of net positive suction head available to the pump.

A. 5 feet

B. 10 feet

C. 17 feet

D. 23 feet

ANSWER: D.

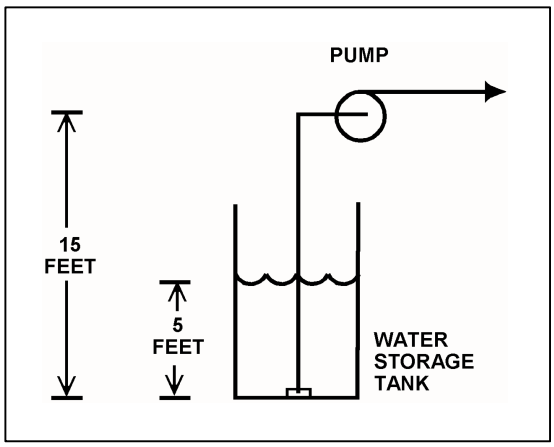

TOPIC: 191004
KNOWLEDGE: K1.06 [3.2/3.3]
QID: P5910 (B5911)

Refer to the drawing of a steam condenser, hotwell, and condensate pump (see figure below).

Given the following initial conditions:

- Condenser pressure is 1.2 psia.
- Condensate temperature is 96°F.
- Hotwell level is 10 feet above the condensate pump suction.

Which one of the following will provide the greatest increase in NPSH available to the condensate pump? (Assume that condenser pressure does not change.)

A. Hotwell level decreases by 6 inches.

B. Hotwell level increases by 6 inches.

C. Condensate temperature decreases by 6°F.

D. Condensate temperature increases by 6°F.

ANSWER: B.

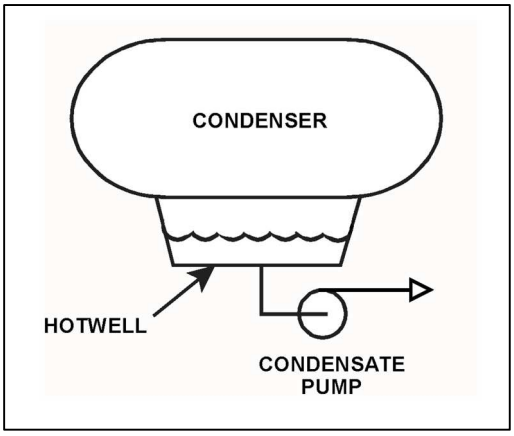

TOPIC: 191004
KNOWLEDGE: K1.06 [3.2/3.3]
QID: P6211 (B6211)

A centrifugal pump is taking suction on a water storage tank and discharging through a flow control valve. The pump will have the highest net positive suction head requirement if the pump is operated at a _____ speed with a _____ discharge flow control valve.

A. high; fully open

B. high; throttled

C. low; fully open

D. low; throttled

ANSWER: A.

TOPIC: 191004
KNOWLEDGE: K1.06 [3.2/3.3]
QID: P6410 (B6410)

An operating centrifugal pump has a net positive suction head (NPSH) requirement of 150 feet. Water at 300°F is entering the pump. Which one of the following is the lowest listed pump inlet pressure that will provide adequate NPSH for the pump?

A. 60 psia

B. 83 psia

C. 108 psia

D. 127 psia

ANSWER: D.

TOPIC: 191004
KNOWLEDGE: K1.06 [3.2/3.3]
QID: P6510 (B6510)

Refer to the drawing of a steam condenser, hotwell, and condensate pump (see figure below).

Given the following:

- The eye of the pump impeller is located 6.0 feet below the bottom of the hotwell.
- Hotwell water level is 6.0 feet.
- Hotwell water temperature is 90°F.
- Condenser pressure is 1.3 psia.
- Fluid velocity and friction head losses are zero.

What is the net positive suction head available to the condensate pump?

A. 6.0 feet

B. 7.4 feet

C. 12.0 feet

D. 13.4 feet

ANSWER: D.

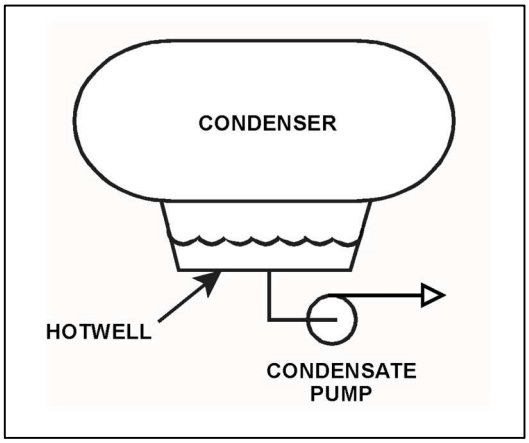

TOPIC: 191004
KNOWLEDGE: K1.06 [3.2/3.3]
QID: P6810 (B6811)

The current conditions for a centrifugal water pump are as follows:

Pump suction pressure = 140 psia
Pump suction temperature = 300°F

The pump requires a net positive suction head (NPSH) of 150 feet for pumping water at 300°F. Which one of the following is the lowest listed pump suction pressure that will provide the required NPSH for the current pump suction temperature?

A. 132 psia

B. 128 psia

C. 73 psia

D. 67 psia

ANSWER: B.

TOPIC: 191004
KNOWLEDGE: K1.06 [3.2/3.3]
QID: P6911 (B6911)

A centrifugal pump is taking suction from an open water storage tank. The pump is located at the base of the tank, takes a suction from the bottom of the tank, and discharges to a pressurized system.

Given:

- The tank is filled to a level of 26 feet with 60°F water.
- The pump is currently operating at 50 gpm.
- The pump requires 30 feet of net positive suction head.

Which one of the following describes the current pump status, and how the pump flow rate will be affected as the level in the storage tank decreases?

A. The pump is currently cavitating; pump flow rate will decrease continuously as tank level decreases.

B. The pump is currently cavitating; pump flow rate will remain about the same until the tank empties.

C. The pump is currently <u>not</u> cavitating; pump flow rate will gradually decrease with tank level and then rapidly decrease when cavitation begins at a lower tank level.

D. The pump is currently <u>not</u> cavitating; pump flow rate will gradually decrease with tank level and then rapidly decrease as the pump becomes air bound when the tank empties.

ANSWER: D.

TOPIC: 191004
KNOWLEDGE: K1.06 [3.2/3.3]
QID: P7110 (B7112)

Refer to the drawing of a centrifugal pump taking suction from a reservoir.

The pump is located on shore, with the eye of the pump 4 feet higher than the reservoir water level. The pump's suction line extends 4 feet below the surface of the reservoir. Which one of the following modifications would increase the pump's available net positive suction head? (Assume the reservoir is at a uniform temperature and ignore any changes in suction line head loss due to friction.)

A. Raise the pump and suction line by 2 feet.

B. Lower the pump and suction line by 2 feet.

C. Lengthen the suction line to take a suction from 2 feet deeper.

D. Shorten the suction line to take a suction from 2 feet shallower.

ANSWER: B.

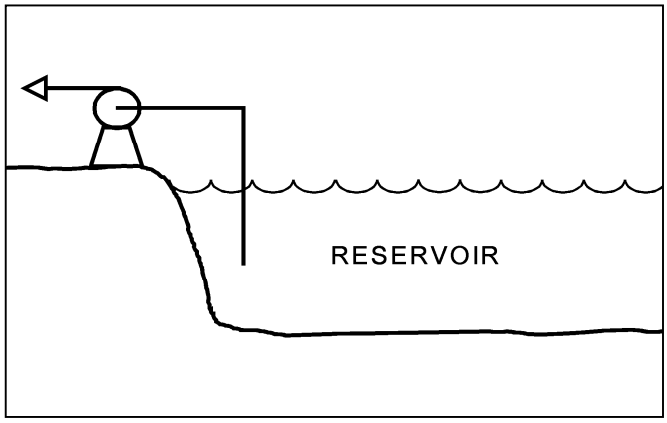

TOPIC: 191004
KNOWLEDGE: K1.06 [3.2/3.3]
QID: P7624 (B7624)

Refer to the drawing of a centrifugal pump taking suction from a reservoir (see figure below).

The pump is located on shore, with the eye of the pump 4 feet higher than the reservoir water level. The pump's suction line extends 4 feet below the surface of the reservoir. Which one of the following modifications would decrease the pump's available net positive suction head? (Assume the reservoir is at a uniform temperature and ignore any changes in suction line head loss due to friction.)

A. Raise the pump and suction line by 2 feet.

B. Lower the pump and suction line by 2 feet.

C. Lengthen the suction line to take a suction from 2 feet deeper.

D. Shorten the suction line to take a suction from 2 feet shallower.

ANSWER: A.

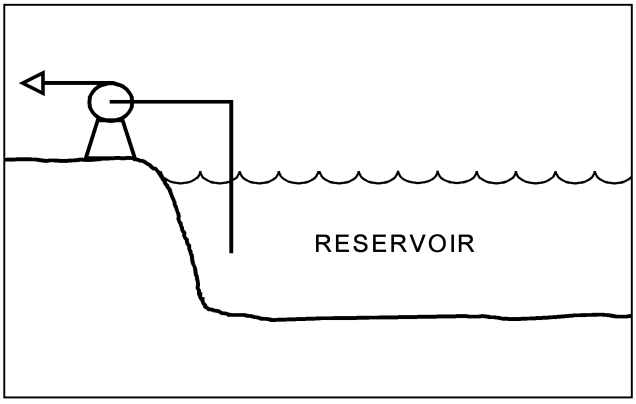

TOPIC: 191004
KNOWLEDGE: K1.06 [3.2/3.3]
QID: P7643 (B7643)

Refer to the drawing of a centrifugal pump with a water storage tank for its suction source. The storage tank is open to the atmosphere and contains 20 feet of water at 60°F. The pump is currently stopped.

If the temperature of the water in the storage tank and pump suction piping increases to 80°F, with the accompanying water expansion, the suction head for the pump will _____; and the available net positive suction head for the pump will _____.

A. increase; increase

B. increase; decrease

C. remain the same; increase

D. remain the same; decrease

ANSWER: B.

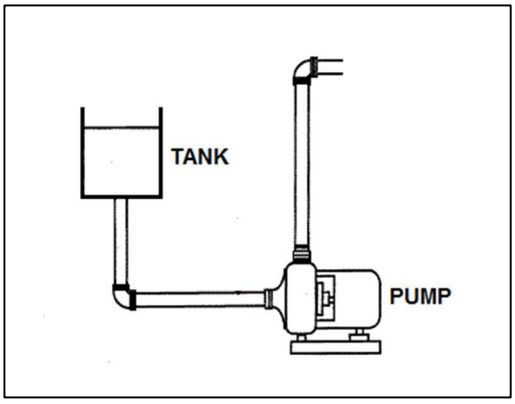

TOPIC: 191004
KNOWLEDGE: K1.06 [3.2/3.3]
QID: P7664 (B7664)

A centrifugal pump is taking suction from an open water storage tank. The pump is located at the base of the tank, takes a suction from the bottom of the tank, and discharges to a pressurized system.

Given:

- The storage tank is filled to a level of 26 feet with 60°F water.
- The pump requires 45 feet of net positive suction head.
- The pump is currently operating at 50 gpm.

Which one of the following describes the current pump status, and how the pump flow rate will be affected as the level in the storage tank decreases?

A. The pump is currently cavitating; pump flow rate will decrease continuously as tank level decreases.

B. The pump is currently cavitating; pump flow rate will remain about the same until the tank empties.

C. The pump is currently <u>not</u> cavitating; pump flow rate will gradually decrease with tank level, and then rapidly decrease when the tank empties.

D. The pump is currently <u>not</u> cavitating; pump flow rate will gradually decrease with tank level, and then rapidly decrease when cavitation begins before the tank empties.

ANSWER: D.

TOPIC: 191004
KNOWLEDGE: K1.06 [3.2/3.3]
QID: P7683 (B7683)

A centrifugal pump is operating normally in a closed cooling water system. If system pressure is increased by 10 psi, the available net positive suction head (NPSH) for the pump will _____; and the pump mass flow rate will _____. (Assume the water density does not change and the minimum required NPSH for the pump is maintained.)

A. increase; increase

B. increase; remain the same

C. decrease; decrease

D. decrease; remain the same

ANSWER: B.

TOPIC: 191004
KNOWLEDGE: K1.06 [3.2/3.3]
QID: P7694 (B7694)

A centrifugal water pump is operating normally with the following parameters:

Inlet water pressure = 15 psia
Water temperature = 100°F
Pump head added = 100 feet

What is the pump discharge pressure?

A. 43 psia

B. 58 psia

C. 100 psia

D. 115 psia

ANSWER: B.

TOPIC: 191004
KNOWLEDGE: K1.06 [3.2/3.3]
QID: P7704 (B7704)

Refer to the drawing of a centrifugal pump with a water storage tank for its suction source. The storage tank is open to the atmosphere and contains 20 feet of water at 90°F. The pump is currently stopped.

If the temperature of the water in the storage tank and pump suction piping decreases to 70°F, with the accompanying water contraction, the suction head for the pump will _____; and the available net positive suction head for the pump will _____.

A. decrease; increase

B. decrease; remain the same

C. remain the same; increase

D. remain the same; remain the same

ANSWER: A.

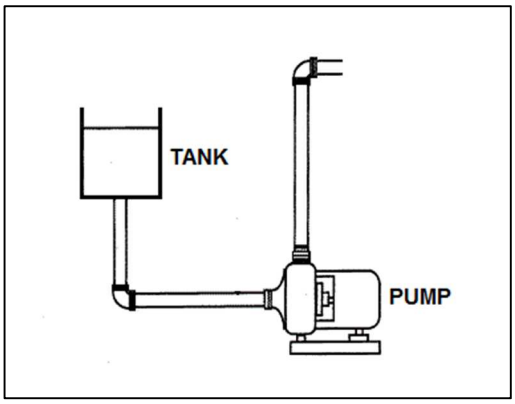

TOPIC: 191004
KNOWLEDGE: K1.07 [2.9/2.9]
QID: P24

Shutting the discharge valve on an operating motor-driven radial-flow centrifugal pump in a water system will cause the motor amps to _____ and the pump discharge pressure to _____.

A. decrease, increase

B. decrease, decrease

C. increase, increase

D. increase, decrease

ANSWER: A.

TOPIC: 191004
KNOWLEDGE: K1.07 [2.9/2.9]
QID: P117

When starting an AC motor-driven centrifugal pump, the response of motor current will be...

A. low starting amps, increasing to a higher equilibrium value of running amps.

B. low starting amps, remaining at a low equilibrium value of running amps.

C. high starting amps, decreasing to a lower equilibrium value of running amps.

D. high starting amps, remaining at a high equilibrium value of running amps.

ANSWER: C.

TOPIC: 191004
KNOWLEDGE: K1.07 [2.9/2.9]
QID: P224

A constant-speed radial-flow centrifugal pump motor draws the least current when the pump is...

A. at runout conditions.

B. at operating conditions.

C. accelerating to normal speed during start.

D. at shutoff head.

ANSWER: D.

TOPIC: 191004
KNOWLEDGE: K1.07 [2.9/2.9]
QID: P424

A centrifugal pump was initially circulating water at 100°F in a cooling water system. Over several hours, the water temperature increased to 150°F. Assuming system flow rate (gpm) was constant, pump motor amps _____ during the heatup because _____.

A. decreased; the water density decreased

B. decreased; the water volume increased

C. increased; the water density decreased

D. increased; the water volume increased

ANSWER: A.

TOPIC: 191004
KNOWLEDGE: K1.07 [2.9/2.9]
QID: P821

An AC motor-driven centrifugal pump was initially circulating water at 200°F in a cooling water system. Over several hours, the circulating water temperature decreased to 120°F while system flow rate (gpm) remained constant.

During the system cooldown, pump motor current _____ because _____

A. decreased; the water density increased

B. increased; the water density increased

C. decreased; the pump motor efficiency decreased

D. increased; the pump motor efficiency decreased

ANSWER: B.

TOPIC: 191004
KNOWLEDGE: K1.07 [2.9/2.9]
QID: P923

A centrifugal pump is operating in a closed system with all valves fully open. If the pump discharge valve is throttled 75 percent closed, pump motor current will...

A. increase and stabilize at a higher value.

B. decrease and stabilize at a lower value.

C. increase briefly, then return to the original value.

D. decrease briefly, then return to the original value.

ANSWER: B.

TOPIC: 191004
KNOWLEDGE: K1.07 [2.9/2.9]
QID: P1223

Which one of the following operating conditions for a motor-driven radial-flow centrifugal pump will result in the most current being drawn by the pump motor?

A. Pump discharge head is at shutoff head.

B. The pump is operating at minimum flow.

C. Pump discharge head is at design head.

D. The pump is operating at runout.

ANSWER: D.

TOPIC: 191004
KNOWLEDGE: K1.07 [2.9/2.9]
QID: P1420 (B2219)

An AC motor-driven centrifugal pump was initially circulating water at 150°F in a cooling water system. Over several hours, the circulating water temperature decreased to 100°F. Assuming system flow rate (gpm) remained constant, pump motor current _____ because _____ increased.

A. increased; water density

B. increased; motor efficiency

C. decreased; water density

D. decreased; motor efficiency

ANSWER: A.

TOPIC: 191004
KNOWLEDGE: K1.07 [2.9/2.9]
QID: P1622 (B922)

An AC motor-driven centrifugal pump is circulating water at 180°F with a motor current of 100 amps. After several hours, system temperature has changed such that the water density has increased by 4 percent.

Assuming pump head and volumetric flow rate do not change, which one of the following is the new pump motor current?

A. 84 amps

B. 96 amps

C. 104 amps

D. 116 amps

ANSWER: C.

TOPIC: 191004
KNOWLEDGE: K1.07 [2.9/2.9]
QID: P1824 (B419)

Refer to the drawing of a cooling water system (see figure below).

The centrifugal pump was initially circulating water at 100°F. Over several hours, the water temperature increased to 200°F. Assuming system flow rate (gpm) was constant, pump motor amps _____ during the heatup because _____.

A. decreased; water density decreased

B. increased; water density decreased

C. decreased; pump shaft speed increased

D. increased; pump shaft speed increased

ANSWER: A.

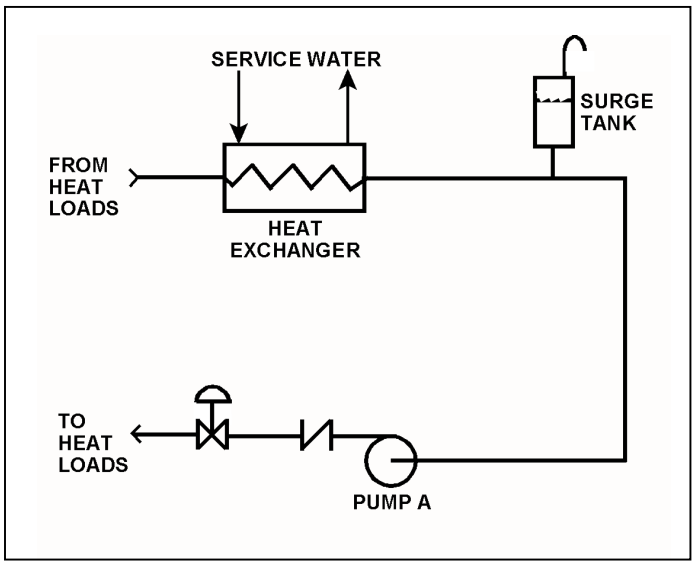

TOPIC: 191004
KNOWLEDGE: K1.07 [2.9/2.9]
QID: P1924 (B115)

A constant-speed radial-flow centrifugal pump motor draws the least current when the pump is...

A. at maximum rated flow conditions.

B. operating on recirculation flow only.

C. accelerating to normal speed during start.

D. at shutoff head with no recirculation flow.

ANSWER: D.

TOPIC: 191004
KNOWLEDGE: K1.07 [2.9/2.9]
QID: P2023

A reactor coolant pump (RCP) was initially circulating reactor coolant at 100°F. Over several hours, the reactor coolant temperature increased to 150°F.

Assuming coolant flow rate (gpm) was constant, RCP motor amps _____ during the heatup because _____.

A. decreased; coolant density has decreased

B. decreased; system head losses have increased

C. increased; coolant density has increased

D. increased; system head losses have decreased

ANSWER: A.

TOPIC: 191004
KNOWLEDGE: K1.07 [2.9/2.9]
QID: P2123 (B622)

A typical radial-flow centrifugal pump is operating at rated conditions in an open system with all valves fully open. If the pump discharge valve is throttled to 50 percent closed, pump discharge pressure will _____; and pump motor current will _____.

A. decrease; decrease

B. decrease; increase

C. increase; increase

D. increase; decrease

ANSWER: D.

TOPIC: 191004
KNOWLEDGE: K1.07 [2.9/2.9]
QID: P2124 (B2423)

A centrifugal pump in a cooling water system is operating with a motor current of 200 amps. After several hours, the system water density has increased by 3 percent, while the pump head and volumetric flow rate have remained the same.

Which one of the following is the new pump motor current?

A. 203 amps

B. 206 amps

C. 218 amps

D. 236 amps

ANSWER: B.

TOPIC: 191004
KNOWLEDGE: K1.07 [2.9/2.9]
QID: P2520 (B2520)

A constant-speed centrifugal pump motor draws the most current when the pump is...

A. at maximum rated flow conditions.

B. operating at runout flow.

C. accelerating to normal speed during start.

D. at shutoff head with no recirculation flow.

ANSWER: C.

TOPIC: 191004
KNOWLEDGE: K1.07 [2.9/2.9]
QID: P2821 (B2822)

An AC motor-driven centrifugal pump was just started. During the start, motor current remained peaked for 6 seconds before decreasing to standard running current. Normally, the starting current peak lasts about 4 seconds.

Which one of the following could have caused the extended starting current peak?

A. The pump shaft was seized and did not turn.

B. The pump was initially rotating slowly in the reverse direction.

C. The pump discharge check valve was stuck closed and did not open.

D. The pump was initially air bound, and then primed itself after 6 seconds of operation.

ANSWER: B.

TOPIC: 191004
KNOWLEDGE: K1.07 [2.9/2.9]
QID: P2827 (B1726)

A cooling water pump is being driven by an AC induction motor. Which one of the following describes how and why pump motor current will change if the pump shaft shears?

A. Decreases due to decreased pump work.

B. Decreases due to decreased counter electromotive force.

C. Increases due to increased pump work.

D. Increases due to decreased counter electromotive force.

ANSWER: A.

TOPIC: 191004
KNOWLEDGE: K1.07 [2.9/2.9]
QID: P2925 (B2921)

A centrifugal pump is circulating water at 180°F with a pump motor current of 200 amps. After several hours, system temperature has changed such that the water density has increased by 6 percent.

Assuming pump head and volumetric flow rate do not change, which one of the following is the new pump motor current?

A. 203 amps

B. 206 amps

C. 212 amps

D. 224 amps

ANSWER: C.

TOPIC: 191004
KNOWLEDGE: K1.07 [2.9/2.9]
QID: P3822 (B3820)

An AC motor-driven centrifugal water pump was just started. During the start, motor current remained peaked for 2 seconds, and then decreased and stabilized at about one-fifth the standard running current. Normally, the starting current peak lasts about 4 seconds.

Which one of the following could have caused the abnormal start indications above?

A. The pump shaft was initially seized and the motor breaker opened.

B. The pump was initially rotating slowly in the reverse direction.

C. The pump was initially air bound, and then primed itself after 2 seconds of operation.

D. The coupling between the motor and pump shafts was left disconnected after maintenance.

ANSWER: D.

TOPIC: 191004
KNOWLEDGE: K1.07 [2.9/2.9]
QID: P4811 (B4811)

A radial-flow centrifugal cooling water pump is driven by an AC induction motor. The pump can supply cooling water to several heat loads, all of which are in parallel alignment. The following pump conditions initially exist:

Pump motor current	=	100 amps
Pump flow rate	=	400 gpm
Pump suction temperature	=	70°F

Four hours later, the motor is drawing 95 amps. Which one of the following could be responsible for the observed decrease in motor amps?

A. The temperature of the cooling water being pumped decreased to 60°F with no change in pump flow rate.

B. The temperature of the cooling water being pumped increased to 80°F with no change in pump flow rate.

C. Cooling water flow was established to an additional heat load with no change in the temperature of the cooling water being pumped.

D. Cooling water flow was isolated from an out-of-service heat load with no change in the temperature of the cooling water being pumped.

ANSWER: D.

TOPIC: 191004
KNOWLEDGE: K1.07 [2.9/2.9]
QID: P6310 (B6311)

A radial-flow centrifugal cooling water pump is driven by an AC induction motor. The pump can supply cooling water to several heat loads, all of which are in parallel alignment. The following pump conditions initially exist:

Pump motor current	=	100 amps
Pump flow rate	=	400 gpm
Pump suction temperature	=	70°F

Four hours later, the motor is drawing 105 amps. Which one of the following could be responsible for the observed increase in motor current?

A. The temperature of the cooling water being pumped decreased to 60°F with no change in pump flow rate.

B. The temperature of the cooling water being pumped increased to 80°F with no change in pump flow rate.

C. Cooling water flow was established to an additional heat load with no change in the temperature of the cooling water being pumped.

D. Cooling water flow was isolated from an out-of-service heat load with no change in the temperature of the cooling water being pumped.

ANSWER: C.

TOPIC: 191004
KNOWLEDGE: K1.07 [2.9/2.9]
QID: P7512 (B1026)

A motor-driven centrifugal pump exhibited indications of pump failure while being started. Which one of the following pairs of observations indicate that the pump failure is a sheared impeller shaft?

A. Excessive duration of high starting current and motor breaker trips.

B. Excessive duration of high starting current and no change in system flow rate.

C. Lower than normal running current and motor breaker trips.

D. Lower than normal running current and no change in system flow rate.

ANSWER: D.

TOPIC: 191004
KNOWLEDGE: K1.08 [2.4/2.6]
QID: P225

Some large centrifugal pumps are started with their discharge valves closed to prevent...

A. cavitation in the pump.

B. lifting the discharge relief valve.

C. loss of recirculation (miniflow).

D. excessive current in the pump motor.

ANSWER: D.

TOPIC: 191004
KNOWLEDGE: K1.08 [2.4/2.6]
QID: P1325 (B1822)

Some large centrifugal pumps are interlocked so that the pump will not start unless its discharge valve is at least 90 percent closed. This interlock is provided to minimize...

A. pump discharge pressure.

B. heating of the pumped fluid.

C. the potential for cavitation at the pump suction.

D. the duration of the pump motor starting current.

ANSWER: D.

TOPIC: 191004
KNOWLEDGE: K1.08 [2.4/2.6]
QID: P2622 (B821)

Which one of the following contains two reasons for starting a typical radial-flow centrifugal pump with the discharge piping full of water and the discharge valve closed?

A. Prevent pump runout and prevent motor overspeed.

B. Prevent pump runout and ensure lubrication of pump seals.

C. Prevent water hammer and ensure adequate pump recirculation flow.

D. Prevent water hammer and prevent excessive duration of starting current.

ANSWER: D.

TOPIC: 191004
KNOWLEDGE: K1.09 [2.4/2.5]
QID: P323

Refer to the drawing of a cooling water system and the associated pump/system operating curves (see figure below) in which pumps A and B are identical single-speed centrifugal pumps and only pump A is operating.

If pump B is started, system flow rate will be _____ and common pump discharge pressure will be _____.

A. the same; higher

B. higher; the same

C. the same; the same

D. higher; higher

ANSWER: D.

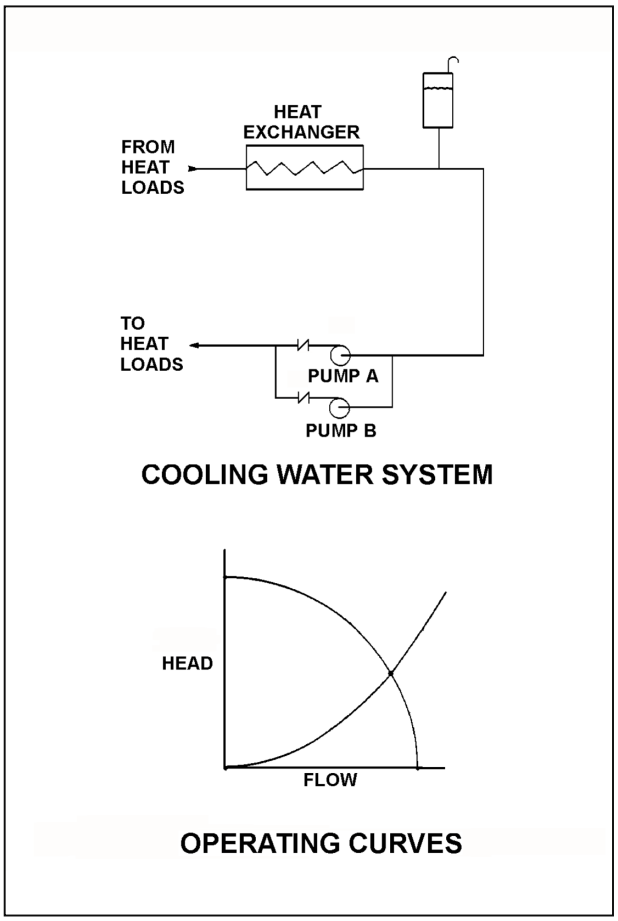

TOPIC: 191004
KNOWLEDGE: K1.09 [2.4/2.5]
QID: P1823

Refer to the drawing of a cooling water system and the associated pump/system operating curves (see figure below).

Pumps A and B are identical single-speed centrifugal pumps, and only pump A is operating. If pump B is started, after the system stabilizes system flow rate will be...

A. twice the original flow.

B. the same as the original flow.

C. less than twice the original flow.

D. more than twice the original flow.

ANSWER: C.

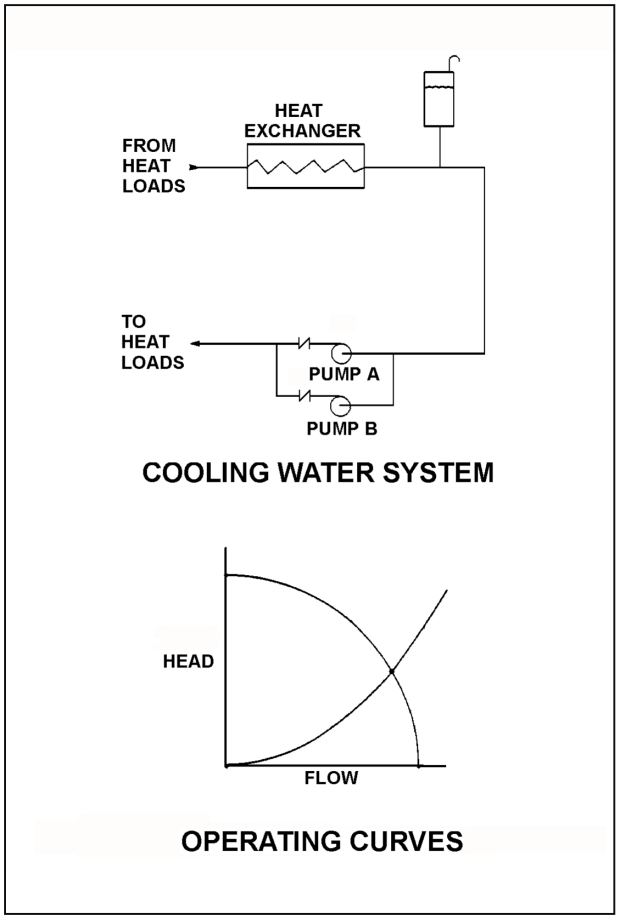

TOPIC: 191004
KNOWLEDGE: K1.09 [2.4/2.5]
QID: P2223

A centrifugal pump is operating in parallel with a positive displacement pump in an open water system. Each pump has the same maximum design pressure.

If pump discharge pressure increases to the maximum design pressure of each pump, the centrifugal pump will be operating near _____ flow rate and the positive displacement pump will be operating near _____ flow rate.

A. minimum; minimum

B. minimum; maximum rated

C. maximum rated; minimum

D. maximum rated; maximum rated

ANSWER: B.

TOPIC: 191004
KNOWLEDGE: K1.09 [2.4/2.5]
QID: P2324

Refer to the drawing of a cooling water system (see figure below).

Pumps A and B are identical single-speed centrifugal pumps and both pumps are initially operating when pump B trips. After the system stabilizes, system flow rate will be...

A. more than one-half the original flow.

B. one-half the original flow.

C. less than one-half the original flow.

D. the same; only the pump head will change.

ANSWER: A.

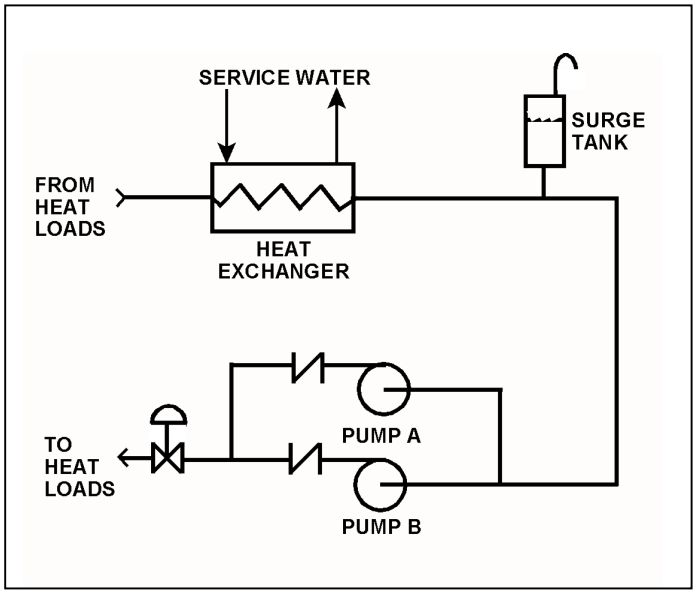

TOPIC: 191004
KNOWLEDGE: K1.12 [2.5/2.7]
QID: P324

Which one of the following is an indication of pump runout?

A. Low pump flow rate

B. High pump vibration

C. Low pump motor current

D. High pump discharge pressure

ANSWER: B.

TOPIC: 191004
KNOWLEDGE: K1.12 [2.5/2.7]
QID: P823

Which one of the following is an indication of pump runout?

A. High discharge pressure

B. Low pump motor current

C. High pump flow rate

D. Pump flow reversal

ANSWER: C.

TOPIC: 191004
KNOWLEDGE: K1.12 [2.5/2.7]
QID: P1123 (B1920)

Which one of the following describes typical radial-flow centrifugal pump runout conditions?

A. High discharge pressure, low flow, high power demand

B. High discharge pressure, high flow, low power demand

C. Low discharge pressure, low flow, low power demand

D. Low discharge pressure, high flow, high power demand

ANSWER: D.

TOPIC: 191004
KNOWLEDGE: K1.12 [2.5/2.7]
QID: P1623 (B1323)

A centrifugal pump is operating at its maximum design flow rate, delivering water through two parallel valves. Valve A is half open, and valve B is one quarter open.

Which one of the following will occur if both valves are fully opened?

A. The pump will operate at shutoff head.

B. The pump available net positive suction head will increase.

C. The pump required net positive suction head will decrease.

D. The pump will operate at runout conditions.

ANSWER: D.

TOPIC: 191004
KNOWLEDGE: K1.12 [2.5/2.7]
QID: P1721 (B1024)

Refer to the drawing of centrifugal pump and system operating curves (see figure below).

Which point represents pump operation at runout conditions?

A. Point A

B. Point B

C. Point C

D. Point D

ANSWER: C.

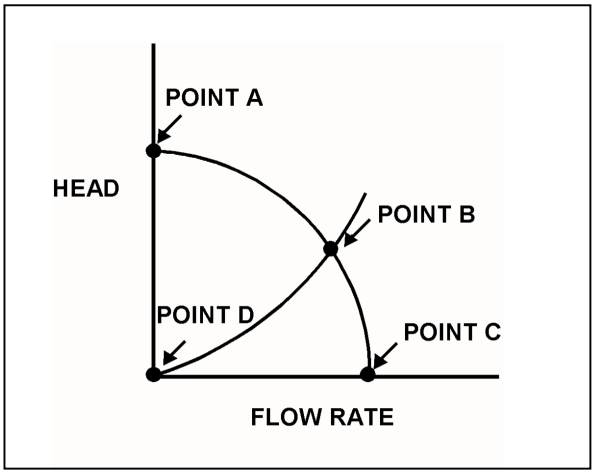

TOPIC: 191004
KNOWLEDGE: K1.12 [2.5/2.7]
QID: P3910 (B3910)

Refer to the drawing of a cooling water system in which only centrifugal pump A is operating and the common pump discharge valve is currently 90 percent open (see figure below).

An abnormal total heat load on the cooling water system is causing pump A to approach operation at runout conditions. Which one of the following will cause pump A to operate further away from runout conditions? (Assume that satisfactory available net positive suction head is maintained at all times.)

A. Starting pump B.

B. Raising the water level in the surge tank by 2 feet.

C. Decreasing heat exchanger service water flow rate by 10 percent.

D. Positioning the common pump discharge valve to 100 percent open.

ANSWER: A.

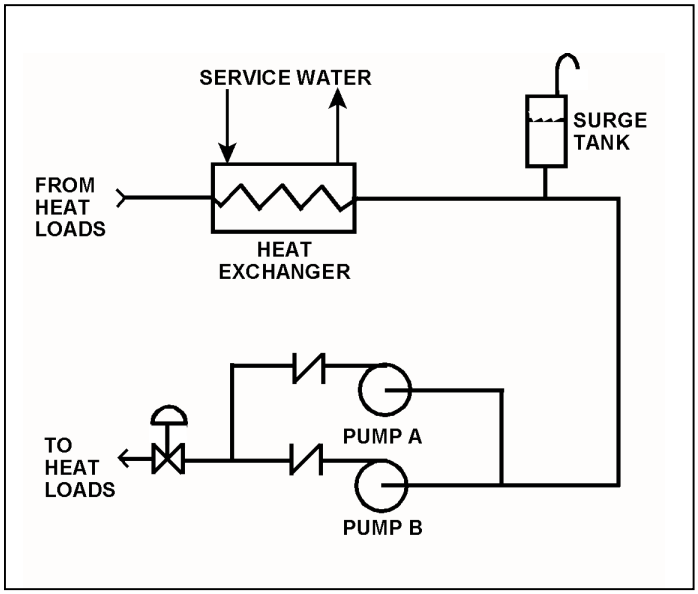

TOPIC: 191004
KNOWLEDGE: K1.12 [2.5/2.7]
QID: P5111 (B5111)

A flow-limiting venturi in the discharge piping of a centrifugal pump decreases the potential for the pump to experience...

A. runout

B. reverse flow

C. shutoff head

D. water hammer

ANSWER: A.

TOPIC: 191004
KNOWLEDGE: K1.14 [2.4/2.5]
QID: P623 (B1423)

Refer to the drawing of a lube oil temperature control system and the associated pump/system operating curves (see figure below).

The pump is initially operating at point B. If the temperature control valve modulates further open, operating point B will be located on curve _____ closer to point _____.

A. 1; D

B. 2; A

C. 1; E

D. 2; C

ANSWER: D.

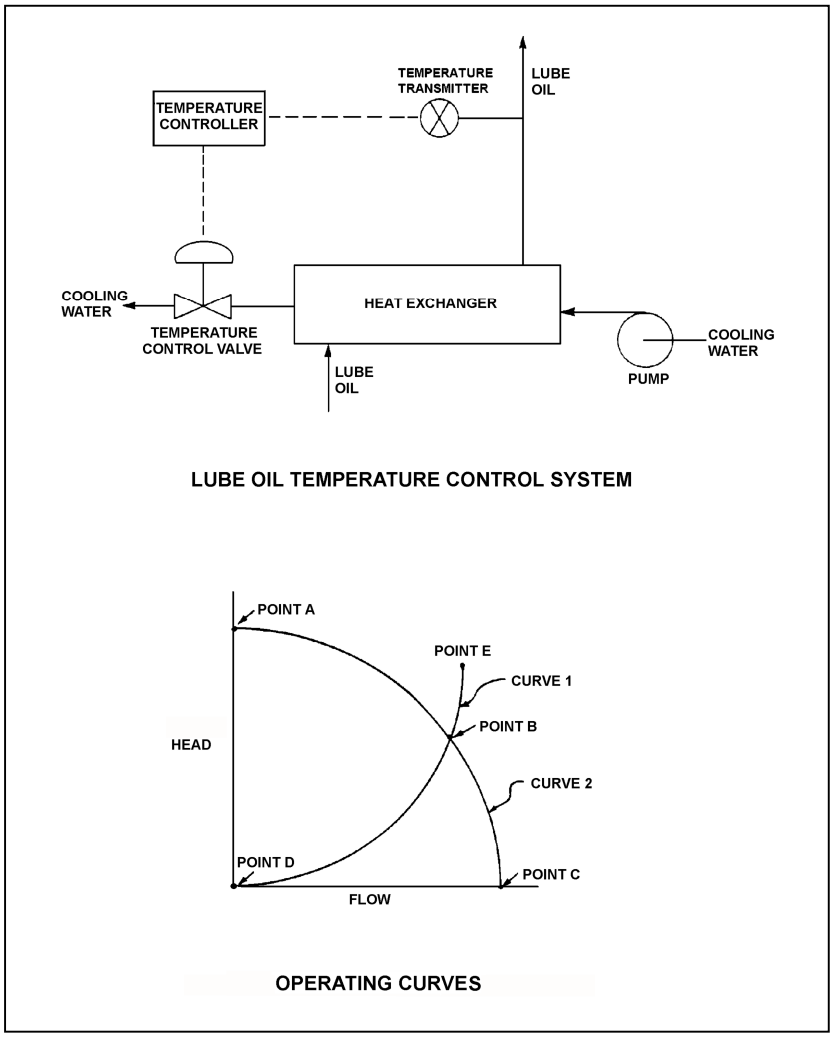

TOPIC: 191004
KNOWLEDGE: K1.14 [2.4/2.5]
QID: P723 (B722)

Refer to the drawing of a lube oil temperature control system and the associated pump/system operating curves (see figure below).

The pump is operating at point B on the operating curve. If the temperature control valve modulates further closed, operating point B will be located on curve _____ closer to point _____.

A. 1; D

B. 2; A

C. 1; E

D. 2; C

ANSWER: B.

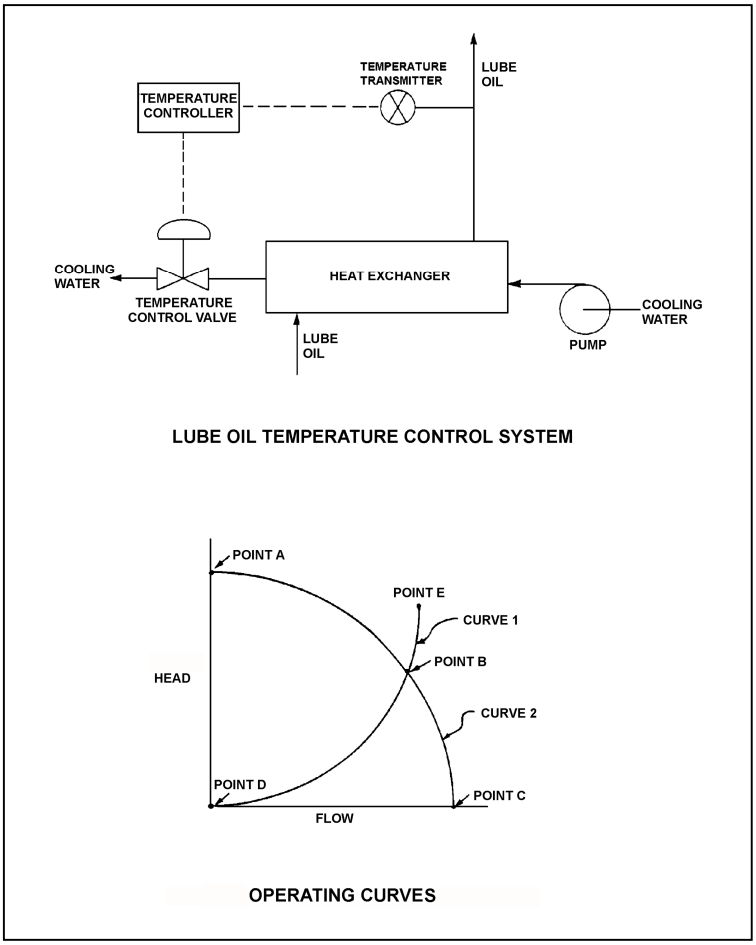

TOPIC: 191004
KNOWLEDGE: K1.14 [2.4/2.5]
QID: P824

Refer to the drawing of four sets of centrifugal pump and system operating curves (see figure below). Each set of curves shows a combination of two pump/system operating conditions.

Initially, a centrifugal pump is operating with a partially open discharge valve in a closed system. The discharge valve is then opened fully.

Which set of operating curves depicts the "before" and "after" conditions described above?

A. 1.

B. 2.

C. 3.

D. 4.

ANSWER: D.

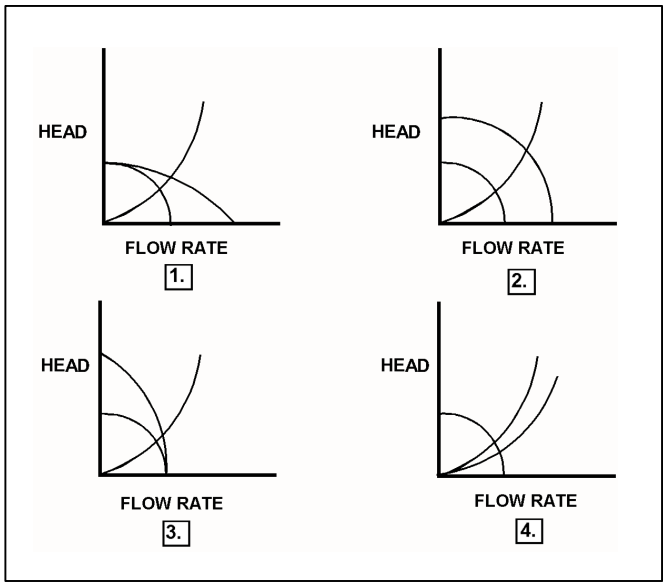

TOPIC: 191004
KNOWLEDGE: K1.14 [2.4/2.5]
QID: P926 (B1578)

Refer to the drawing of four sets of centrifugal pump and system operating curves (see figure below). Each set of curves shows the results of a change in pump and/or system operating conditions.

Two identical constant-speed centrifugal pumps are operating in series in an open system when one pump trips.

Which set of operating curves depicts the "before" and "after" conditions described above?

A. 1.

B. 2.

C. 3.

D. 4.

ANSWER: C.

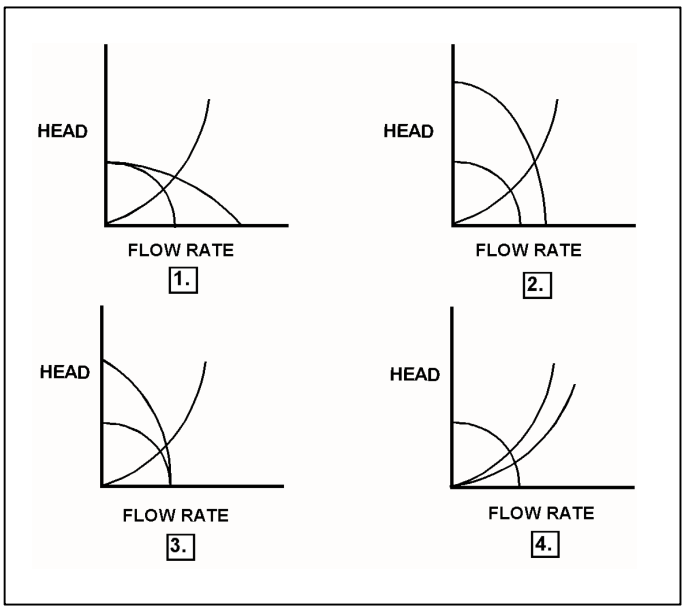

TOPIC: 191004
KNOWLEDGE: K1.14 [2.4/2.5]
QID: P1324 (B1878)

Refer to the drawing of four sets of centrifugal pump and system operating curves (see figure below). Each set of curves shows the results of a change in pump and/or system operating conditions.

Initially, a single centrifugal pump is operating in a cooling water system. Another identical centrifugal pump is then started in series with the first.

Which set of operating curves depicts the "before" and "after" conditions described above?

A. 1.

B. 2.

C. 3.

D. 4.

ANSWER: C.

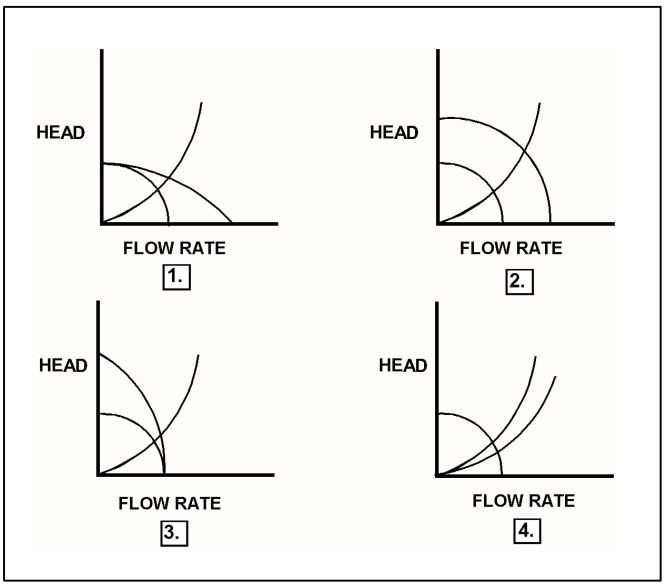

TOPIC: 191004
KNOWLEDGE: K1.14 [2.4/2.5]
QID: P1524 (B2279)

Refer to the drawing of four sets of centrifugal pump and system operating curves (see figure below). Each set of curves shows the results of a change in pump and/or system operating conditions.

Two identical constant-speed centrifugal pumps are operating in parallel in a closed system when one pump trips.

Which set of operating curves depicts the "before" and "after" conditions described above?

A. 1.

B. 2.

C. 3.

D. 4.

ANSWER: A.

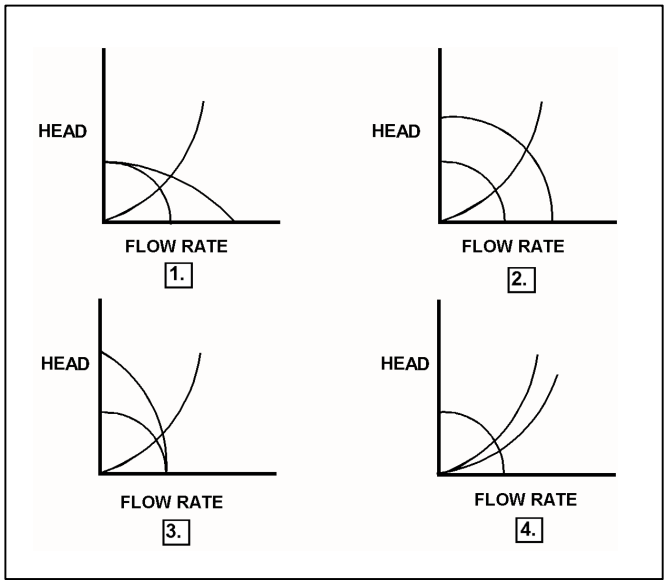

TOPIC: 191004
KNOWLEDGE: K1.14 [2.4/2.5]
QID: P1624

Refer to the drawing of four sets of centrifugal pump and system operating curves (see figure below). Each set of curves shows a combination of two pump/system operating conditions.

Initially, a constant-speed centrifugal pump was operating in an closed system. Another identical centrifugal pump was then started in parallel with the first.

Which set of operating curves depicts the "before" and "after" conditions described above?

A. 1.

B. 2.

C. 3.

D. 4.

ANSWER: A.

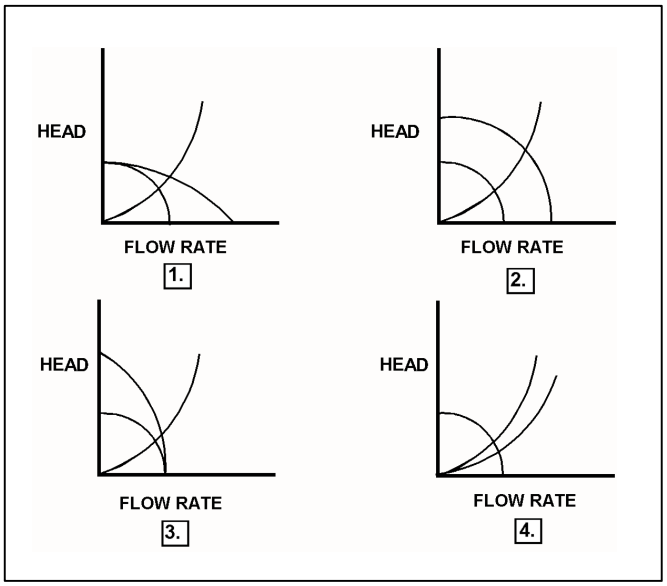

TOPIC: 191004
KNOWLEDGE: K1.14 [2.4/2.5]
QID: P1724 (B1780)

Refer to the drawing of four sets of centrifugal pump and system operating curves (see figure below). Each set of curves shows the results of a change in pump and/or system operating conditions.

Initially, a centrifugal pump is operating in a closed water system and discharging through a single heat exchanger. A second heat exchanger is then placed in service in parallel with the first.

Which set of operating curves depicts the "before" and "after" conditions described above?

A. 1.

B. 2.

C. 3.

D. 4.

ANSWER: D.

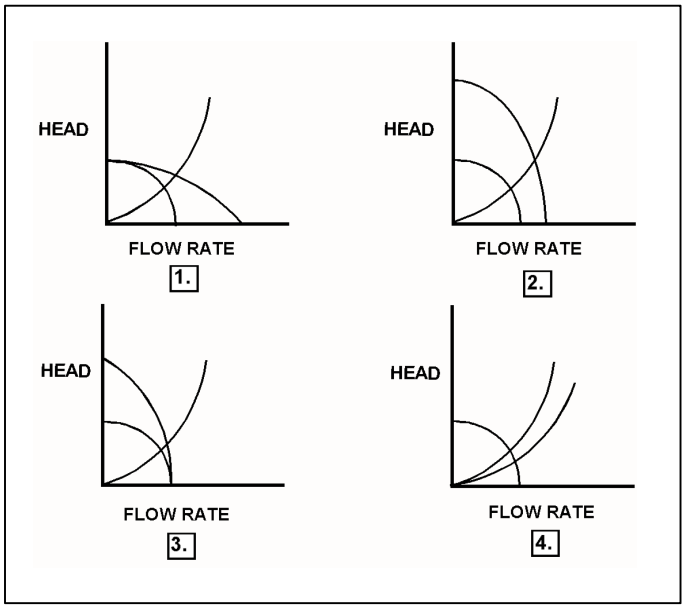

TOPIC: 191004
KNOWLEDGE: K1.14 [2.4/2.5]
QID: P1921 (B925)

Refer to the drawing of centrifugal pump and system operating curves (see figure below).

Which one of the following determines the general shape of the curve from point C to point D?

A. The frictional and throttling losses in the piping system as the system flow rate increases.

B. The frictional losses between the pump impeller and its casing as the differential pressure (D/P) across the pump increases.

C. The pump flow losses, due to the decrease in available net positive suction head as the system flow rate increases.

D. The pump flow losses, due to back leakage through the clearances between the pump impeller and casing as the D/P across the pump increases.

ANSWER: A.

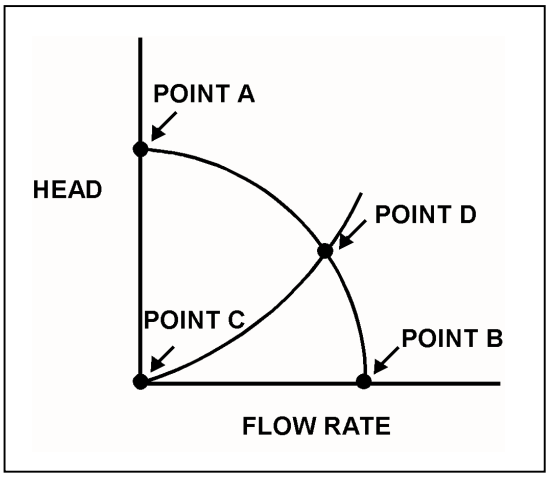

TOPIC: 191004
KNOWLEDGE: K1.14 [2.4/2.5]
QID: P2325 (B2323)

Refer to the drawing of centrifugal pump and system operating curves (see figure below).

A centrifugal pump is initially operating at point B. If the pump speed is reduced by one-half, the new operating point will be located on curve _____ closer to point _____.

A. 1; D

B. 2; A

C. 1; E

D. 2; C

ANSWER: A.

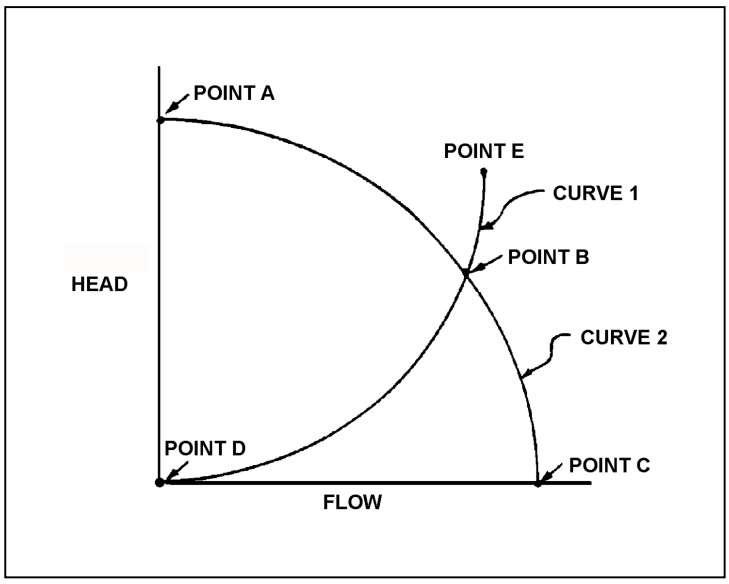

TOPIC: 191004
KNOWLEDGE: K1.14 [2.4/2.5]
QID: P2422 (B2422)

Refer to the drawing of a lube oil temperature control system (see figure below).

The pump is operating with the temperature control valve one-half open. If the temperature control valve modulates farther closed, system head loss will _____; and pump head will _____.

A. increase, decrease

B. increase, increase

C. decrease, decrease

D. decrease, increase

ANSWER: B.

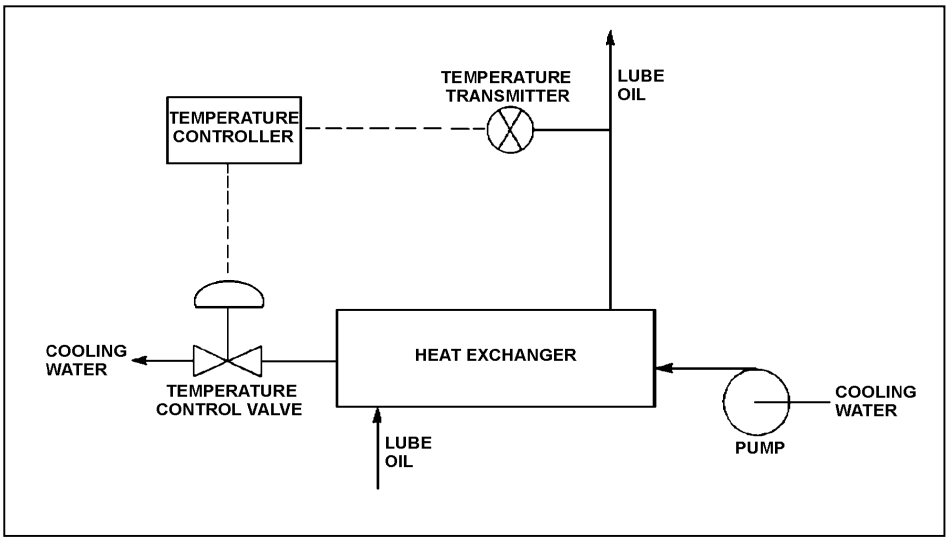

TOPIC: 191004
KNOWLEDGE: K1.14 [2.4/2.5]
QID: P2523 (B2524)

Refer to the drawing of a lube oil temperature control system and the associated pump/system operating curves (see figure below).

If the pump is initially operating at point B, how will the operating point change if the temperature controller setpoint is decreased by 10°F?

A. Operating point B will be located on curve 1 closer to point E.

B. Operating point B will be located on curve 1 closer to point D.

C. Operating point B will be located on curve 2 closer to point A.

D. Operating point B will be located on curve 2 closer to point C.

ANSWER: D.

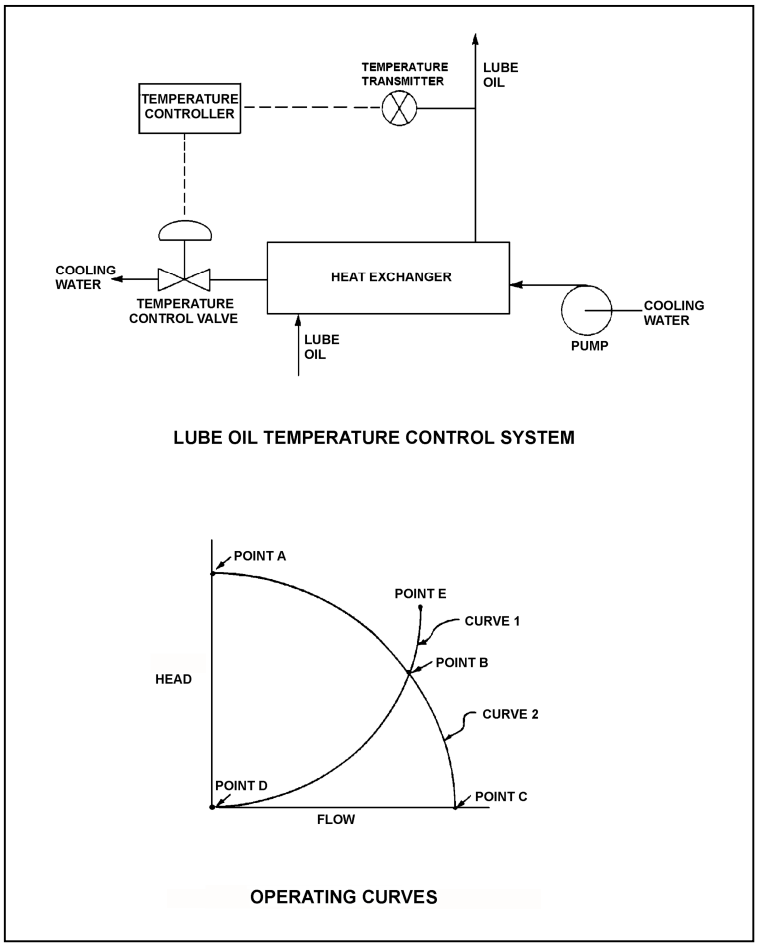

TOPIC: 191004
KNOWLEDGE: K1.14 [2.4/2.5]
QID: P2723 (B2718)

Refer to the drawing showing two operating points for the same centrifugal pump (see figure below).

Operating point A was generated from pump performance data taken six months ago. Current pump performance data was used to generate operating point B. Which one of the following would cause the observed difference between operating points A and B?

A. The pump discharge valve was more open when data was collected for operating point A.

B. The pump discharge valve was more closed when data was collected for operating point A.

C. The pump internal components have worn since data was collected for operating point A.

D. The system piping head loss has increased since data was collected for operating point A.

ANSWER: C.

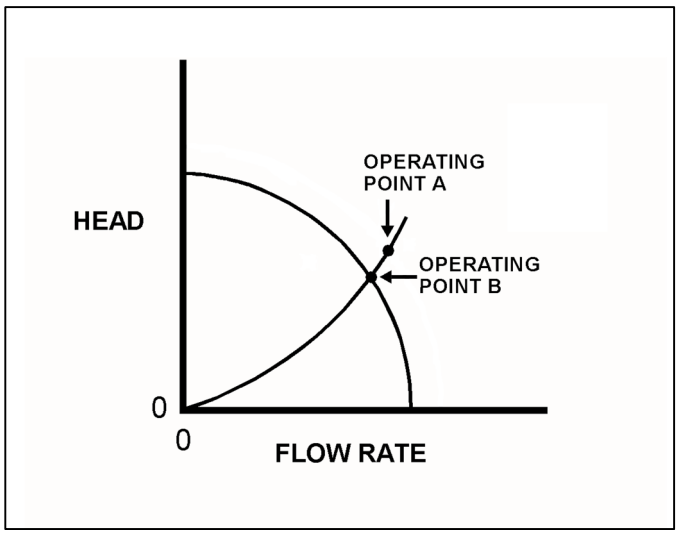

TOPIC: 191004
KNOWLEDGE: K1.14 [2.4/2.5]
QID: P2823 (B2879)

Refer to the drawing of four sets of centrifugal pump and system operating curves (see figure below). Each set of curves shows the results of a change in pump and/or system operating conditions.

Initially, a two-speed centrifugal pump is operating at low speed in a cooling water system and discharging through a heat exchanger. The pump is then switched to high speed.

Which set of operating curves depicts the "before" and "after" conditions described above?

A. 1.

B. 2.

C. 3.

D. 4.

ANSWER: B.

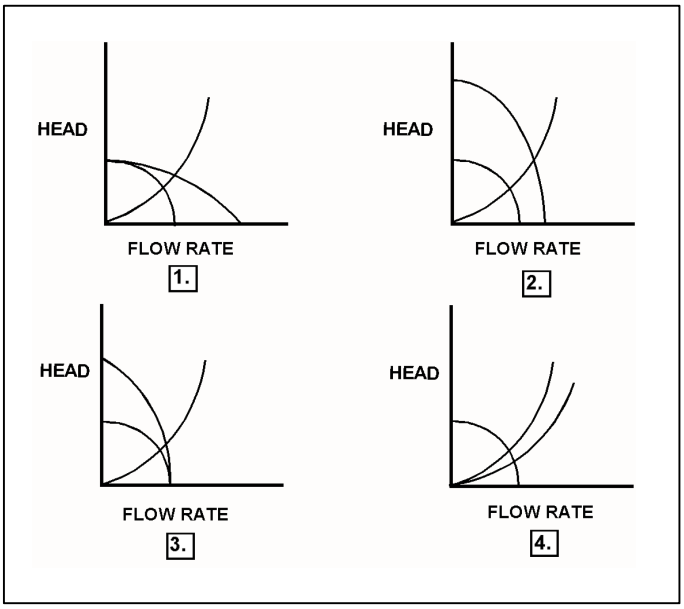

TOPIC: 191004
KNOWLEDGE: K1.14 [2.4/2.5]
QID: P2923 (B3579)

Refer to the drawing of four sets of centrifugal pump and system operating curves (see figure below). Each set of curves shows the results of a change in pump and/or system operating conditions.

Initially, a two-speed centrifugal pump is operating at high speed in a cooling water system and discharging through a heat exchanger. The pump is then switched to low speed.

Which set of operating curves depicts the "before" and "after" conditions described above?

A. 1.

B. 2.

C. 3.

D. 4.

ANSWER: B.

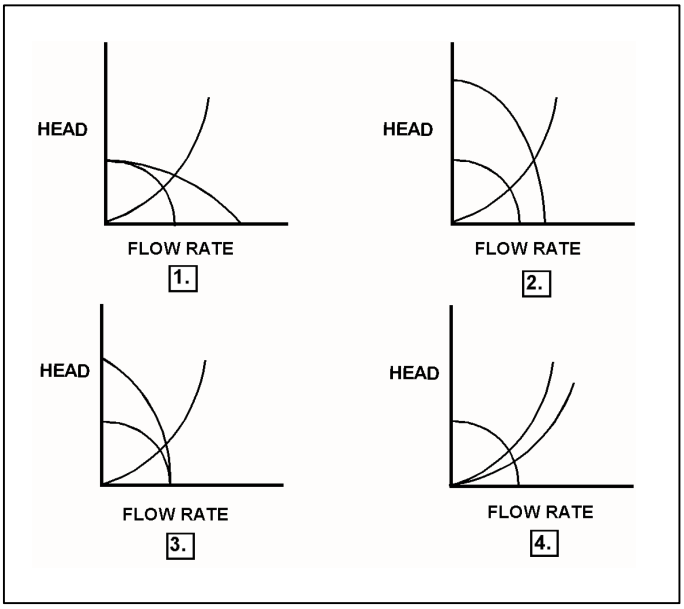

TOPIC: 191004
KNOWLEDGE: K1.14 [2.4/2.5]
QID: P3323 (B1020)

Refer to the drawing of a cooling water system and the associated pump/system operating curves (see figure below). Pumps A and B are identical single-speed centrifugal pumps and initially only pump A is operating.

Pump B is then started. After the system stabilizes, system flow rate will be...

A. the same as the initial flow rate.

B. less than twice the initial flow rate.

C. twice the initial flow rate.

D. more than twice the initial flow rate.

ANSWER: B.

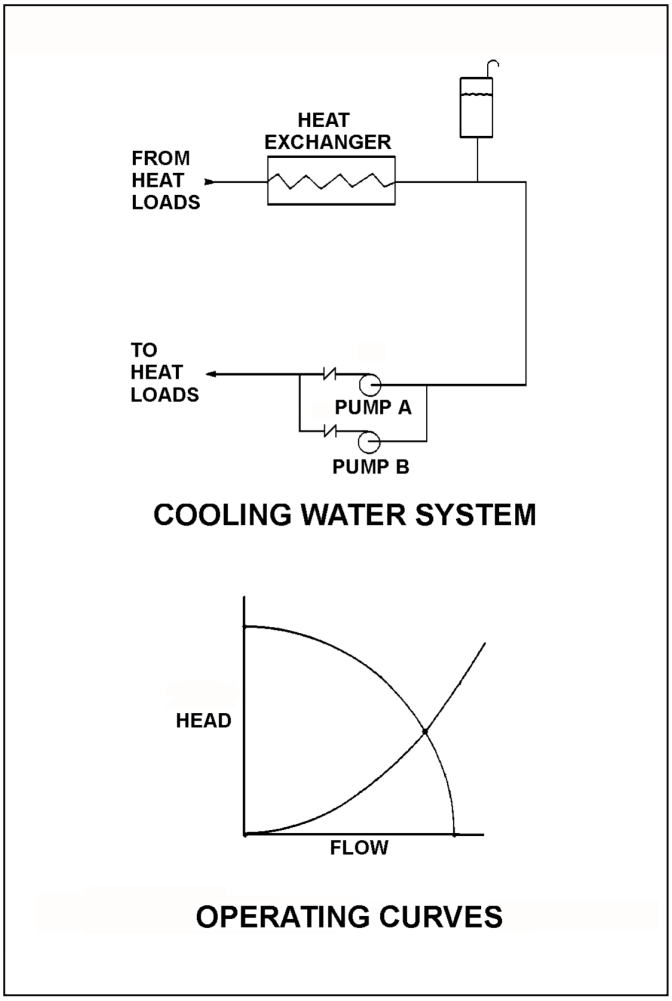

TOPIC: 191004
KNOWLEDGE: K1.14 [2.4/2.5]
QID: P4211 (B4211)

Refer to the drawing of an operating cooling water system (see figure below).

Which one of the following changes to the cooling water system will result in a higher cooling water pump flow rate and a reduced pump discharge head?

A. Increase pump speed by 20 percent.

B. Decrease pump speed by 20 percent.

C. Isolate one of the two in-service heat loads.

D. Place the third system heat load in service.

ANSWER: D.

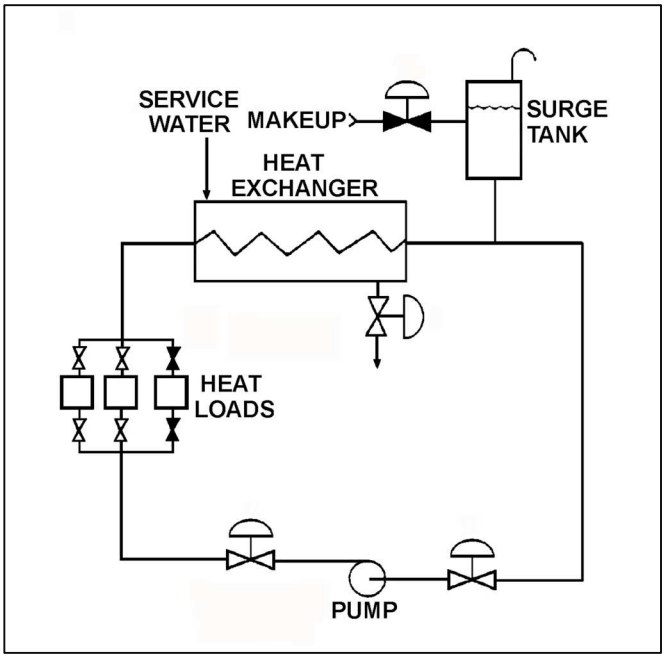

TOPIC: 191004
KNOWLEDGE: K1.14 [2.4/2.5]
QID: P6711 (B6712)

A centrifugal pump is located adjacent to the bottom of an open water storage tank. The pump is taking suction from a river and discharging to the bottom of the tank. Initially the tank was empty and the pump was operating at point B on the drawing below.

When tank water level reaches 30 feet, the new pump operating point will be located on curve _____ closer to point _____. (Assume that no other changes occur in the system.)

A. 1; D

B. 2; A

C. 1; E

D. 2; C

ANSWER: B.

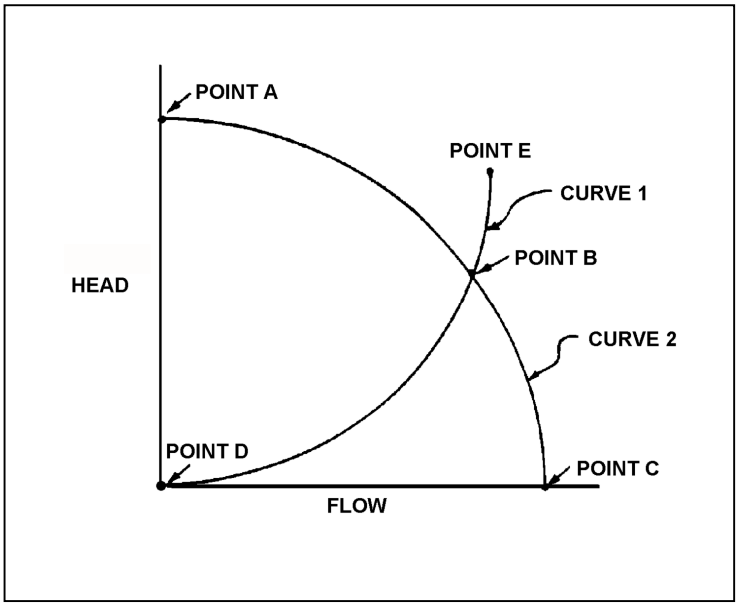

TOPIC: 191004
KNOWLEDGE: K1.14 [2.4/2.5]
QID: P7212 (B7210)

A centrifugal pump is used to provide makeup water to a storage tank that is 30 feet high. The pump is located at the base of the tank. The pump can be aligned to fill the tank via a top connection or a bottom connection using piping of equal lengths and diameters. The tank is currently half full.

With the pump in operation, the pump will have the highest discharge pressure if the pump is aligned to fill the tank via the _____ connection; and the tank will become full in the least amount of time if the pump is aligned to fill the tank via the _____ connection.

A. top; top

B. top; bottom

C. bottom; top

D. bottom; bottom

ANSWER: B.

TOPIC: 191004
KNOWLEDGE: K1.14 [2.4/2.5]
QID: P7310 (B7312)

Refer to the drawing of centrifugal pump and system operating curves (see figure below).

Which one of the following describes the value of head where the two curves cross?

A. The maximum amount of head that the pump can provide.

B. The amount of pump head that is required to avoid cavitation.

C. The amount of pump head that is converted to kinetic energy in the pump.

D. The amount of pump head that is converted to heat and other losses as the water circulates through the system.

ANSWER: D.

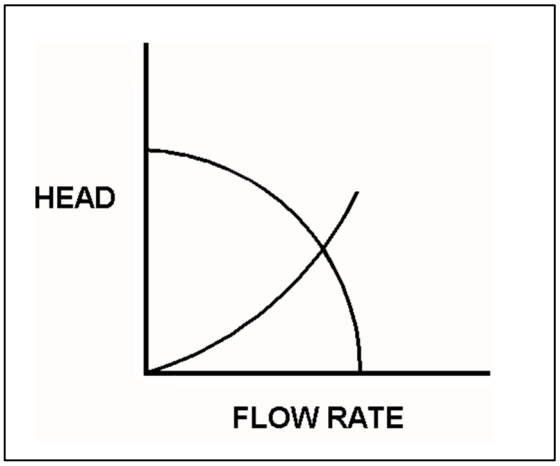

TOPIC: 191004
KNOWLEDGE: K1.14 [2.4/2.5]
QID: P7311 (B7311)

Refer to the drawing of an operating cooling water system (see figure below).

Which one of the following changes to the cooling water system will result in a lower cooling water pump flow rate and a higher pump discharge head?

A. Decrease pump speed by 20 percent.

B. Increase pump speed by 20 percent.

C. Isolate one of the two in-service heat loads.

D. Place the third system heat load in service.

ANSWER: C.

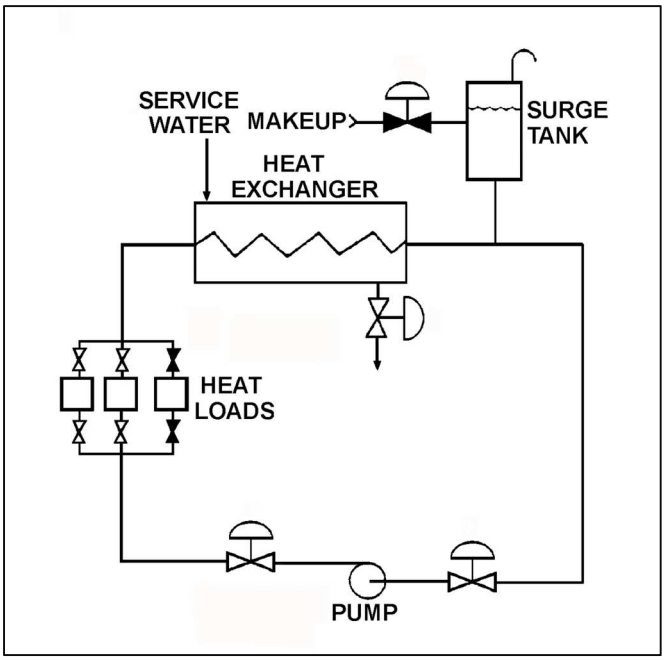

TOPIC: 191004
KNOWLEDGE: K1.14 [2.4/2.5]
QID: P7614 (B7614)

A centrifugal pump is used to provide makeup water to a vented storage tank that is 30 feet high. The pump is located at the base of the tank. The pump can be aligned to fill the tank via a top connection or a bottom connection using piping of equal lengths and diameters. The tank is currently half full.

With the pump in operation, the pump will have the lowest initial discharge pressure if the pump is aligned to fill the tank via the _____ connection; and the tank will require the longest amount of time to become completely full if the pump is aligned to fill the tank via the _____ connection.

A. top; top

B. top; bottom

C. bottom; top

D. bottom; bottom

ANSWER: C.

TOPIC: 191004
KNOWLEDGE: K1.15 [2.5/2.8]
QID: P114 (B2223)

A motor-driven centrifugal pump is operating in an open system with its discharge valve throttled to 50 percent open. If the discharge valve is fully opened, available net positive suction head (NPSH) will _____; and required NPSH will _____.

A. remain the same; increase

B. remain the same; remain the same

C. decrease; increase

D. decrease; remain the same

ANSWER: C.

TOPIC: 191004
KNOWLEDGE: K1.14 [2.4/2.5]
QID: P7604 (B7604

Refer to the pump and system curves (see figure below) for a centrifugal pump operating in a cooling water system.

Operating point A existed when data was taken six months ago. Operating point B is the current operating point. Which one of the following could be responsible for the difference between the operating points?

A. The pump discharge valve was more open when the data was collected for operating point A.

B. The pump discharge valve was more closed when the data was collected for operating point A.

C. The pump was rotating faster when the data was collected for operating point A.

D. The pump was rotating slower when the data was collected for operating point A.

ANSWER: D.

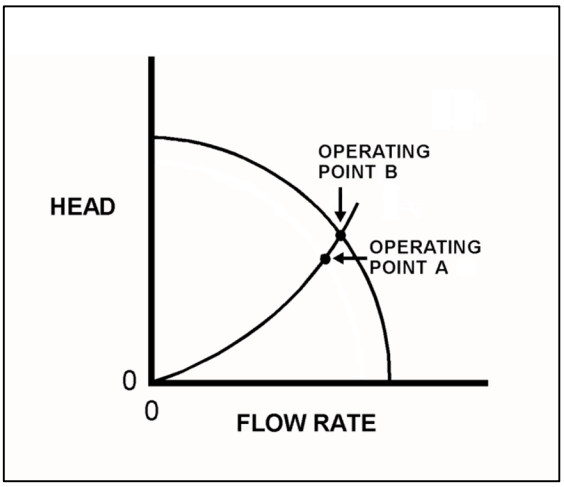

TOPIC: 191004
KNOWLEDGE: K1.15 [2.5/2.8]
QID: P325 (B322)

Increasing the flow rate from a centrifugal pump by throttling open the discharge valve will cause pump head to...

A. increase and stabilize at a higher value.

B. decrease and stabilize at a lower value.

C. remain constant because pump head is a design parameter.

D. increase, then decrease following the pump's efficiency curve.

ANSWER: B.

TOPIC: 191004
KNOWLEDGE: K1.15 [2.5/2.8]
QID: P724 (B723)

A centrifugal pump is operating normally in an open system. If the pump recirculation valve is opened farther, pump discharge pressure will _____; and pump flow rate will _____.

A. increase; decrease

B. decrease; increase

C. increase; increase

D. decrease; decrease

ANSWER: B.

TOPIC: 191004
KNOWLEDGE: K1.15 [2.5/2.8]
QID: P1421 (B1421)

A centrifugal pump is operating normally in an open system with all valves fully open. If the pump discharge valve is throttled to 50 percent, pump suction pressure will _____; and pump discharge pressure will _____.

A. increase; decrease

B. decrease; increase

C. increase; increase

D. decrease; decrease

ANSWER: C.

TOPIC: 191004
KNOWLEDGE: K1.15 [2.5/2.8]
QID: P2025 (B2019)

A variable-speed centrifugal pump is operating at rated speed in an open system. If the pump speed is decreased by 50 percent, available net positive suction head (NPSH) will _____; and required NPSH will _____.

A. increase; decrease

B. increase; remain the same

C. decrease; decrease

D. decrease; remain the same

ANSWER: A.

TOPIC: 191004
KNOWLEDGE: K1.15 [2.5/2.8]
QID: P2224 (B521)

A motor-driven centrifugal pump is operating in an open system with its discharge valve throttled to 50 percent. How will the pump be affected if the discharge valve is fully opened?

A. Total developed head decreases, and motor current decreases.

B. Total developed head increases, and available net positive suction head decreases.

C. The potential for pump cavitation decreases, and pump differential pressure decreases.

D. Available net positive suction head decreases, and pump differential pressure decreases.

ANSWER: D.

TOPIC: 191004
KNOWLEDGE: K1.15 [2.5/2.8]
QID: P2424 (B2420)

A variable speed motor-driven centrifugal pump is operating at 50 percent speed in an open system. If the pump speed is increased to 100 percent, available net positive suction head (NPSH) will _____; and required NPSH will _____.

A. increase; remain the same

B. increase; increase

C. decrease; remain the same

D. decrease; increase

ANSWER: D.

TOPIC: 191004
KNOWLEDGE: K1.15 [2.5/2.8]
QID: P2624 (B2622)

Which one of the following describes a reason for designing centrifugal pumps with suction nozzles that are larger than their discharge nozzles?

A. Increases total pump head by increasing the velocity head at the suction of the pump.

B. Increases the differential pressure across the pump by decreasing pump head loss.

C. Increases pump available net positive suction head by decreasing head loss at the pump suction.

D. Increases pump capacity by decreasing turbulence at the suction of the pump.

ANSWER: C.

TOPIC: 191004
KNOWLEDGE: K1.15 [2.6/2.8]
QID: P3623 (B3623)

A centrifugal firewater pump is operating to pressurize a fire main. The pump takes suction on a water reservoir. The reservoir water level and the eye of the pump impeller are both at sea level.

Given:

- The pump has a design shutoff head of 100 feet.
- The required net positive suction head (NPSH) for the pump is 15 feet.
- The reservoir water temperature is 60°F.
- A fire hose connected to the fire main is being used to suppress an elevated fire.

At which one of the following fire hose spray nozzle elevations (referenced to sea level) will the pump first be <u>unable</u> to provide flow? (Disregard head loss in the fire main and fire hose.)

A. 86 feet

B. 101 feet

C. 116 feet

D. 135 feet

ANSWER: B.

TOPIC: 191004
KNOWLEDGE: K1.15 [2.5/2.8]
QID: P3912 (B3911)

A centrifugal firewater pump is operating to pressurize a fire main. The pump takes suction from a water reservoir. A fire hose connected to the fire main is being used to suppress an elevated fire.

Given:

- The eye of the pump impeller is located 5 feet above the reservoir water level.
- The pump has a design shutoff head of 120 feet.
- The required net positive suction head (NPSH) for the pump is 15 feet.
- The reservoir water temperature is 60°F.

At which one of the following elevations above the eye of the pump impeller will the fire hose spray nozzle first be unable to provide flow? (Disregard all sources of head loss.)

A. 111 feet

B. 116 feet

C. 121 feet

D. 126 feet

ANSWER: B.

TOPIC: 191004
KNOWLEDGE: K1.15 [2.5/2.8]
QID: P4313 (B4312)

A centrifugal firewater pump is operating to pressurize a fire main. The pump takes suction from a vented water storage tank. A fire hose connected to the fire main is being used to suppress an elevated fire.

Given:

- The eye of the pump impeller is located 30 feet below the tank water level.
- The pump has a design shutoff head of 120 feet.
- The required net positive suction head (NPSH) for the pump is 15 feet.
- The tank water temperature is 60°F.

At which one of the following elevations above the eye of the pump impeller will the fire hose spray nozzle first be <u>unable</u> to provide flow? (Disregard all sources of head loss.)

A. 106 feet

B. 121 feet

C. 136 feet

D. 151 feet

ANSWER: D.

TOPIC: 191004
KNOWLEDGE: K1.15 [2.5/2.8]
QID: P4712 (B4710)

A centrifugal cooling water pump is operating in an open system with its discharge valve fully open. If the discharge valve is repositioned to 50 percent open, the pump's available net positive suction head (NPSH) will _____; and the pump's required NPSH will _____.

A. remain the same; decrease

B. remain the same; remain the same

C. increase; decrease

D. increase; remain the same

ANSWER: C.

TOPIC: 191004
KNOWLEDGE: K1.15 [2.5/2.8]
QID: P4912 (B4911)

A centrifugal firewater pump is operating to pressurize a fire main. The pump takes suction from a water reservoir. A fire hose connected to the fire main is being used to suppress an elevated fire.

Given:

- The eye of the pump impeller is located 15 feet below the reservoir water level.
- The pump has a design shutoff head of 120 feet.
- The required net positive suction head (NPSH) for the pump is 15 feet.
- The reservoir water temperature is 60°F.

At which one of the following elevations above the reservoir water level will the fire hose spray nozzle first be <u>unable</u> to provide flow? (Disregard all sources of head loss.)

A. 91 feet

B. 106 feet

C. 121 feet

D. 136 feet

ANSWER: C.

TOPIC: 191004
KNOWLEDGE: K1.15 [2.5/2.8]
QID: P5412 (B5412)

A motor-driven centrifugal pump is operating in a closed-loop cooling water system and is unable to achieve its rated volumetric flow rate due to cavitation. Which one of the following will enable the pump to achieve a higher volumetric flow rate before cavitation occurs?

A. Operate the system at a higher pressure.

B. Operate the system at a higher temperature.

C. Remove the existing pump motor and install a motor with a higher horsepower rating.

D. Remove the existing pump and install a same-capacity pump with a higher minimum required net positive suction head rating.

ANSWER: A.

TOPIC: 191004
KNOWLEDGE: K1.15 [2.5/2.8]
QID: P5712 (B5712)

Refer to the graph that represents the head-capacity characteristics for a single-speed centrifugal cooling water pump (see figure below).

Which one of the following lists a pair of parameters that could be represented by curves A and B? (Note: NPSH is net positive suction head.)

	Curve A	Curve B
A.	Pump Head	Available NPSH
B.	Available NPSH	Required NPSH
C.	Required NPSH	System Head Loss
D.	System Head Loss	Pump Head

ANSWER: B.

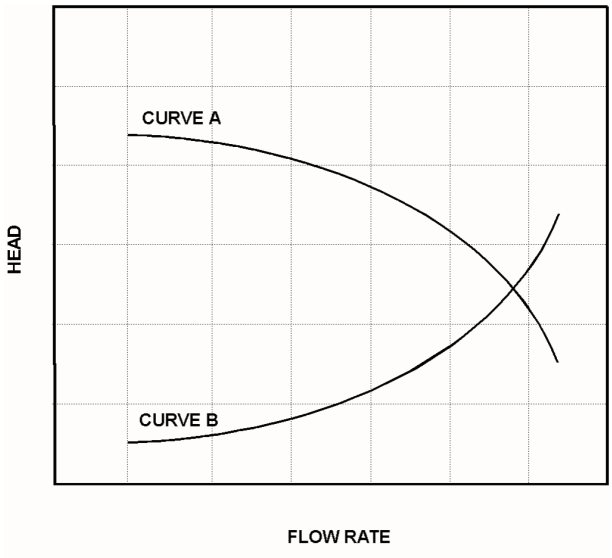

TOPIC: 191004
KNOWLEDGE: K1.15 [2.5/2.8]
QID: P5813 (B5812)

Centrifugal pumps A and B are identical except that pump A uses a single-suction impeller while pump B uses a double-suction impeller. If both pumps are pumping water at the same inlet temperature, inlet pressure, and flow rate, single-suction pump A typically will have the _____ impeller axial thrust and the _____ required net positive suction head.

A. greater; greater

B. greater; smaller

C. smaller; greater

D. smaller; smaller

ANSWER: A.

TOPIC: 191004
KNOWLEDGE: K1.15 [2.5/2.8]
QID: P6512 (B6511)

A motor-driven centrifugal pump is operating normally in a closed cooling water system. When the pump discharge flow control valve is opened further, the pump is unable to provide the desired volumetric flow rate due to cavitation. Which one of the following will enable a higher pump volumetric flow rate before cavitation occurs?

A. Remove the existing motor and install a motor with a lower horsepower rating.

B. Remove the existing motor and install a motor with a higher horsepower rating.

C. Remove the existing pump and install a same-capacity pump with a lower minimum net positive suction head requirement.

D. Remove the existing pump and install a same-capacity pump with a higher minimum net positive suction head requirement.

ANSWER: C.

TOPIC: 191004
KNOWLEDGE: K1.15 [2.5/2.8]
QID: P6613

A nuclear power plant is shut down with core decay heat being removed by the residual heat removal (RHR) system. The reactor coolant system (RCS) has been drained to a mid-loop water level of 20 inches in both the hot and cold legs. The operating RHR pump is taking suction from a hot leg and discharging 3,000 gpm to a cold leg.

A loss of RHR flow rate due to vortexing will become more likely if the water level in the hot leg is _____ by six inches or if the RHR system flow rate is _____ by 500 gpm.

A. raised; decreased

B. raised; increased

C. lowered; decreased

D. lowered; increased

ANSWER: D.

TOPIC: 191004
KNOWLEDGE: K1.15 [2.5/2.8]
QID: P7012 (B7012)

Refer to the drawing of an operating cooling water system (see figure below).

The pump is unable to achieve its rated volumetric flow rate due to cavitation. Which one of the following will enable the pump to achieve a higher volumetric flow rate before cavitation occurs?

A. Decrease the service water flow rate.

B. Operate the system at a lower pressure.

C. Move the surge tank connection closer to the suction of the pump.

D. Remove the existing pump motor and install a motor with a higher horsepower rating.

ANSWER: C.

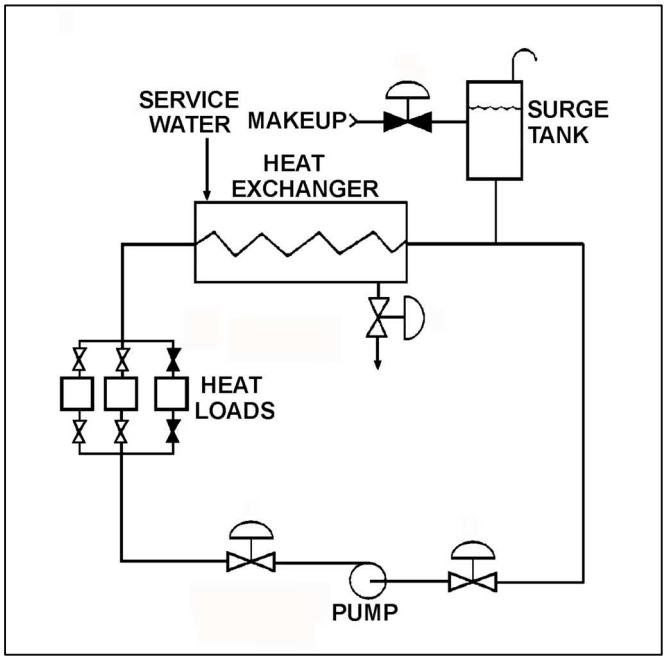

TOPIC: 191004
KNOWLEDGE: K1.15 [2.5/2.8]
QID: P7412 (B7411)

Refer to the drawing of an operating cooling water system (see figure below). The pump discharge valve is partially throttled to produce the following initial pump operating parameters:

Pump discharge pressure = 45 psig
Pump suction pressure = 15 psig
Pump flow rate = 120 gpm

After a few hours of operation, the current pump operating parameters are as follows:

Pump discharge pressure = 48 psig
Pump suction pressure = 18 psig
Pump flow rate: = 120 gpm

Which one of the following could be responsible for the change in pump operating parameters?

A. The pump speed increased with no other changes to the system.

B. The surge tank level increased with no other changes to the system.

C. The pump discharge valve was closed further while pump speed increased.

D. The pump discharge valve was closed further while surge tank level increased.

ANSWER: B.

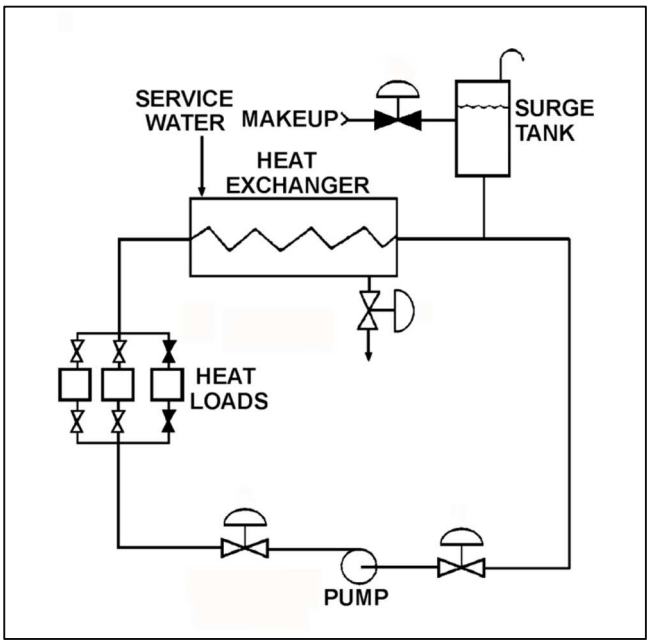

TOPIC: 191004
KNOWLEDGE: K1.15 [2.5/2.8]
QID: P7634 (B7634)

Refer to the drawing of an operating cooling water system (see figure below).

The pump is unable to achieve its rated volumetric flow rate due to cavitation. Which one of the following will enable the pump to achieve a higher volumetric flow rate before cavitation occurs?

A. Decrease the surge tank water level.

B. Increase the service water flow rate to the heat exchanger.

C. Move the surge tank connection closer to the discharge of the pump.

D. Remove the existing pump motor and install a motor with a higher horsepower rating.

ANSWER: B.

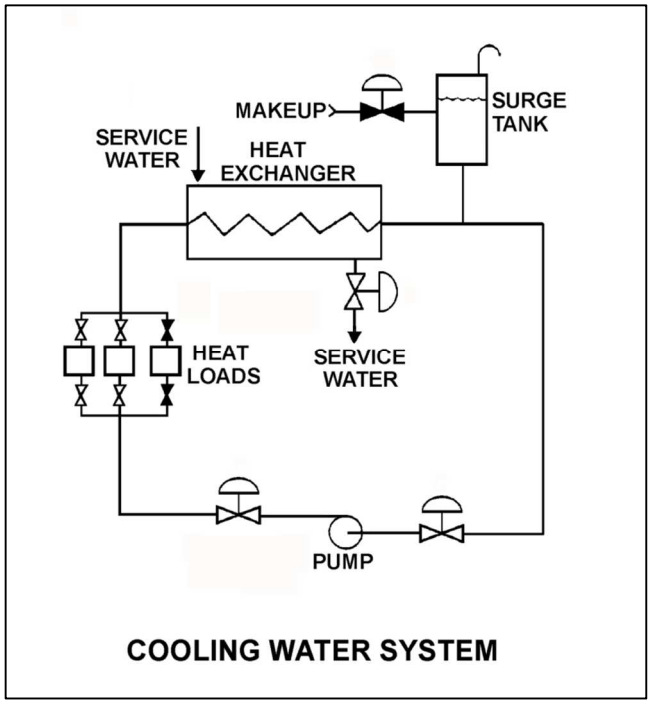

TOPIC: 191004
KNOWLEDGE: K1.15 [2.5/2.8]
QID: P7674 (B7674)

Refer to the drawing of an operating cooling water system (see figure below).

How will the centrifugal pump flow rate be affected if the surge tank level decreases from 8 feet to 4 feet? (Assume the pump maintains adequate net positive suction head.)

A. Pump flow rate will increase.

B. Pump flow rate will decrease.

C. Pump flow rate will remain the same.

D. Cannot be determined without additional information.

ANSWER: C.

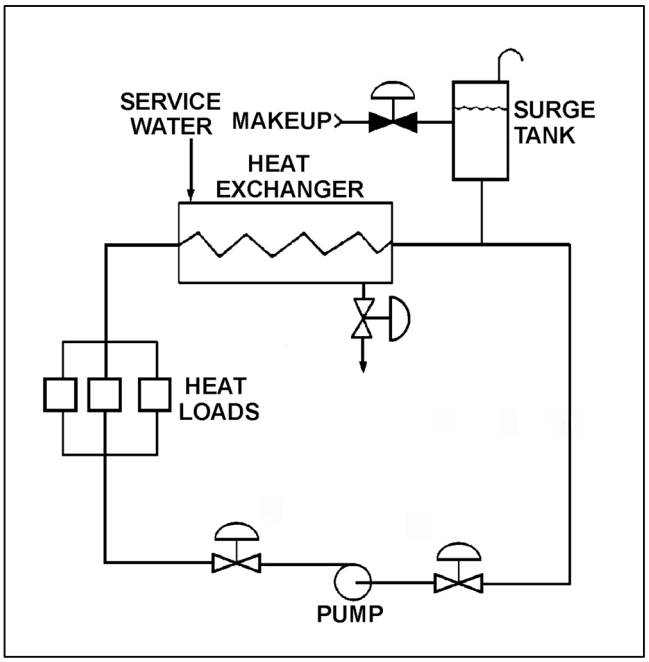

TOPIC: 191004
KNOWLEDGE: K1.15 [2.5/2.8]
QID: P7705

A reactor is shutdown with decay heat being removed by the residual heat removal (RHR) system. The operating RHR pump is taking suction from the bottom of a reactor coolant system (RCS) hot leg and discharging to a cold leg. The RCS has been drained to a mid-loop water level in the hot legs. Which one of the following makes vortexing at the RHR suction piping hot leg connection more likely?

A. RCS pressure is decreased from 100 psia to 50 psia.

B. RCS pressure is increased from 100 psia to 150 psia.

C. RHR pump flow rate is increased from 1,000 gpm to 1,250 gpm.

D. Water level in the hot leg is increased from 16 inches to 20 inches.

ANSWER: C.

TOPIC: 191004
KNOWLEDGE: K1.16 [2.8/2.9]
QID: P624

Which one of the following specifies the proper pump discharge valve position and the basis for that position when starting a large motor-driven radial-flow centrifugal pump?

A. Discharge valve fully open to reduce motor power requirements.

B. Discharge valve throttled to reduce motor power requirements.

C. Discharge valve fully open to ensure adequate pump net positive suction head.

D. Discharge valve throttled to ensure adequate pump net positive suction head.

ANSWER: B.

TOPIC: 191004
KNOWLEDGE: K1.16 [2.8/2.9]
QID: P1725 (B1722)

A typical single-stage radial-flow centrifugal pump is being returned to service following maintenance on its three-phase AC induction motor. Which one of the following will occur when the pump is started if two of the three motor power leads were inadvertently swapped during restoration?

A. The motor breaker will trip on instantaneous overcurrent.

B. The motor will not turn and will emit a humming sound.

C. The pump will rotate in the reverse direction with reduced or no flow rate.

D. The pump will rotate in the normal direction with reduced flow rate.

ANSWER: C.

TOPIC: 191004
KNOWLEDGE: K1.20 [2.8/2.8]
QID: P25

If the speed of a positive displacement pump is increased, the available net positive suction head will _____; and the pump will operate _____ cavitation.

A increase; closer to

B. decrease; further from

C. increase; further from

D. decrease; closer to

ANSWER: D.

TOPIC: 191004
KNOWLEDGE: K1.20 [2.8/2.8]
QID: P226

An increase in positive displacement pump speed will cause the available net positive suction head for the pump to...

A. decrease, due to the increase in fluid flow rate.

B. decrease, due to the increase in fluid discharge pressure.

C. increase, due to the increase in fluid discharge pressure.

D. increase, due to the increase in fluid flow rate.

ANSWER: A.

TOPIC: 191004
KNOWLEDGE: K1.20 [2.8/2.8]
QID: P1025

The minimum required net positive suction head for a typical positive displacement pump will increase the most if the pump...

A. speed increases from 1,200 rpm to 1,600 rpm.

B. discharge pressure decreases from 100 psig to 50 psig.

C. suction temperature increases from 75°F to 85°F.

D. discharge valve is positioned from 90 percent open to fully open.

ANSWER: A.

TOPIC: 191004
KNOWLEDGE: K1.21 [3.0/3.1]
QID: P1425 (B1125)

Which one of the following describes the proper location for a relief valve that will be used to prevent exceeding the design pressure of a positive displacement pump and associated piping?

A. On the pump suction piping upstream of the suction isolation valve.

B. On the pump suction piping downstream of the suction isolation valve.

C. On the pump discharge piping upstream of the discharge isolation valve.

D. On the pump discharge piping downstream of the discharge isolation valve.

ANSWER: C.

TOPIC: 191004
KNOWLEDGE: K1.22 [2.3/2.5]
QID: P326 (B323)

A positive displacement pump (PDP) is operating in an open system. PDP parameters are as follows:

PDP speed	=	1,000 rpm
PDP discharge pressure	=	2,000 psig
PDP suction pressure	=	50 psig
PDP flow rate	=	150 gpm

Which one of the following changes will cause PDP flow rate to exceed 200 gpm?

A. A second identical discharge path is opened.

B. PDP speed is increased to 1,500 rpm.

C. PDP suction pressure is increased to 120 psig.

D. Downstream system pressure is decreased to 1,000 psig.

ANSWER: B.

TOPIC: 191004
KNOWLEDGE: K1.22 [2.3/2.5]
QID: P826 (B1123)

If the fully open discharge valve of a reciprocating positive displacement pump is closed approximately 10 percent, pump flow rate will _____; and pump head will _____. (Assume "ideal" pump response.)

A. decrease; increase

B. remain constant; increase

C. decrease; remain constant

D. remain constant; remain constant

ANSWER: B.

TOPIC: 191004
KNOWLEDGE: K1.22 [2.3/2.5]
QID: P925

A variable-speed positive displacement pump is operating at 100 rpm with a flow rate of 60 gpm in an open system. To decrease pump flow rate to 30 gpm, pump speed must be decreased to approximately...

A. 25 rpm.

B. 35 rpm.

C. 50 rpm.

D. 71 rpm.

ANSWER: C.

TOPIC: 191004
KNOWLEDGE: K1.22 [2.3/2.5]
QID: P1026

Which one of the following conditions will result in the greatest increase in volumetric flow rate through a positive displacement pump?

A. Doubling the pump speed.

B. Doubling the pump net positive suction head.

C. Reducing the downstream system pressure by one-half.

D. Positioning the discharge valve from half open to fully open.

ANSWER: A.

TOPIC: 191004
KNOWLEDGE: K1.22 [2.3/2.5]
QID: P1126

Which one of the following describes single-speed pump operating characteristics?

A. Centrifugal pumps deliver a variety of flow rates at a constant head.

B. Centrifugal pumps deliver a constant head over a variety of flow rates.

C. Positive displacement pumps deliver a variety of flow rates at a constant head.

D. Positive displacement pumps deliver a constant flow rate over a variety of heads.

ANSWER: D.

TOPIC: 191004
KNOWLEDGE: K1.22 [2.3/2.5]
QID: P1526 (B1525)

A positive displacement pump (PDP) is operating in an open water system. PDP parameters are as follows:

PDP speed	=	480 rpm
PDP discharge pressure	=	1,000 psig
PDP suction pressure	=	10 psig
PDP flow rate	=	60 gpm

Which one of the following changes will cause PDP flow rate to exceed 100 gpm?

A. A second identical discharge path is opened.

B. PDP speed is increased to 900 rpm.

C. PDP suction pressure is increased to 40 psig.

D. Downstream system pressure is decreased to 500 psig.

ANSWER: B.

TOPIC: 191004
KNOWLEDGE: K1.22 [2.3/2.5]
QID: P1726 (B1919)

An ideal (no slip) reciprocating positive displacement pump is operating to provide makeup water to a reactor coolant system that is being maintained at 1,000 psig. The discharge valve of the pump was found to be throttled to 80 percent open.

If the valve is subsequently fully opened, pump flow rate will _____; and pump head will _____.

A. increase; decrease

B. remain constant; decrease

C. increase; remain constant

D. remain constant; remain constant

ANSWER: B.

TOPIC: 191004
KNOWLEDGE: K1.22 [2.3/2.5]
QID: P2126 (B1824)

A variable-speed positive displacement pump is operating at 100 rpm with a flow rate of 60 gpm in an open system. To decrease pump flow rate to 25 gpm, pump speed must be decreased to approximately...

A. 17 rpm.

B. 33 rpm.

C. 42 rpm.

D. 62 rpm.

ANSWER: C.

TOPIC: 191004
KNOWLEDGE: K1.22 [2.3/2.5]
QID: P2526 (B2525)

Which one of the following will result in the greatest increase in volumetric flow rate to a system that is currently receiving flow from a positive displacement pump operating at 400 rpm with a discharge pressure of 100 psig?

A. Increase pump speed to 700 rpm.

B. Reduce system pressure to decrease pump discharge pressure to 40 psig.

C. Start a second identical positive displacement pump in series with the first.

D. Start a second identical positive displacement pump in parallel with the first.

ANSWER: D.

TOPIC: 191004
KNOWLEDGE: K1.22 [2.3/2.5]
QID: P2626 (B2624)

A section of pipe is being hydrostatically tested to 1,400 psig using a positive displacement pump. The operating characteristics of the positive displacement pump are shown in the drawing below.

Which one of the following could cause the observed difference between the expected and the actual pump performance?

A. Pump internal leakage is greater than expected.

B. Pipe section boundary valve leakage is greater than expected.

C. A relief valve on the pump discharge piping opened prior to its setpoint of 1,400 psig.

D. Available NPSH decreased more than expected, but remains slightly above required NPSH.

ANSWER: A.

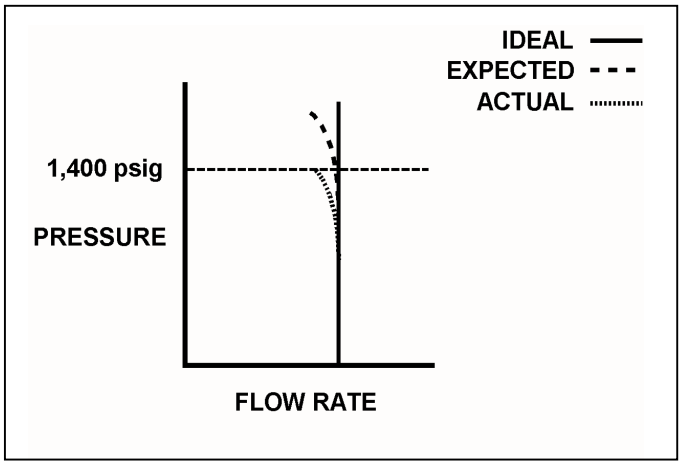

TOPIC: 191004
KNOWLEDGE: K1.22 [2.3/2.5]
QID: P2726 (B2724)

Which one of the following conditions will result in the greatest increase in volumetric flow rate from a positive displacement pump operating at 300 rpm and a discharge pressure of 100 psig?

A. Increasing pump speed to 700 rpm.

B. Decreasing pump discharge pressure to 30 psig.

C. Starting a second identical positive displacement pump in series with the first.

D. Starting a second identical positive displacement pump in parallel with the first.

ANSWER: A.

TOPIC: 191004
KNOWLEDGE: K1.22 [2.3/2.5]
QID: P2926 (B2925)

An ideal (no slip) reciprocating positive displacement pump is operating in an open system to provide makeup water to a coolant system that is being maintained at 800 psig. The discharge valve of the pump is full open.

If the pump discharge valve is subsequently throttled to 80 percent open, pump flow rate will _____; and pump head will _____.

A. decrease; increase

B. decrease; remain constant

C. remain constant; increase

D. remain constant; remain constant

ANSWER: C.

TOPIC: 191004
KNOWLEDGE: K1.22 [2.3/2.5]
QID: P3024 (B3025)

A pump is needed to supply fuel oil from a day tank to a diesel engine fuel injection system. The pump must maintain a nearly constant flow rate with a minimum of discharge pressure fluctuations as system pressure varies between 200 psig and 1,900 psig.

Which one of the following types of pumps would typically be used in this application?

A. Axial-flow centrifugal

B. Radial-flow centrifugal

C. Rotary positive displacement

D. Reciprocating positive displacement

ANSWER: C.

TOPIC: 191004
KNOWLEDGE: K1.22 [2.3/2.5]
QID: P3525 (B1680)

An ideal positive displacement pump is pumping to a system operating at 100 psig. Assume pump speed is constant, zero pump slip, and pump backpressure remains within normal pump operating limits.

If system pressure increases to 200 psig, the pump head will _____; and pump flow rate will _____.

A. increase; remain the same

B. increase; decrease

C. remain the same; remain the same

D. remain the same; decrease

ANSWER: A.

TOPIC: 191004
KNOWLEDGE: K1.22 [2.3/2.5]
QID: P5012 (B5013)

Use the following drawing of system and pump operating curves for a positive displacement pump with discharge relief valve protection to answer the following question.

A positive displacement pump is initially supplying water at 40 gpm with a pump discharge pressure of 400 psia. If pump speed is increased until pump flow rate is 80 gpm, what is the new pump discharge pressure?

A. 800 psia

B. 1,000 psia

C. 1,200 psia

D. 1,600 psia

ANSWER: B.

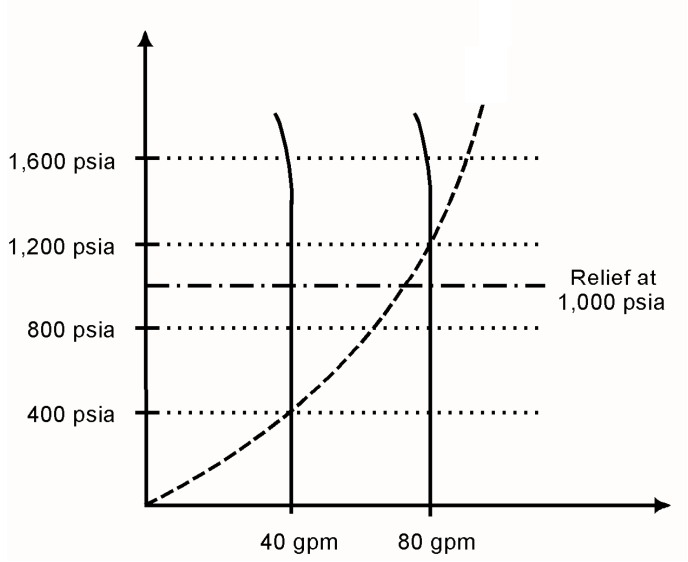

TOPIC: 191004
KNOWLEDGE: K1.22 [2.3/2.5]
QID: P5313 (B5313)

Use the following drawing of system and pump operating curves for an operating positive displacement pump with relief valve protection to answer the following question.

A positive displacement pump is initially supplying water at 40 gpm with a pump discharge pressure of 200 psia. If pump speed is increased until pump flow rate is 80 gpm, what is the new pump discharge pressure?

A. 400 psia

B. 800 psia

C. 1,000 psia

D. 1,600 psia

ANSWER: B.

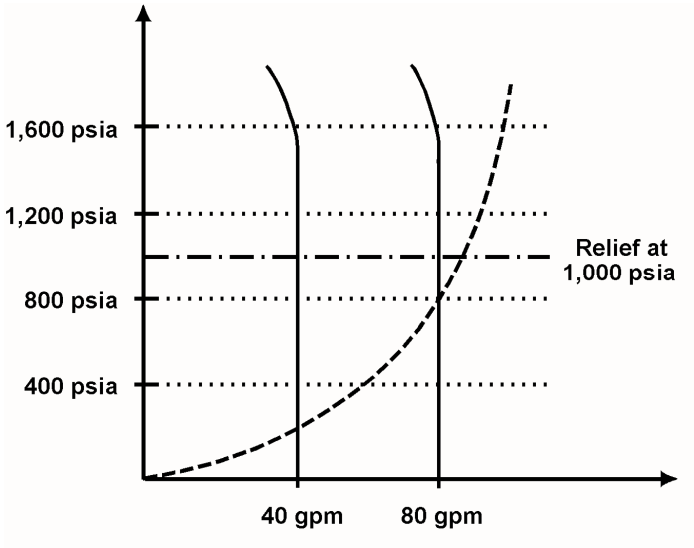

TOPIC: 191004
KNOWLEDGE: K1.22 [2.3/2.5]
QID: P7675 (B7675)

Refer to the drawing of an operating curve for a positive displacement pump in a closed water system (see figure below).

Which one of the following describes the value of the head where the two curves cross?

A. The maximum amount of head that the pump can provide.

B. The amount of pump head that is required to avoid cavitation.

C. The amount of pump head that is converted to kinetic energy in the pump.

D. The amount of pump head that is converted to heat as the water circulates through the system.

ANSWER: D.

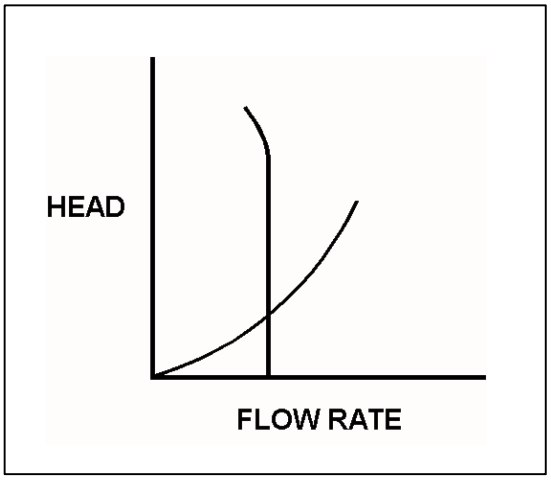

TOPIC: 191004
KNOWLEDGE: K1.23 [2.8/2.9]
QID: P526

When starting a positive displacement pump, why must the pump discharge valve be fully open?

A. Prevents pump cavitation.

B. Reduces motor starting current.

C. Minimizes the potential for water hammer.

D. Ensures integrity of the pump and system piping.

ANSWER: D.

TOPIC: 191004
KNOWLEDGE: K1.24 [3.0/3.1]
QID: P626 (B2425)

What is the purpose of the relief valve located between the pump outlet and the discharge isolation valve of many positive displacement pumps?

A. Protect the pump and suction piping from overpressure if the discharge valve is open during system startup.

B. Protect the pump and suction piping from overpressure if the suction valve is closed during pump operation.

C. Protect the pump and discharge piping from overpressure if the discharge valve is closed during pump operation.

D. Protect the pump and discharge piping from overpressure due to thermal expansion of pump contents when the pump is stopped with its suction valve closed.

ANSWER: C.

TOPIC: 191004
KNOWLEDGE: K1.24 [3.0/3.1]
QID: P1722 (B1724)

A positive displacement pump should be started with its suction valve _____ and its discharge valve _____.

A. throttled; throttled

B. throttled; fully open

C. fully open; throttled

D. fully open; fully open

ANSWER: D.

TOPIC: 191004
KNOWLEDGE: K1.24 [3.0/3.1]
QID: P1923 (B525)

A positive displacement pump should be started with its suction valve _____ and its discharge valve _____.

A. closed; closed

B. closed; open

C. open; closed

D. open; open

ANSWER: D.

TOPIC: 191005
KNOWLEDGE: K1.01 [2.8/3.1]
QID: P26

If a reactor coolant pump (RCP) rotor seizes, RCP motor current will _____; and if the rotor shears, RCP motor speed will _____.

A. increase, increase

B. increase, decrease

C. decrease, increase

D. decrease, decrease

ANSWER: A.

TOPIC: 191005
KNOWLEDGE: K1.01 [2.8/3.1]
QID: P227

A nuclear power plant is operating at steady-state 80 percent power when a reactor coolant pump (RCP) shaft seizes. Which one of the following indications would <u>not</u> accompany the seized shaft?

A. Reactor coolant system pressure transient.

B. Decreased flow rate in the associated reactor coolant loop.

C. Decreased flow rate in the remaining reactor coolant loop(s).

D. Increased current to the affected RCP with possible breaker trip.

ANSWER: C.

TOPIC: 191005
KNOWLEDGE: K1.01 [2.8/3.1]
QID: P327

A nuclear power plant is operating at steady-state 100 percent power when a reactor coolant pump (RCP) malfunction occurs. Thirty seconds after the malfunction, which one of the following can be used by an operator to determine whether the malfunction is a locked RCP rotor or a sheared RCP rotor? (Assume no operator action is taken.)

A. Reactor trip status

B. Loop flow indications

C. RCP ammeter indications

D. Loop differential temperature indications

ANSWER: C.

TOPIC: 191005
KNOWLEDGE: K1.01 [2.8/3.1]
QID: P1127

During a reactor coolant pump (RCP) locked rotor event, RCP motor current will...

A. increase due to the increased rotor torque.

B. increase due to the increased counter electromotive force (CEMF) in the stator.

C. decrease due to the decreased pump flow rate.

D. decrease due to the increased CEMF in the rotor.

ANSWER: A.

TOPIC: 191005
KNOWLEDGE: K1.01 [2.8/3.1]
QID: P1427 (B2626)

A motor-driven cooling water pump is operating normally. How will pump motor current respond if the pump experiences a locked rotor?

A. Decreases immediately to zero due to breaker trip.

B. Decreases immediately to no-load motor amps.

C. Increases immediately to many times running current, then decreases to no-load motor amps.

D. Increases immediately to many times running current, then decreases to zero upon breaker trip.

ANSWER: D.

TOPIC: 191005
KNOWLEDGE: K1.01 [2.8/3.1]
QID: P2127 (B1326)

A cooling water pump is being driven by an AC induction motor. Which one of the following describes how and why pump motor current will change if the pump shaft seizes?

A. Decreases due to decreased pump flow.

B. Decreases due to increased counter electromotive force.

C. Increases due to decreased pump flow.

D. Increases due to decreased counter electromotive force.

ANSWER: D.

TOPIC: 191005
KNOWLEDGE: K1.01 [2.8/3.1]
QID: P3127 (B2826)

A motor-driven centrifugal pump exhibits indications of pump failure while being started in an idle cooling water system. Assuming the pump motor breaker does not trip, which one of the following pairs of indications would be observed if the failure is a locked pump shaft?

A. Lower than normal running current with zero system flow rate.

B. Lower than normal running current with a fraction of normal system flow rate.

C. Excessive duration of peak starting current with zero system flow rate.

D. Excessive duration of peak starting current with a fraction of normal system flow rate.

ANSWER: C.

TOPIC: 191005
KNOWLEDGE: K1.01 [2.8/3.1]
QID: P5914 (B5914)

When a motor-driven centrifugal pump was started, the motor ammeter reading immediately increased to, and stabilized at, many times the normal operating value. Which one of the following describes a possible cause for the ammeter response?

A. The pump was started with a fully closed discharge valve.

B. The pump was started with a fully open discharge valve.

C. The pump shaft seized upon start and did not rotate.

D. The pump shaft separated from the motor shaft upon start.

ANSWER: C.

TOPIC: 191005
KNOWLEDGE: K1.02 [2.8/2.9]
QID: P27

If the generator bearings on a motor-generator set begin to overheat from excessive friction, which one of the following will occur?

A. Generator current will begin to increase.

B. Generator windings will begin to heat up.

C. Motor current will begin to decrease.

D. Motor windings will begin to heat up.

ANSWER: D.

TOPIC: 191005
KNOWLEDGE: K1.02 [2.8/2.9]
QID: P344 (B340)

A thermal overload device for a large motor protects the motor from...

A. sustained overcurrent by opening the motor breaker or motor line contacts.

B. sustained overcurrent by opening contacts in the motor windings.

C. instantaneous overcurrent by opening the motor breaker or motor line contacts.

D. instantaneous overcurrent by opening contacts in the motor windings.

ANSWER: A.

TOPIC: 191005
KNOWLEDGE: K1.02 [2.8/2.9]
QID: P528 (B1927)

Which one of the following will provide the initial motor protection against electrical damage caused by gradual bearing failure?

A. Thermal overload device

B. Overcurrent trip relay

C. Underfrequency relay

D. Undervoltage device

ANSWER: A.

TOPIC: 191005
KNOWLEDGE: K1.02 [2.8/2.9]
QID: P1028 (B1526)

Which one of the following will result from prolonged operation of an AC induction motor with excessively high stator temperatures?

A. Decreased electrical current demand due to reduced counter electromotive force.

B. Increased electrical current demand due to reduced counter electromotive force.

C. Decreased electrical resistance to ground due to breakdown of winding insulation.

D. Increased electrical resistance to ground due to breakdown of winding insulation.

ANSWER: C.

TOPIC: 191005
KNOWLEDGE: K1.02 [2.8/2.9]
QID: P1528 (B1126)

Continuous operation of a motor at rated load with a loss of required cooling to the motor windings will eventually result in...

A. cavitation of the pumped fluid.

B. failure of the motor overcurrent protection devices.

C. breakdown of the motor insulation and electrical grounds.

D. phase current imbalance in the motor and overspeed trip actuation.

ANSWER: C.

TOPIC: 191005
KNOWLEDGE: K1.02 [2.8/2.9]
QID: P2644 (B2242)

Thermal overload devices will provide the first electrical protection for a pump motor in the event of...

A. a locked rotor upon starting.

B. an electrical short circuit.

C. gradual motor bearing damage.

D. a sheared shaft during operation.

ANSWER: C.

TOPIC: 191005
KNOWLEDGE: K1.02 [2.8/2.9]
QID: P2927

Which one of the following trip signals will trip the breaker for an operating motor that experiences a seized rotor?

A. Undervoltage

B. Underfrequency

C. Time-delayed overcurrent

D. Instantaneous overcurrent

ANSWER: C.

TOPIC: 191005
KNOWLEDGE: K1.03 [2.7/2.8]
QID: P115 (B120)

A main generator that is connected to an infinite power grid has the following initial indications:

100 MW
0 MVAR
2,900 amps
20 KV

If main generator field current is <u>reduced</u> slightly, amps will _____; and MW will _____.

A. increase; decrease

B. decrease; decrease

C. increase; remain the same

D. decrease; remain the same

ANSWER: C.

TOPIC: 191005
KNOWLEDGE: K1.03 [2.7/2.8]
QID: P229

Excessive current will be drawn by an AC induction motor that is operating...

A. completely unloaded.

B. at full load.

C. with open-circuited stator windings.

D. with short-circuited stator windings.

ANSWER: D.

TOPIC: 191005
KNOWLEDGE: K1.03 [2.7/2.8]
QID: P529

A main generator that is connected to an infinite power grid has the following indications:

500 MW
300 MVAR (out)
2,800 amps

If main generator field current is reduced slightly, amps will _____; and MW will _____.

A. increase; decrease

B. increase; remain the same

C. decrease; decrease

D. decrease; remain the same

ANSWER: D.

TOPIC: 191005
KNOWLEDGE: K1.03 [2.7/2.8]
QID: P928

A main generator is connected to an infinite power grid. If the voltage supplied to the generator field is slowly and continuously decreased, the generator will experience high current due to... (Assume no generator protective actuations occur.)

A. excessive generator MW.

B. excessive generator MVAR out.

C. excessive generator MVAR in.

D. generator reverse power.

ANSWER: C.

TOPIC: 191005
KNOWLEDGE: K1.03 [2.7/2.8]
QID: P1128 (B2228)

An AC generator is supplying an isolated electrical system with a power factor of 1.0. If generator voltage is held constant while real load (KW) increases, the current supplied by the generator will increase in direct proportion to the _____ of the change in real load. (Assume the generator power factor remains constant at 1.0.)

A. cube

B. square

C. amount

D. square root

ANSWER: C.

TOPIC: 191005
KNOWLEDGE: K1.03 [2.7/2.8]
QID: P1428 (B1830)

A main generator that is connected to an infinite power grid has the following indications:

600 MW
100 MVAR (in)
13,800 amps
25 KV

If main generator excitation current is increased slightly, amps will initially _____; and MW will initially _____.

A. decrease; increase

B. increase; increase

C. decrease; remain the same

D. increase; remain the same

ANSWER: C.

TOPIC: 191005
KNOWLEDGE: K1.03 [2.7/2.8]
QID: P1728 (B1729)

A main generator that is connected to an infinite power grid has the following indications:

600 MW
100 MVAR (in)
13,800 amps
25 KV

If main generator excitation current is decreased slightly, amps will _____; and MVAR will _____.

A. decrease; increase

B. increase; increase

C. decrease; decrease

D. increase; decrease

ANSWER: B.

TOPIC: 191005
KNOWLEDGE: K1.03 [2.7/2.8]
QID: P1928 (B226)

A main generator is connected to an infinite power grid. Which one of the following conditions will exist if the generator is operating underexcited?

A. Negative MVAR (VARs in) with a leading power factor

B. Positive MVAR (VARs out) with a leading power factor

C. Positive MVAR (VARs out) with a lagging power factor

D. Negative MVAR (VARs in) with a lagging power factor

ANSWER: A.

TOPIC: 191005
KNOWLEDGE: K1.03 [2.7/2.8]
QID: P2027 (B2028)

A diesel generator (DG) is supplying both KW and KVAR to an electrical bus that is connected to an infinite power grid. Assuming DG and bus voltage do not change, if the DG voltage regulator setpoint is increased slightly, DG KW will _____; and DG amps will _____.

A. remain the same; increase

B. remain the same; remain the same

C. increase; increase

D. increase; remain the same

ANSWER: A.

TOPIC: 191005
KNOWLEDGE: K1.03 [2.7/2.8]
QID: P2228

A diesel generator (DG) is supplying an electrical bus that is connected to an infinite power grid. Assuming DG terminal voltage and bus frequency do not change, if the DG governor setpoint is increased from 60.0 Hz to 60.1 Hz, DG KVAR load will _____; and DG amps will _____.

A. increase; increase

B. increase; remain the same

C. remain the same; increase

D. remain the same; remain the same

ANSWER: C.

TOPIC: 191005
KNOWLEDGE: K1.03 [2.7/2.8]
QID: P2328 (B2330)

A main generator that is connected to an infinite power grid has the following indications:

600 MW
100 MVAR (out)
13,800 amps
25 KV

If main generator field current is decreased, amps will initially _____; and MVAR will initially _____.

A. decrease; increase

B. increase; increase

C. decrease; decrease

D. increase; decrease

ANSWER: C.

TOPIC: 191005
KNOWLEDGE: K1.03 [2.7/2.8]
QID: P2528 (B2530)

A diesel generator (DG) is supplying both KW and KVAR to an electrical bus that is connected to an infinite power grid. Assuming bus voltage does not change, if the DG voltage regulator setpoint is decreased slightly, DG KW will _____; and DG amps will _____.

A. remain the same; decrease

B. remain the same; remain the same

C. decrease; decrease

D. decrease; remain the same

ANSWER: A.

TOPIC: 191005
KNOWLEDGE: K1.03 [2.7/2.8]
QID: P2628 (B1532)

A main generator that is connected to an infinite power grid has the following indications:

100 MW
0 MVAR
2,900 amps
20 KV

If main generator excitation is increased, amps will _____; and MW will _____.

A. remain the same; increase

B. remain the same; remain the same

C. increase; increase

D. increase; remain the same

ANSWER: D.

TOPIC: 191005
KNOWLEDGE: K1.03 [2.7/2.8]
QID: P2728 (B2729)

A main generator is supplying power to an infinite power grid. If the generator field current is slowly and continuously increased, the generator will experience high current due to: (Assume no generator protective actuations occur.)

A. generator reverse power.

B. excessive generator MW.

C. excessive generator MVAR in.

D. excessive generator MVAR out.

ANSWER: D

TOPIC: 191005
KNOWLEDGE: K1.03 [2.7/2.8]
QID: P2838 (B3543)

Two identical 1,000 MW generators are operating in parallel supplying the same isolated electrical bus. The generator output breakers provide identical protection for the generators. Generator A and B output indications are as follows:

Generator A	Generator B
22 KV	22 KV
60.2 Hertz	60.2 Hertz
800 MW	800 MW
50 MVAR (out)	25 MVAR (in)

A malfunction causes the voltage regulator for generator B to slowly and continuously increase the terminal voltage for generator B. If no operator action is taken, generator B output current will...

A. increase continuously until the output breaker for generator A trips on overcurrent.

B. increase continuously until the output breaker for generator B trips on overcurrent.

C. initially decrease, and then increase until the output breaker for generator A trips on overcurrent.

D. initially decrease, and then increase until the output breaker for generator B trips on overcurrent.

ANSWER: D.

TOPIC: 191005
KNOWLEDGE: K1.03 [2.7/2.8]
QID: P3229 (B3227)

Refer to the partial drawing of two identical radial-flow centrifugal pumps in a cooling water system (see figure below).

The cooling water system is being returned to service following maintenance on the pumps. Each pump is driven by an identical three-phase AC induction motor.

Pump A was started five minutes ago to initiate flow in the cooling water system. Pump B is about to be started.

When pump B is started, which one of the following would cause the ammeter for pump B to remain off-scale high for several seconds longer than usual before stabilizing at a normal running current indication?

A. The pump packing was removed and not reinstalled.

B. The pump was initially rotating in the reverse direction.

C. Two phases of the motor windings were electrically switched.

D. The coupling between the motor and the pump was removed and not reinstalled.

ANSWER: B.

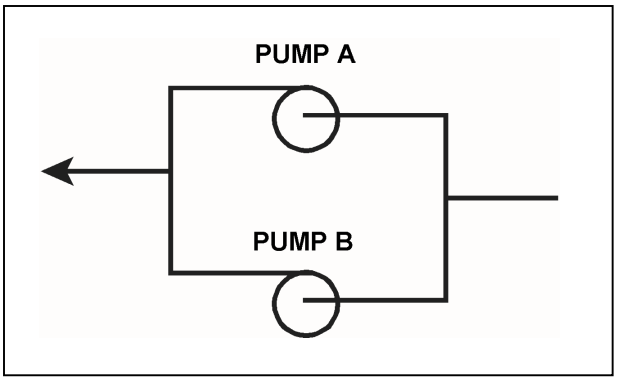

TOPIC: 191005
KNOWLEDGE: K1.03 [2.7/2.8]
QID: P3629 (B3629)

A main turbine-generator is operating in parallel with an infinite power grid. If the turbine control valves (or throttle valves) slowly fail open, the generator will experience high current primarily due to... (Assume no generator protective actuations occur.)

A. excessive generator MW.

B. excessive generator VARs out.

C. excessive generator VARs in.

D. generator reverse power.

ANSWER: A.

TOPIC: 191005
KNOWLEDGE: K1.03 [2.7/2.8]
QID: P4115 (B4115)

A main generator is operating and connected to an infinite power grid. Elevated main generator winding temperature requires a reduction in reactive load from 200 MVAR (out) to 150 MVAR (out). To accomplish the reactive load reduction, the operator must _____ the generator field current; when generator reactive load equals 150 MVAR (out) the generator power factor will be _____ than the initial power factor.

A. increase; larger

B. increase; smaller

C. decrease; larger

D. decrease; smaller

ANSWER: C.

TOPIC: 191005
KNOWLEDGE: K1.03 [2.7/2.8]
QID: P4315

A main generator that is connected to an infinite power grid has the following indications:

22 KV
60 Hertz
575 MW
100 MVAR (in)

Which one of the following contains a combination of manual adjustments to the main generator voltage regulator and speed control setpoints such that each adjustment will initially result in an increase in main generator amps?

	Voltage Setpoint	Speed Setpoint
A.	Increase	Increase
B.	Increase	Decrease
C.	Decrease	Increase
D.	Decrease	Decrease

ANSWER: C.

TOPIC: 191005
KNOWLEDGE: K1.03 [2.7/2.8]
QID: P4714 (B4714)

A nuclear power plant startup is in progress. The main generator has just been connected to the power grid with the following generator indications:

20 KV
288 amps
10 MW
0 MVAR

The operator suspects the main generator is operating under reverse power conditions and attempts to increase generator load (MW) normally. If the main generator is operating under reverse power conditions when the operator attempts to increase generator load, generator MW will initially _____; and generator amps will initially _____.

A. decrease; decrease

B. decrease; increase

C. increase; decrease

D. increase; increase

ANSWER: A.

TOPIC: 191005
KNOWLEDGE: K1.03 [2.7/2.8]
QID: P4814 (B4815)

A main generator is connected to an infinite power grid with the following generator output parameters:

22 KV
60 Hertz
575 MW
100 MVAR (in)

Which one of the following contains a combination of manual adjustments to the main generator voltage regulator and speed control setpoints such that each adjustment will initially result in a decrease in main generator amps?

	Voltage Setpoint	Speed Setpoint
A.	Increase	Increase
B.	Increase	Decrease
C.	Decrease	Increase
D.	Decrease	Decrease

ANSWER: B.

TOPIC: 191005
KNOWLEDGE: K1.03 [2.7/2.8]
QID: P5014

A main generator is connected to an infinite power grid with the following initial generator parameters:

22 KV
60 Hertz
600 MW
100 MVAR (out)

Which one of the following contains a combination of manual adjustments to the main generator voltage regulator and speed control setpoints such that each adjustment will initially result in an increase in main generator amps?

	Voltage Setpoint	Speed Setpoint
A.	Increase	Increase
B.	Increase	Decrease
C.	Decrease	Increase
D.	Decrease	Decrease

ANSWER: A.

TOPIC: 191005
KNOWLEDGE: K1.03 [2.7/2.8]
QID: P5414 (B5415)

A main generator is connected to an infinite power grid. Which one of the following pairs of main generator output parameters places the generator in the closest proximity to slipping a pole.

A. 800 MW; 200 MVAR (in)

B. 800 MW; 600 MVAR (in)

C. 400 MW; 200 MVAR (out)

D. 400 MW; 600 MVAR (out)

ANSWER: B.

TOPIC: 191005
KNOWLEDGE: K1.03 [2.7/2.8]
QID: P5514

A main generator is connected to an infinite power grid with the following initial generator parameters:

22 KV
60 Hertz
600 MW
100 MVAR (out)

Which one of the following contains a combination of manual adjustments to the main generator voltage regulator and speed control setpoints such that each adjustment will initially result in a decrease in main generator amps?

	Voltage Setpoint	Speed Setpoint
A.	Increase	Increase
B.	Increase	Decrease
C.	Decrease	Increase
D.	Decrease	Decrease

ANSWER: D.

TOPIC: 191005
KNOWLEDGE: K1.03 [2.7/2.8]
QID: P6014 (B6014)

During a surveillance test, a 4,000 KW diesel generator (DG) and a 1,000 MW main generator (MG) at a nuclear power plant are connected to the same power grid.

The following stable generator output conditions exist:

Diesel Generator	Main Generator
700 KW	800 MW
200 KVAR (out)	100 MVAR (out)

A malfunction then occurs, causing the voltage regulator for the MG to slowly and continuously increase the MG field current. If no operator action is taken, the DG output current will _____ until a breaker trip separates the generators.

A. remain about the same

B. increase continuously

C. initially increase, and then decrease

D. initially decrease, and then increase

ANSWER: D.

TOPIC: 191005
KNOWLEDGE: K1.03 [2.7/2.8]
QID: P6114 (B6115)

A main generator is connected to an infinite power grid with the following generator output parameters:

22 KV
60 Hertz
575 MW
100 MVAR (in)

Which one of the following contains a combination of minor adjustments to the main generator voltage regulator and speed control setpoints such that each adjustment will cause the main generator to operate at a power factor closer to 1.0? (Assume the generator power factor remains less than 1.0.)

	Voltage Setpoint	Speed Setpoint
A.	Increase	Increase
B.	Increase	Decrease
C.	Decrease	Increase
D.	Decrease	Decrease

ANSWER: A.

TOPIC: 191005
KNOWLEDGE: K1.03 [2.7/2.8]
QID: P6315 (B6314)

A main turbine-generator is connected to an infinite power grid with the following generator output parameters:

25 KV
20,000 amps
830 MW
248 MVAR (out)

Which one of the following will significantly increase main generator output current <u>without</u> a significant change in main generator real load? (Assume the generator power factor remains less than 1.0.)

A. Increasing the main turbine speed control setpoint.

B. Increasing the main generator voltage regulator setpoint.

C. A 10 percent decrease in power grid electrical loads.

D. A 10 percent increase in power grid electrical loads.

ANSWER: B

TOPIC: 191005
KNOWLEDGE: K1.03 [2.7/2.8]
QID: P6515 (B4315)

A main generator is connected to an infinite power grid with the following generator output parameters:

22 KV
60 Hertz
575 MW
100 MVAR (out)

Which one of the following contains a combination of manual adjustments to the main generator voltage regulator and speed control setpoints such that each adjustment will result in main generator operation at a power factor closer to 1.0? (Assume the generator power factor remains less than 1.0.)

	Voltage Setpoint	Speed Setpoint
A.	Increase	Increase
B.	Increase	Decrease
C.	Decrease	Increase
D.	Decrease	Decrease

ANSWER: C.

TOPIC: 191005
KNOWLEDGE: K1.03 [2.7/2.8]
QID: P6614 (B6615)

During a surveillance test, a 4,000 KW diesel generator (DG) and a 1,000 MW main generator (MG) at a nuclear power plant are connected to a power grid.

The following stable generator output conditions initially exist:

Diesel Generator	Main Generator
700 KW	800 MW
200 KVAR (out)	100 MVAR (out)

A malfunction then occurs, causing the voltage regulator for the MG to slowly and continuously decrease the MG field current. If no operator action is taken, the DG output current will _____ until a breaker trip separates the generators.

A. increase continuously

B. decrease continuously

C. initially increase, and then decrease

D. initially decrease, and then increase

ANSWER: A.

TOPIC: 191005
KNOWLEDGE: K1.03 [2.7/2.8]
QID: P6914 (B6915)

A main generator is connected to an infinite power grid with the following generator output parameters:

100 MW
0 MVAR
2,625 amps
22 KV

If the main generator field current is decreased, main generator amps will initially _____; and MW will initially _____.

A. decrease; decrease

B. increase; decrease

C. decrease; remain the same

D. increase; remain the same

ANSWER: D.

TOPIC: 191005
KNOWLEDGE: K1.03 [2.7/2.8]
QID: P7615 (B7615)

A 4,000 KW diesel generator (DG) is supplying 2,000 KW to a 4.16 KV emergency bus. The DG governor is in the isochronous mode (no speed droop). The emergency bus is about to be synchronized with, and then connected to, an infinite offsite power grid by closing the emergency bus normal power feeder breaker.

The following stable emergency bus and normal power conditions currently exist:

Emergency Bus (from DG)	Normal Power (from Offsite)
4.16 KV	4.16 KV
60.0 Hz	60.1 Hz

When the emergency bus normal power feeder breaker is closed, the DG will… (Assume no additional operator action.)

A. transfer KW load to the offsite power grid but remain partially loaded.

B. transfer KW load to the offsite power grid until the DG is completely unloaded.

C. acquire KW load from the offsite power grid but remain within its KW load rating.

D. acquire KW load from the offsite power grid and ultimately exceed its KW load rating.

ANSWER: B.

TOPIC: 191005
KNOWLEDGE: K1.03 [2.7/2.8]
K1.04 [2.7/2.8]
QID: P7635 (B7635)

A radial flow centrifugal cooling water pump is being powered by a 480 VAC induction motor. If the motor input voltage slowly decreases from 480 VAC to 450 VAC, the pump flow rate will _____; and the motor current will _____. (Assume the motor does not stall.)

A. decrease; increase

B. decrease; decrease

C. remain the same; increase

D. remain the same; decrease

ANSWER: A.

TOPIC: 191005
KNOWLEDGE: K1.03 [2.7/2,8]
QID: P7644 (B7644)

A main generator is connected to an infinite power grid with the following generator output parameters:

22 KV
60 Hertz
575 MW
100 MVAR (out)

Which one of the following contains a combination of minor adjustments to the main generator voltage regulator and speed control setpoints such that each adjustment will cause the main generator to operate at a power factor farther from 1.0? (Assume the generator power factor remains less than 1.0.)

	Voltage Setpoint	Speed Setpoint
A.	Increase	Increase
B.	Increase	Decrease
C.	Decrease	Increase
D.	Decrease	Decrease

ANSWER: B.

TOPIC: 191005
KNOWLEDGE: K1.03 [2.7/2.8]
QID: P7684 (B7684)

A main generator is connected to an infinite power grid with the following generator output parameters:

22 KV
60 Hertz
975 MW
200 MVAR (out)

Main generator stator winding temperature is abnormally high. Which one of the following contains a combination of manual adjustments to the main generator speed control and voltage regulator setpoints such that each adjustment will reduce the main generator stator winding temperature? (Assume power factor remains less than 1.0.)

	Speed Setpoint	Voltage Setpoint
A.	Increase	Increase
B.	Increase	Decrease
C.	Decrease	Increase
D.	Decrease	Decrease

ANSWER: D.

TOPIC: 191005
KNOWLEDGE: K1.03 [2.7/2.8]
QID: P7695 (B7695)

A 4,000 KW rated diesel generator (DG) is supplying 2,000 KW to a 4.16 KV emergency bus. The DG governor is in the isochronous mode (no speed droop). The emergency bus is about to be synchronized with, and then connected to, an infinite offsite power grid by closing the emergency bus normal power feeder breaker.

The following stable emergency bus and normal power conditions currently exist:

Emergency Bus (from DG)	Normal Power (from Offsite)
4.16 KV	4.16 KV
60.1 Hz	59.9 Hz

When the emergency bus normal power feeder breaker is closed, the DG will… (Assume no additional operator action is taken.)

A. transfer KW load to the offsite power grid, but remain partially loaded.

B. transfer KW load to the offsite power grid until the DG is completely unloaded.

C. acquire KW load from the offsite power grid, but remain within its KW load rating.

D. acquire KW load from the offsite power grid and ultimately exceed its KW load rating.

ANSWER: D.

TOPIC: 191005
KNOWLEDGE: K1.04 [2.7/2.8]
QID: P28

If the speed of a centrifugal pump is increased to double pump flow rate, pump motor current will...

A. remain constant.

B. increase two-fold (double).

C. increase four-fold.

D. increase eight-fold.

ANSWER: D.

TOPIC: 191005
KNOWLEDGE: K1.04 [2.7/2.8]
QID: P120

A motor-driven centrifugal pump is operating with the following parameters:

Pump speed = 1,800 rpm
Pump head = 100 psid
Motor current = 10 amps

What will be the approximate value of pump head if pump speed is increased such that the motor draws 640 amps?

A. 400 psid

B. 800 psid

C. 1,200 psid

D. 1,600 psid

ANSWER: D.

TOPIC: 191005
KNOWLEDGE: K1.04 [2.7/2.8]
QID: P228 (B227)

A motor-driven centrifugal pump is operating with a flow rate of 3,000 gpm and a current requirement of 200 amps. If the pump speed is reduced such that the flow rate is 2,000 gpm, what is the final current requirement at the new lower speed? (Assume a constant motor voltage.)

A. 59 amps

B. 89 amps

C. 133 amps

D. 150 amps

ANSWER: A.

TOPIC: 191005
KNOWLEDGE: K1.04 [2.7/2.8]
QID: P328 (B326)

A motor-driven centrifugal pump is operating with the following parameters:

Speed	=	1,800 rpm
Motor current	=	40 amps
Pump head	=	20 psi
Pump flow rate	=	400 gpm

What will be the approximate values of pump head and motor current if pump speed is increased to 2,000 rpm?

A. 22 psi, 44 amps

B. 25 psi, 49 amps

C. 22 psi, 49 amps

D. 25 psi, 55 amps

ANSWER: D.

TOPIC: 191005
KNOWLEDGE: K1.04 [2.7/2.8]
QID: P428

A motor-driven centrifugal pump is operating at 600 rpm with the following parameters:

Motor current = 10 amps
Pump head = 50 psi
Pump flow rate = 200 gpm

What will be the approximate value of pump head if the flow is increased such that the motor draws 640 amps?

A. 400 psi

B. 600 psi

C. 800 psi

D. 1,200 psi

ANSWER: C.

TOPIC: 191005
KNOWLEDGE: K1.04 [2.7/2.8]
QID: P630

A motor-driven centrifugal pump is operating with a throttled discharge valve in an open system. If the pump discharge valve is fully opened to increase system flow rate, which one of the following will increase?

A. Pump discharge pressure

B. Available net positive suction head

C. Motor amps

D. Pump speed

ANSWER: C.

TOPIC: 191005
KNOWLEDGE: K1.04 [2.7/2.8]
QID: P1329

A centrifugal pump is operating with the following parameters:

Speed = 3,600 rpm
Motor current = 100 amps
Pump head = 50 psi
Pump flow rate = 400 gpm

What will be the approximate values of pump head and motor current if pump speed is decreased to 2,000 rpm?

A. 8.6 psi, 30.1 amps

B. 8.6 psi, 17.1 amps

C. 15.4 psi, 30.1 amps

D. 15.4 psi, 17.1 amps

ANSWER: D.

TOPIC: 191005
KNOWLEDGE: K1.04 [2.7/2.8]
QID: P1429

A two-speed centrifugal pump is driven by an AC motor with the following initial conditions:

Pump speed = 400 rpm
Motor current = 40 amps
Pump head = 60 psid

What will be the approximate value of pump head if pump speed is increased to 1,600 rpm?

A. 240 psid

B. 480 psid

C. 960 psid

D 3,840 psid

ANSWER: C.

TOPIC: 191005
KNOWLEDGE: K1.04 [2.7/2.8]
QID: P1530 (B2126)

A motor-driven centrifugal pump is operating with the following parameters:

Speed	=	1,200 rpm
Motor current	=	40 amps
Pump head	=	20 psid
Pump flow rate	=	400 gpm

What will be the approximate values of pump head and motor current if pump speed is increased to 1,600 rpm?

A. 25 psid, 55 amps

B. 25 psid, 95 amps

C. 36 psid, 55 amps

D. 36 psid, 95 amps

ANSWER: D.

TOPIC: 191005
KNOWLEDGE: K1.04 [2.7/2.8]
QID: P1629

A motor-driven centrifugal pump is operating with the following parameters:

Speed	= 1,200 rpm
Motor current	= 40 amps
Pump head	= 20 psi
Pump flow rate	= 400 gpm

What will be the approximate values of pump head and motor current if pump speed is increased to 1,800 rpm?

A. 36 psi, 95 amps

B. 36 psi, 135 amps

C. 45 psi, 95 amps

D. 45 psi, 135 amps

ANSWER: D.

TOPIC: 191005
KNOWLEDGE: K1.04 [2.7/2.8]
QID: P1729 (B1719)

A motor-driven centrifugal pump is operating with the following parameters:

Speed = 1,800 rpm
Motor current = 40 amps
Pump head = 20 psid
Pump flow rate = 400 gpm

What will be the approximate values of pump head and motor current if pump speed is decreased to 1,200 rpm?

A. 13 psid, 18 amps

B. 13 psid, 12 amps

C. 9 psid, 18 amps

D. 9 psid, 12 amps

ANSWER: D.

TOPIC: 191005
KNOWLEDGE: K1.04 [2.7/2.8]
QID: P1828 (B2627)

A motor-driven centrifugal pump is operating with a flow rate of 3,000 gpm and a motor current of 150 amps. If the pump speed is reduced such that the flow rate is 2,000 gpm, what is the final motor current at the new lower speed?

A. 44 amps

B. 59 amps

C. 67 amps

D. 100 amps

ANSWER: A.

TOPIC: 191005
KNOWLEDGE: K1.04 [2.7/2.8]
QID: P2130 (B2229)

A motor-driven centrifugal pump is operating at 600 rpm with the following parameters:

Motor current = 100 amps
Pump head = 50 psid
Pump flow rate = 880 gpm

What will be the approximate value of pump head if pump speed is increased to 1,200 rpm?

A. 71 psid

B. 100 psid

C. 141 psid

D. 200 psid

ANSWER: D.

TOPIC: 191005
KNOWLEDGE: K1.04 [2.7/2.8]
QID: P2329 (B2321)

A multi-speed centrifugal pump is operating at 3,600 rpm with a flow rate of 3,000 gpm. Which one of the following approximates the new flow rate if the speed is decreased to 3,000 rpm?

A. 1,000 gpm

B. 1,500 gpm

C. 2,000 gpm

D. 2,500 gpm

ANSWER: D.

TOPIC: 191005
KNOWLEDGE: K1.04 [2.7/2.8]
QID: P2529 (B2527)

A multi-speed centrifugal pump is operating with a flow rate of 1,800 gpm at a speed of 3,600 rpm.

Which one of the following approximates the new flow rate if the pump speed is decreased to 2,400 rpm?

A. 900 gpm

B. 1,050 gpm

C. 1,200 gpm

D. 1,350 gpm

ANSWER: C.

TOPIC: 191005
KNOWLEDGE: K1.04 [2.7/2.8]
QID: P3129 (B1626)

A multi-speed motor-driven centrifugal pump is operating with the following parameters:

Motor current = 27 amps
Pump head = 50 psid
Pump flow rate = 880 gpm

Which one of the following will be the approximate new value of pump head if pump speed is increased such that the motor draws 64 amps?

A. 89 psid

B. 119 psid

C. 211 psid

D. 281 psid

ANSWER: A.

TOPIC: 191005
KNOWLEDGE: K1.04 [2.7/2.8]
QID: P3130 (B3127)

Which one of the following describes the relationship between the current drawn by an AC induction motor and the amount of heat generated in the motor windings?

A. Heat generation is directly proportional to the current.

B. Heat generation is proportional to the cube of the current.

C. Heat generation is proportional to the square of the current.

D. Heat generation is proportional to the square root of the current.

ANSWER: C.

TOPIC: 191005
KNOWLEDGE: K1.04 [2.7/2.8]
QID: P3430 (B1228)

A motor-driven centrifugal pump is operating at 600 rpm with the following parameters:

Motor current = 100 amps
Pump head = 50 psid
Pump flow rate = 880 gpm

What will be the approximate value of pump head if pump speed is increased such that the motor draws 640 amps?

A. 93 psid

B. 126 psid

C. 173 psid

D. 320 psid

ANSWER: C.

TOPIC: 191005
KNOWLEDGE: K1.04 [2.7/2.8]
QID: P3730 (B3722)

A rotary positive displacement pump (PDP) is being used to supply water to a piping system. The PDP is driven by an AC induction motor. The initial parameters are:

System pressure = 500 psig
PDP flow rate = 50 gpm
PDP motor current = 40 amps

After several hours, the PDP motor speed is increased such that the new PDP flow rate is 100 gpm. If system pressure does <u>not</u> change, what is the approximate value of the PDP motor current at the 100 gpm flow rate?

A. 80 amps

B. 160 amps

C. 320 amps

D. 640 amps

ANSWER: A.

TOPIC: 191005
KNOWLEDGE: K1.04 [2.7/2.8]
QID: P4515 (B4515)

Refer to the pump performance curves for a centrifugal cooling water pump (see figure below). The pump is being driven by a single-speed AC induction motor. Pump flow rate is being controlled by a throttled discharge flow control valve.

The following initial pump conditions exist:

Pump motor current = 50 amps
Pump flow rate = 400 gpm

What will be the approximate value of pump motor current if the flow control valve is repositioned such that pump flow rate is 800 gpm?

A. Less than 100 amps

B. 200 amps

C. 400 amps

D. More than 500 amps

ANSWER: A.

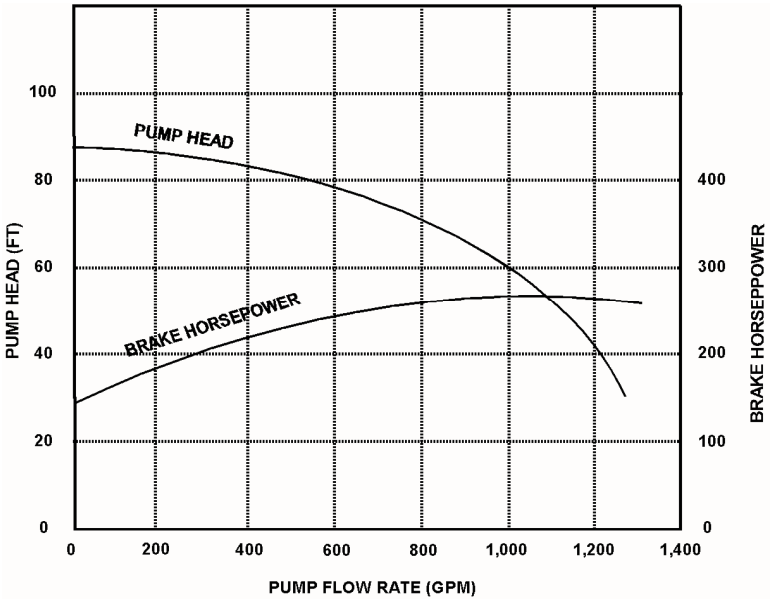

TOPIC: 191005
KNOWLEDGE: K1.04 [2.7/2.8]
QID: P4915 (B4914)

Consider two identical single-speed AC induction motors, one of which is connected to a radial-flow centrifugal pump and the other to a reciprocating-type positive displacement pump (PDP). Both pumps are taking suction at the same elevation from a vented water storage tank.

Each pump has a maximum design backpressure of 800 psig, and each is operating with the following initial conditions:

Flow rate = 200 gpm
Backpressure = 400 psig
Motor current = 100 amps

If the backpressure for each pump increases to 600 psig, the centrifugal pump will have a _____ flow rate than the PDP; and the centrifugal pump will have a _____ motor current than the PDP.

A. lower; higher

B. lower; lower

C. higher; higher

D. higher; lower

ANSWER: B.

TOPIC: 191005
KNOWLEDGE: K1.04 [2.7/2.8]
QID: P5814 (B5814)

Refer to the pump performance curves for a centrifugal cooling water pump (see figure below). The pump is being driven by a single-speed AC induction motor. Pump flow rate is being controlled by a throttled discharge flow control valve.

The following initial pump conditions exist:

Motor current = 100 amps
Pump flow rate = 800 gpm

What will be the approximate value of pump motor current if the flow control valve is repositioned such that pump flow rate decreases to 400 gpm?

A. Less than 15 amps

B. 25 amps

C. 50 amps

D. Greater than 75 amps

ANSWER: D.

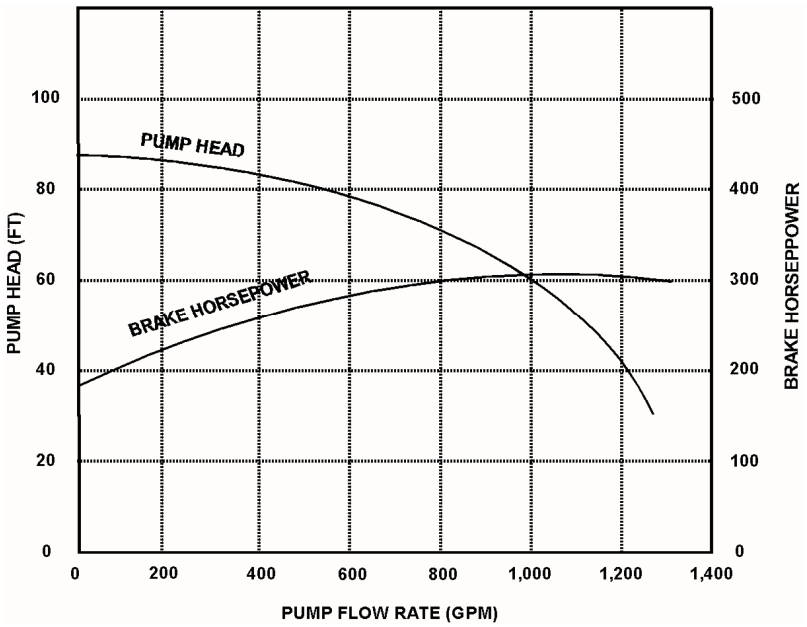

TOPIC: 191005
KNOWLEDGE: K1.04 [2.7/2.8]
QID: P6215 (B6215)

An AC induction motor is connected to a radial-flow centrifugal pump in a cooling water system. When the pump is started, the time period required to reach a stable running current will be shorter if the pump discharge valve is fully _____; and the stable running current will be lower if the pump discharge valve is fully _____.

A. open; open

B. open; closed

C. closed; open

D. closed; closed

ANSWER: D.

TOPIC: 191005
KNOWLEDGE: K1.04 [2.7/2.8]
QID: P6814 (B6814)

A centrifugal pump is driven by a single-speed AC induction motor. Pump flow rate is controlled by a throttled discharge flow control valve.

The following initial pump conditions exist:

Pump motor current = 50 amps
Pump flow rate = 400 gpm

What will the resulting pump motor current be if the flow control valve is repositioned such that pump flow rate increases to 800 gpm?

A. 100 amps

B. 200 amps

C. 400 amps

D. Cannot be determined without additional information.

ANSWER: D.

TOPIC: 191005
KNOWLEDGE: K1.04 [2.7/2.8]
QID: P7214 (B7214)

An axial flow ventilation fan is being driven by an AC motor. The fan is operating at its maximum rated flow rate. How will the fan motor current initially change if the flow rate through the fan is decreased by partially closing a discharge damper?

A. The motor current will increase in accordance with the centrifugal pump laws.

B. The motor current will increase, but not in accordance with the centrifugal pump laws.

C. The motor current will decrease in accordance with the centrifugal pump laws.

D. The motor current will decrease, but not in accordance with the centrifugal pump laws.

ANSWER: B

TOPIC: 191005
KNOWLEDGE: K1.04 [2.7/2.8]
QID: P7414 (B7414)

Consider two identical single-speed AC induction motors, one of which is connected to a radial-flow centrifugal pump and the other to a rotary-type positive displacement pump (PDP). Both pumps are taking suction from the bottom of a vented water storage tank.

Each pump is operating with the following initial conditions:

Flow rate = 200 gpm
Backpressure = 600 psig
Motor current = 100 amps

If the backpressure for each pump decreases to 400 psig, the centrifugal pump will have a _____ flow rate than the PDP; and the centrifugal pump will have a _____ motor current than the PDP.

A. lower; lower

B. lower; higher

C. higher; lower

D. higher; higher

ANSWER: D.

TOPIC: 191005
KNOWLEDGE: K1.04 [2.7/2.8]
QID: P7605 (B7605)

Refer to the pump performance curves for a centrifugal cooling water pump (see figure below). The pump is being driven by a single-speed AC induction motor. Pump flow rate is being controlled by a throttled discharge flow control valve.

The following initial pump conditions exist:

Motor current = 10 amps
Pump flow rate = 200 gpm

What will be the approximate value of pump motor current if the flow control valve is repositioned such that pump flow rate increases to 800 gpm?

A. 15 amps

B. 40 amps

C. 160 amps

D. Greater than 200 amps

ANSWER: A.

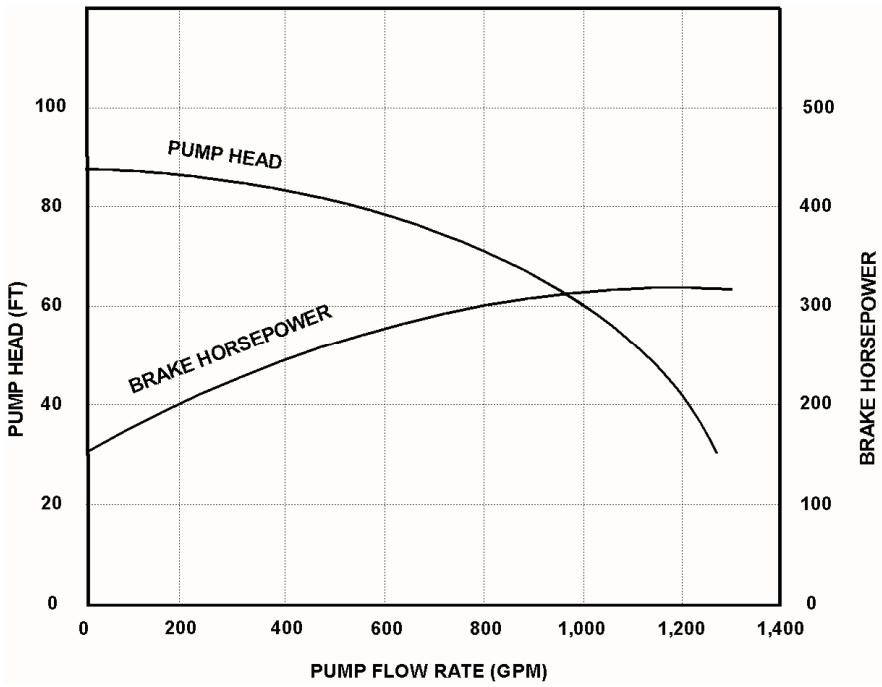

TOPIC: 191005
KNOWLEDGE: K1.04 [2.7/2.8]
QID: P7655 (B7655)

A motor-driven radial-flow centrifugal pump is operating to provide makeup water from a constant head source to a vented storage tank that is 30 feet tall. The pump is located at the base of the tank and discharges directly into the bottom of the tank. As the tank water level increases from 20 to 25 feet, the pump discharge pressure will _____; and the pump motor current will _____.

A. decrease; decrease

B. decrease; increase

C. increase; decrease

D. increase; increase

ANSWER: C.

TOPIC: 191005
KNOWLEDGE: K1.04 [2.7/2.8]
QID: P7665 (B7665)

An air-cooled AC induction motor is initially operating at steady-state conditions, producing a work output of 50 hp. A reduction in cooling air flow rate to the motor causes the average stator winding temperature to increase by 20ºF. To maintain a 50 hp work output at the higher stator winding temperature, the voltage applied to the motor must be _____ because the stator winding resistance has _____.

A. increased; increased

B. increased; decreased

C. decreased; increased

D. decreased; decreased

ANSWER: A.

TOPIC: 191005
KNOWLEDGE: K1.04 [2.7/2.8]
QID: P7696 (B7696)

The rate of heat production in the stator windings of an AC induction motor is _____ proportional to the _____ of the stator current.

A. directly, square

B. directly; amount

C. inversely; square

D. inversely; amount

ANSWER: A.

TOPIC: 191005
KNOWLEDGE: K1.04 [2.7/2.8]
QID: P7706 (B7706)

An axial flow ventilation fan is being driven by an AC motor. The fan is operating at 90 percent of rated flow with its discharge damper partially closed. How will the fan motor current change if its discharge damper is fully opened?

A. The motor current will increase in accordance with the centrifugal pump laws.

B. The motor current will increase, but not in accordance with the centrifugal pump laws.

C. The motor current will decrease in accordance with the centrifugal pump laws.

D. The motor current will decrease, but not in accordance with the centrifugal pump laws.

ANSWER: D.

TOPIC: 191005
KNOWLEDGE: K1.05 [2.8/2.7]
QID: P29 (B2127)

The starting current in a typical AC induction motor is typically much higher than the full-load running current because...

A. starting torque is lower than full-load running torque.

B. starting torque is higher than full-load running torque.

C. rotor speed during start is too low to generate significant counter electromotive force in the stator.

D. rotor current during start is too low to generate significant counter electromotive force in the stator.

ANSWER: C.

TOPIC: 191005
KNOWLEDGE: K1.05 [2.8/2.7]
QID: P108 (B105)

The average starting current for a typical AC induction motor is approximately...

A. ten to fifteen times its normal running current.

B. five to seven times its normal running current.

C. two to three times its normal running current.

D. the same as its normal running current.

ANSWER: B.

TOPIC: 191005
KNOWLEDGE: K1.05 [2.8/2.7]
QID: P230

Which one of the following describes the motor current indications that would be observed during the start of a large AC motor connected to a load?

A. Amps slowly increase to the normal operating value over a period of five time constants.

B. Amps immediately increase to the normal operating value and stabilize.

C. Amps immediately increase to many times the normal operating value and then decrease to the normal operating value.

D. Amps immediately increase to the full-scale value and then decrease rapidly to zero due to overload protection.

ANSWER: C.

TOPIC: 191005
KNOWLEDGE: K1.05 [2.8/2.7]
QID: P429

If the discharge valve of a large motor-driven centrifugal pump is kept closed during a normal pump start, the current indication for the AC induction motor will rise to...

A. approximately the full-load current value, and then decrease to the no-load current value.

B. approximately the full-load current value, and then stabilize at the full-load current value.

C. several times the full-load current value, and then decrease to the no-load current value.

D. several times the full-load current value, and then decrease to the full-load value.

ANSWER: C.

TOPIC: 191005
KNOWLEDGE: K1.05 [2.8/2.7]
QID: P930 (B2928)

Which one of the following is a characteristic of a typical AC induction motor that causes starting current to be greater than running current?

A. The rotor magnetic field induces an opposing voltage in the stator that is proportional to rotor speed.

B. After the motor starts, resistors are added to the electrical circuit to limit the running current.

C. A large amount of starting current is required to initially establish the rotating magnetic field.

D. The rotor does not develop maximum induced current flow until it has achieved synchronous speed.

ANSWER: A.

TOPIC: 191005
KNOWLEDGE: K1.05 [2.8/2.7]
QID: P1230

The starting current in an AC motor is significantly higher than the full-load running current because...

A. little counter electromotive force is induced in the rotor windings during motor start.

B. motor torque production is highest during motor start.

C. little counter electromotive force is induced in the stator windings during motor start.

D. work performed by the motor is highest during motor start.

ANSWER: C.

TOPIC: 191005
KNOWLEDGE: K1.05 [2.8/2.7]
QID: P1330

Starting current in an AC induction motor is typically _____ times full-load running current.

A. 1/4 to 1/2

B. 2 to 3

C. 5 to 7

D. 10 to 12

ANSWER: C.

TOPIC: 191005
KNOWLEDGE: K1.05 [2.8/2.7]
QID: P1827 (B1327)

Which one of the following describes the motor current during the start of a typical motor-driven radial-flow centrifugal pump with a closed discharge valve?

A. Current immediately increases to the full-load value and then gradually decreases to the no-load value.

B. Current immediately increases to the full-load value and then stabilizes at the full-load value.

C. Current immediately increases to many times the full-load value and then rapidly decreases to the no-load value after several seconds and then stabilizes.

D. Current immediately increases to many times the full-load value and then rapidly decreases to the full-load value after several seconds and then stabilizes.

ANSWER: C.

TOPIC: 191005
KNOWLEDGE: K1.05 [2.8/2.7]
QID: P2229 (B28)

Which one of the following describes the motor current indications that would be observed during the start of a large motor-driven radial-flow centrifugal pump with a closed discharge valve?

A. Current immediately increases to the full-load value and then gradually decreases to the no-load value over several minutes.

B. Current immediately increases to the no-load value and then stabilizes.

C. Current immediately increases to many times the no-load value and then rapidly decreases to the no-load value after several seconds.

D. Current immediately increases to many times the no-load value and then gradually decreases to the no-load value after several minutes.

ANSWER: C.

TOPIC: 191005
KNOWLEDGE: K1.05 [2.8/2.7]
QID: P2230 (B2227)

Two identical AC induction motors are connected to identical radial-flow centrifugal pumps being used to provide cooling water flow in separate systems in a nuclear power plant. Each motor is rated at 1,000 hp. The discharge valve for pump A is fully open and the discharge valve for pump B is fully shut. Each pump is currently off.

If the pumps are started under these conditions, the longer time period required to stabilize motor current will be experienced by the motor for pump _____; and the higher stable motor current will be experienced by the motor for pump _____.

A. A; A

B. A; B

C. B; A

D. B; B

ANSWER: A.

TOPIC: 191005
KNOWLEDGE: K1.05 [2.8/2.7]
QID: P2430 (B2428)

Which one of the following describes when the highest stator current will be experienced by an AC induction motor?

A. During motor operation at full load.

B. During motor operation at zero load.

C. Immediately after energizing the motor.

D. Immediately after deenergizing the motor.

ANSWER: C.

TOPIC: 191005
KNOWLEDGE: K1.05 [2.8/2.7]
QID: P2730 (B2727)

Two identical AC induction motors are connected to identical radial-flow centrifugal pumps in identical but separate cooling water systems. Each motor is rated at 200 hp. The discharge valve for pump A is fully shut and the discharge valve for pump B is fully open. Each pump is currently off.

If the pumps are started under these conditions, the longer time period required to stabilize motor current will be experienced by the motor for pump _____; and the higher stable motor current will be experienced by the motor for pump _____.

A. A; A

B. A; B

C. B; A

D. B; B

ANSWER: D.

TOPIC: 191005
KNOWLEDGE: K1.05 [2.8/2.7]
QID: P2931 (B3529)

Two identical AC induction motors are connected to identical radial-flow centrifugal pumps in identical but separate cooling water systems. Each motor is rated at 200 hp. The discharge valve for pump A is fully shut and the discharge valve for pump B is fully open. Each pump is currently off.

If the pumps are started under these conditions, the shorter time period required to reach a stable running current will be experienced by the motor for pump _____; and the higher stable running current will be experienced by the motor for pump _____.

A. A; A

B. A; B

C. B; A

D. B; B

ANSWER: B.

TOPIC: 191005
KNOWLEDGE: K1.05 [2.8/2.7]
QID: P4615 (B4614)

To minimize the adverse effects of starting current, an AC induction motor should be started _____ to _____ the stator counter electromotive force.

A. unloaded; quickly establish

B. unloaded; delay

C. partially loaded; quickly establish

D. partially loaded; delay

ANSWER: A.

TOPIC: 191005
KNOWLEDGE: K1.05 [2.8/2.7]
QID: P5715 (B5714)

Two identical AC induction motors are connected to identical radial-flow centrifugal pumps in identical but separate cooling water systems. Each motor is rated at 200 hp. The discharge valve for pump A is fully open and the discharge valve for pump B is fully closed. Each pump is currently off.

If the pumps are started under these conditions, the shorter time period required to reach a stable running current will be experienced by the motor for pump _____; and the higher stable running current will be experienced by the motor for pump _____.

A. A; A

B. A; B

C. B; A

D. B; B

ANSWER: C.

TOPIC: 191005
KNOWLEDGE: K1.06 [3.0/3.1]
QID: P30 (B1826)

What is the primary reason for limiting the number of starts for an electric motor in a given period of time?

A. Prevent overheating of the windings due to high starting currents.

B. Prevent overheating of the windings due to shorting within the stator.

C. Prevent rotor damage due to excessive cyclic stresses on the shaft.

D. Prevent rotor damage due to excessive axial displacement of the shaft.

ANSWER: A.

TOPIC: 191005
KNOWLEDGE: K1.06 [3.0/3.1]
QID: P231 (B328)

The frequency of starts for large AC motors should be limited to prevent excessive...

A. heat buildup within the motor.

B. wear of pump thrust bearings.

C. torsional stresses on the motor shaft.

D. arcing and degradation of motor breaker contacts.

ANSWER: A.

TOPIC: 191005
KNOWLEDGE: K1.06 [3.0/3.1]
QID: P1031

The number of starts for an electric motor in a given period of time should be limited because overheating of the _____ can occur due to the _____ counter electromotive force produced at low rotor speeds.

A. windings; low

B. windings; high

C. commutator and/or slip rings; low

D. commutator and/or slip rings; high

ANSWER: A.

TOPIC: 191005
KNOWLEDGE: K1.06 [3.0/3.1]
QID: P1131 (B1128)

The frequency of start/stop cycles for an electrical motor is limited to prevent...

A. overheating the motor windings.

B. overheating the motor supply bus.

C. excessive shaft torsional stresses.

D. excessive cycling of the motor breaker.

ANSWER: A.

TOPIC: 191005
KNOWLEDGE: K1.06 [3.0/3.1]
QID: P2531 (B2528)

Frequent starts of large motors will result in overheating of the motor windings due to high current flow caused by...

A. low electrical resistance of the motor windings.

B. an electrical short circuit between the rotor and stator.

C. high counter electromotive force at low rotor speeds.

D. windage losses between the rotor and stator.

ANSWER: A.

TOPIC: 191005
KNOWLEDGE: K1.06 [3.0/3.1]
QID: P2631 (B228)

Which one of the following is the primary reason for limiting the number of motor starts in a given time period?

A. Minimizes pitting of contacts in the motor breaker.

B. Prevents excessive torsional stresses on motor shaft.

C. Prevents overheating of motor windings.

D. Minimizes axial stresses on motor bearings.

ANSWER: C.

TOPIC: 191005
KNOWLEDGE: K1.06 [3.0/3.1]
QID: P3331 (B3327)

A large centrifugal pump is driven by a 200 horsepower AC induction motor. The motor breaker control circuit contains the following protection devices: instantaneous overcurrent relay, motor thermal overload relay, control power fuses, and an anti-pumping device.

The pump had been manually started and stopped several times during a 5 minute period when the motor breaker tripped. Which one of the following is the most likely cause of the breaker trip?

A. Motor thermal overload.

B. Instantaneous overcurrent.

C. Blown control power fuse.

D. Anti-pumping device actuation.

ANSWER: A.

TOPIC: 191006
KNOWLEDGE: K1.04 [2.5/2.7]
QID: P6716

A reactor is shut down with core decay heat being removed by the residual heat removal (RHR) system. Assume that only the RHR heat exchangers are removing heat from the reactor coolant system (RCS) and that the RHR system provides complete thermal mixing of the RCS.

Given the following information:

Reactor core rated thermal power	=	2,950 MW
Core decay heat rate	=	0.5% rated thermal power
RHR system heat removal rate	=	5.3×10^7 Btu/hr
RHR and reactor coolant c_p	=	1.05 Btu/lbm-°F
Combined RCS and RHR inventory	=	425,000 lbm

Which one of the following actions will establish a reactor cooldown rate between 20°F /hour and 30°F/hour?

A. Increase RHR heat exchanger flow rate to increase the cooldown rate by 10°F/hour.

B. Increase RHR heat exchanger flow rate to increase the cooldown rate by 20°F/hour.

C. Reduce RHR heat exchanger flow rate to decrease the cooldown rate by 10°F/hour.

D. Reduce RHR heat exchanger flow rate to decrease the cooldown rate by 20°F/hour.

ANSWER: B.

TOPIC: 191006
KNOWLEDGE: K1.04 [2.5/2.7]
QID: P7116

A reactor is shut down with core decay heat being removed by the residual heat removal (RHR) system. Assume that only the RHR heat exchangers are removing heat from the reactor coolant system (RCS) and that the RHR system provides complete thermal mixing of the RCS.

Given the following information:

Reactor core rated thermal power	=	2,950 MW
Core decay heat rate	=	0.5% rated thermal power
RHR system heat removal rate	=	5.7×10^7 Btu/hr
RHR and reactor coolant c_p	=	1.05 Btu/lbm-°F
Combined RCS and RHR inventory	=	450,000 lbm

Which one of the following actions will establish a reactor cooldown rate between 20°F/hour and 30°F/hour?

A. Increase RHR heat exchanger flow rate to increase the cooldown rate by 10°F/hour.

B. Increase RHR heat exchanger flow rate to increase the cooldown rate by 20°F/hour.

C. Reduce RHR heat exchanger flow rate to decrease the cooldown rate by 10°F/hour.

D. Reduce RHR heat exchanger flow rate to decrease the cooldown rate by 20°F/hour.

ANSWER: A.

TOPIC: 191006
KNOWLEDGE: K1.04 [2.5/2.7]
QID: P7616

A nuclear power plant is shut down with core decay heat being removed by the residual heat removal (RHR) system. Assume that only the RHR heat exchangers are removing heat from the reactor coolant system (RCS) and that the RHR system provides complete thermal mixing of the RCS.

Given the following information:

Reactor core rated thermal power	=	2,950 MW
Core decay heat rate	=	0.6 percent rated thermal power
RHR system heat removal rate	=	8.1×10^7 Btu/hr
RCS c_p	=	1.05 Btu/lbm-°F
Combined RCS and RHR inventory	=	450,000 lbm

Which one of the following actions will establish an RCS cooldown rate between 20°F/hour and 30°F/hour?

A. Increase RHR heat exchanger flow rate to increase the cooldown rate by 10°F/hour.

B. Increase RHR heat exchanger flow rate to increase the cooldown rate by 20°F/hour.

C. Reduce RHR heat exchanger flow rate to decrease the cooldown rate by 10°F/hour.

D. Reduce RHR heat exchanger flow rate to decrease the cooldown rate by 20°F/hour.

ANSWER: D.

TOPIC: 191006
KNOWLEDGE: K1.07 [2.4/2.6]
QID: P104 (B231)

Refer to the drawing of an operating water cleanup system (see figure below).

All valves are identical and are initially 50 percent open. To lower the temperature at point 7, the operator can adjust valve _____ in the open direction.

A. A

B. B

C. C

D. D

ANSWER: D.

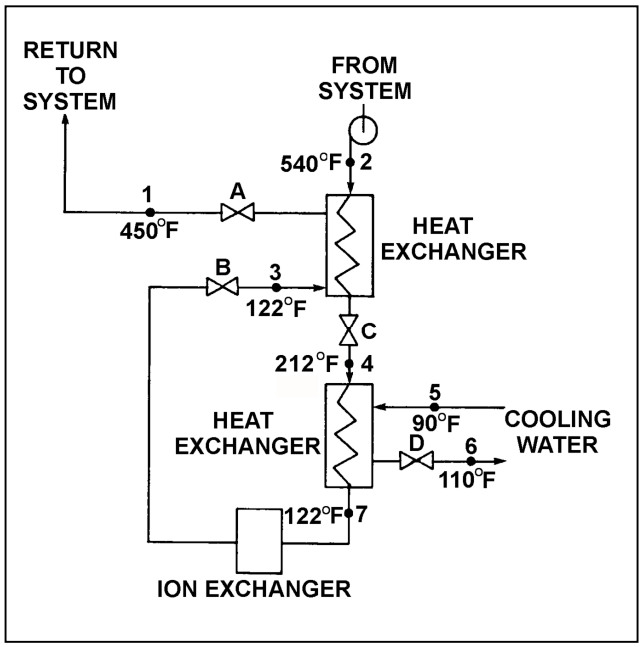

TOPIC: 191006
KNOWLEDGE: K1.07 [2.4/2.6]
QID: P534 (B331)

Refer to the drawing of an operating lube oil heat exchanger (see figure below).

Increasing the oil flow rate through the heat exchanger will cause the oil outlet temperature to _____ and the cooling water outlet temperature to _____.

A. increase; increase

B. increase; decrease

C. decrease; increase

D. decrease; decrease

ANSWER: A.

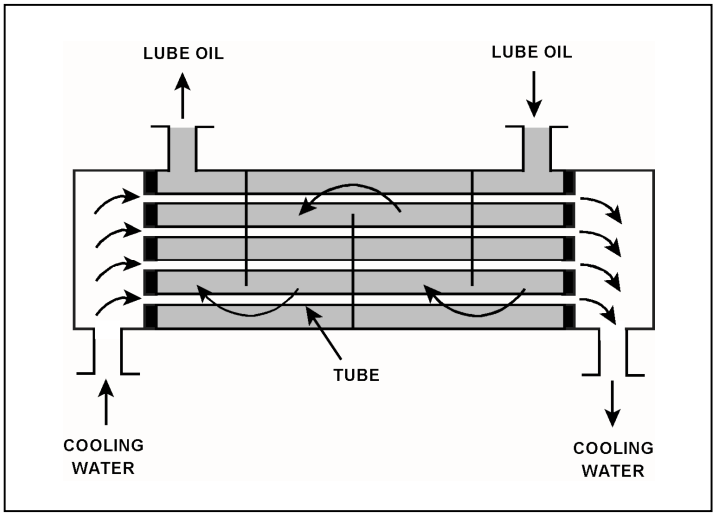

TOPIC: 191006
KNOWLEDGE: K1.07 [2.4/2.6]
QID: P632 (B431)

Refer to the drawing of an operating lube oil heat exchanger (see figure below).

Assume that the inlet lube oil and inlet cooling water temperatures are constant and cooling water flow rate remains the same. Decreasing the oil flow rate through the heat exchanger will cause the lube oil outlet temperature to _____ and the cooling water outlet temperature to _____.

A. increase, increase

B. increase, decrease

C. decrease, increase

D. decrease, decrease

ANSWER: D.

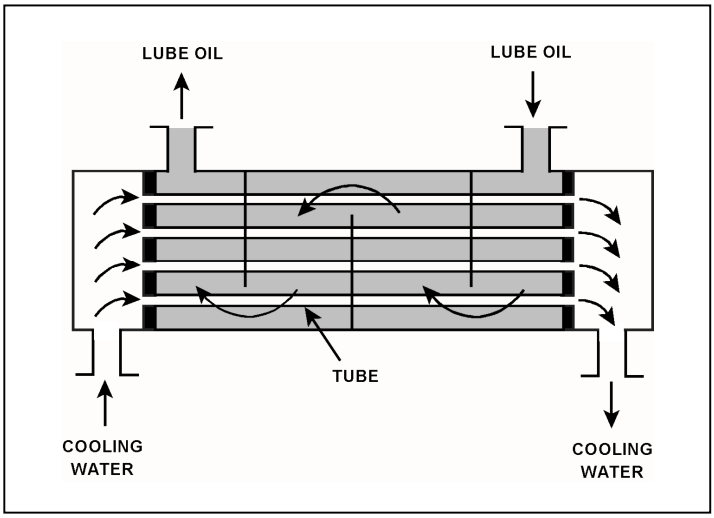

TOPIC: 191006
KNOWLEDGE: K1.07 [2.4/2.6]
QID: P732 (B1834)

Refer to the drawing of an operating water cleanup system (see figure below).

Valves A, B, and C are fully open. Valve D is 80 percent open. If valve D is throttled to 50 percent, the temperature at point...

A. 3 will decrease.

B. 4 will increase.

C. 5 will increase.

D. 6 will decrease.

ANSWER: B.

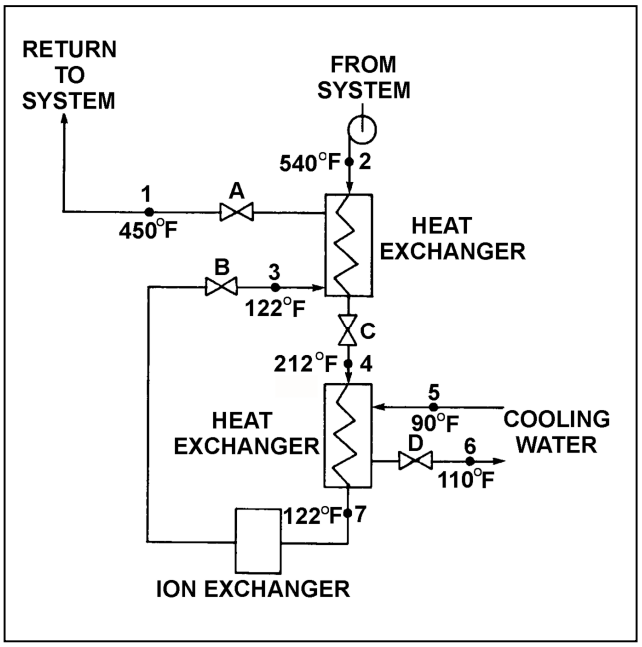

TOPIC: 191006
KNOWLEDGE: K1.07 [2.4/2.6]
QID: P1032 (B1031)

Refer to the drawing of an operating water cleanup system (see figure below).

Valves A, B, and C are fully open. Valve D is 20 percent open. If valve D is opened to 100 percent, the temperature at point...

A. 3 will increase.

B. 4 will decrease.

C. 5 will decrease.

D. 7 will increase.

ANSWER: B.

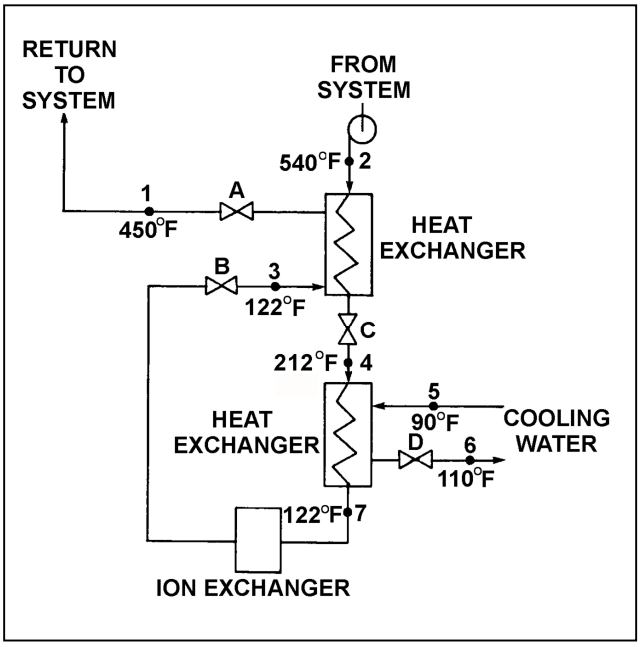

TOPIC: 191006
KNOWLEDGE: K1.07 [2.4/2.6]
QID: P1231 (B1231)

Refer to the drawing of an operating water cleanup system (see figure below).

All valves are identical and are initially 50 percent open. To lower the temperature at point 4, the operator can adjust valve _____ in the _____ direction.

A. A; open

B. B; shut

C. C; open

D. D; shut

ANSWER: B.

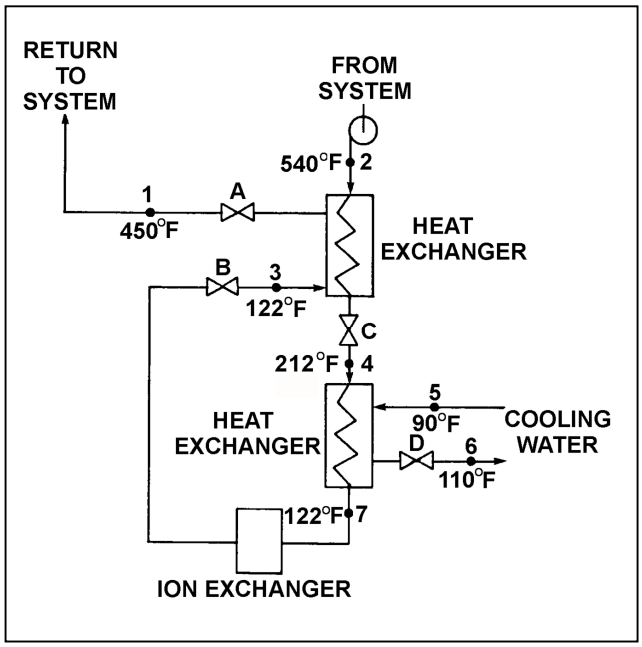

TOPIC: 191006
KNOWLEDGE: K1.07 [2.4/2.6]
QID: P1432 (B1432)

The rate of heat transfer between two liquids in a heat exchanger will increase if the… (Assume single-phase conditions and a constant specific heat for both liquids.)

A. inlet temperature of the hotter liquid decreases by 20°F.

B. inlet temperature of the colder liquid increases by 20°F.

C. flow rates of both liquids decrease by 10 percent.

D. flow rates of both liquids increase by 10 percent.

ANSWER: D.

TOPIC: 191006
KNOWLEDGE: K1.07 [2.4/2.6]
QID: P1533

Refer to the drawing of an operating lube oil heat exchanger (see figure below).

Given the following information:

$c_{p\text{-oil}}$ = 1.1 Btu/lbm-°F
$c_{p\text{-water}}$ = 1.0 Btu/lbm-°F
$T_{oil\ in}$ = 174°F
$T_{oil\text{-out}}$ = 114°F
$T_{water\text{-in}}$ = 85°F
$T_{water\text{-out}}$ = 115°F
$\dot{m}_{oil}$ = 4.0×10^4 lbm/hr
$\dot{m}_{water}$ = ?

What is the approximate mass flow rate of the cooling water?

A. 8.8×10^4 lbm/hr

B. 7.3×10^4 lbm/hr

C. 2.2×10^4 lbm/hr

D. 1.8×10^4 lbm/hr

ANSWER: A.

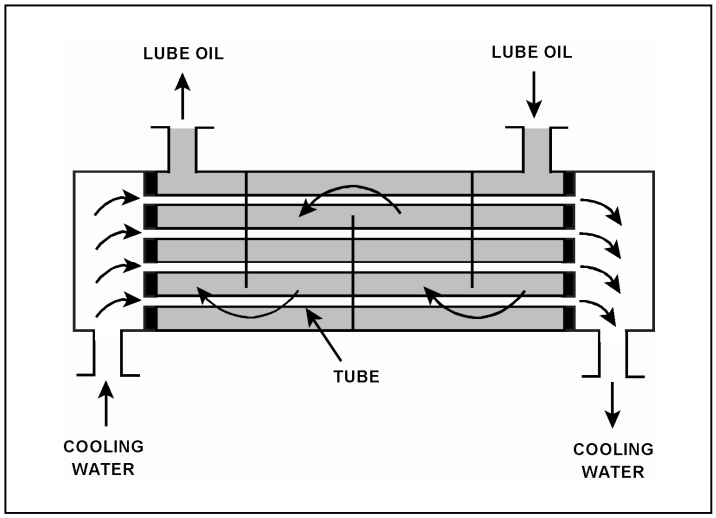

TOPIC: 191006
KNOWLEDGE: K1.07 [2.4/2.6]
QID: P1632 (B832)

The rate of heat transfer between two liquids in a single-phase heat exchanger will decrease if the... (Assume constant specific heat capacities.)

A. inlet temperatures of both liquids decrease by 20°F.

B. inlet temperatures of both liquids increase by 20°F.

C. flow rate of the colder liquid decreases by 10 percent.

D. flow rate of the hotter liquid increases by 10 percent.

ANSWER: C.

TOPIC: 191006
KNOWLEDGE: K1.07 [2.4/2.6]
QID: P1634 (B1631)

Refer to the drawing of an operating lube oil heat exchanger (see figure below).

Given the following information:

$\dot{m}_{oil}$ = 2.0×10^4 lbm/hr
$\dot{m}_{water}$ = 3.0×10^4 lbm/hr
$c_{p\text{-}oil}$ = 1.1 Btu/lbm-°F
$c_{p\text{-}water}$ = 1.0 Btu/lbm-°F
$T_{cw\text{-}in}$ = 92°F
$T_{cw\text{-}out}$ = 125°F
$T_{oil\text{-}in}$ = 180°F
$T_{oil\text{-}out}$ = ?

Which one of the following is the approximate temperature of the lube oil exiting the heat exchanger ($T_{oil\text{-}out}$)?

A. 126°F

B. 135°F

C. 147°F

D. 150°F

ANSWER: B.

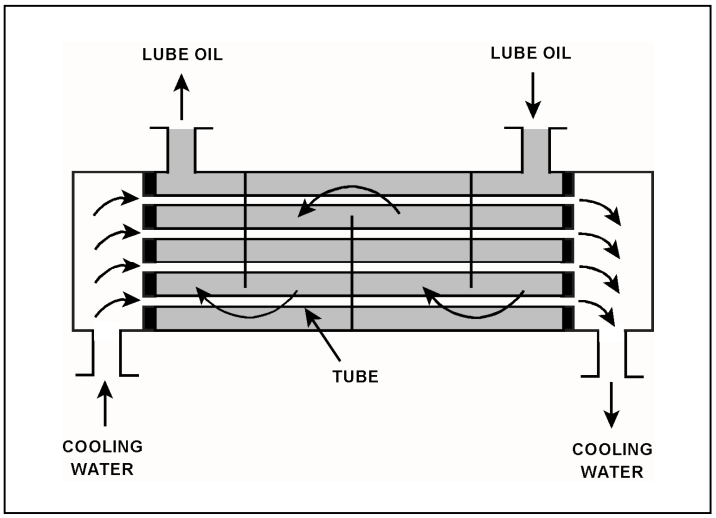

TOPIC: 191006
KNOWLEDGE: K1.07 [2.4/2.6]
QID: P1732 (B1732)

Which one of the following will reduce the heat transfer rate between two liquids in a heat exchanger? (Assume single-phase conditions and a constant specific heat for both liquids.)

A. The inlet temperatures of both liquids decrease by 20°F.

B. The inlet temperatures of both liquids increase by 20°F.

C. The inlet temperature of the hotter liquid increases by 20°F.

D. The inlet temperature of the colder liquid increases by 20°F.

ANSWER: D.

TOPIC: 191006
KNOWLEDGE: K1.07 [2.4/2.6]
QID: P1832 (B631)

The rate of heat transfer between two liquids in a heat exchanger will <u>increase</u> if the: (Assume single-phase conditions and a constant specific heat for each liquid.)

A. flow rate of the colder liquid decreases by 10 percent.

B. flow rate of the hotter liquid increases by 10 percent.

C. inlet temperatures of both liquids decrease by 20°F.

D. inlet temperatures of both liquids increase by 20°F.

ANSWER: B.

TOPIC: 191006
KNOWLEDGE: K1.07 [2.4/2.6]
QID: P1934 (B1933)

Refer to the drawing of an operating lube oil heat exchanger (see figure below).

Given the following information:

$\dot{m}_{oil}$ = 1.5 x 10^4 lbm/hr
$\dot{m}_{water}$ = 2.5 x 10^4 lbm/hr
$c_{p\text{-}oil}$ = 1.1 Btu/lbm-°F
$c_{p\text{-}water}$ = 1.0 Btu/lbm-°F
$T_{cw\text{-}in}$ = 92°F
$T_{cw\text{-}out}$ = 125°F
$T_{oil\text{-}in}$ = 160°F
$T_{oil\text{-}out}$ = ?

Which one of the following is the approximate temperature of the lube oil exiting the heat exchanger ($T_{oil\text{-}out}$)?

A. 110°F

B. 127°F

C. 135°F

D. 147°F

ANSWER: A.

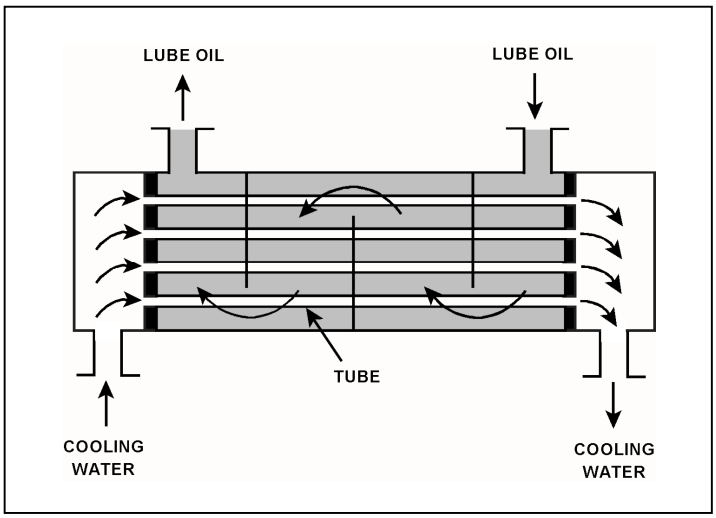

TOPIC: 191006
KNOWLEDGE: K1.07 [2.4/2.6]
QID: P2034

Refer to the drawing of an operating lube oil heat exchanger (see figure below).

Given the following information:

$c_{p\text{-oil}}$ = 1.1 Btu/lbm-°F
$c_{p\text{-water}}$ = 1.0 Btu/lbm-°F
$\dot{m}_{oil}$ = 1.2 x 10^4 lbm/hr
$\dot{m}_{water}$ = 1.61 x 10^4 lbm/hr
$T_{oil\ in}$ = 170°F
$T_{oil\ out}$ = 120°F
$T_{water\ out}$ = 110°F
$T_{water\ in}$ = ?

Which one of the following is the approximate cooling water inlet temperature ($T_{water\ in}$) for the heat exchanger?

A. 65°F

B. 69°F

C. 73°F

D. 77°F

ANSWER: B.

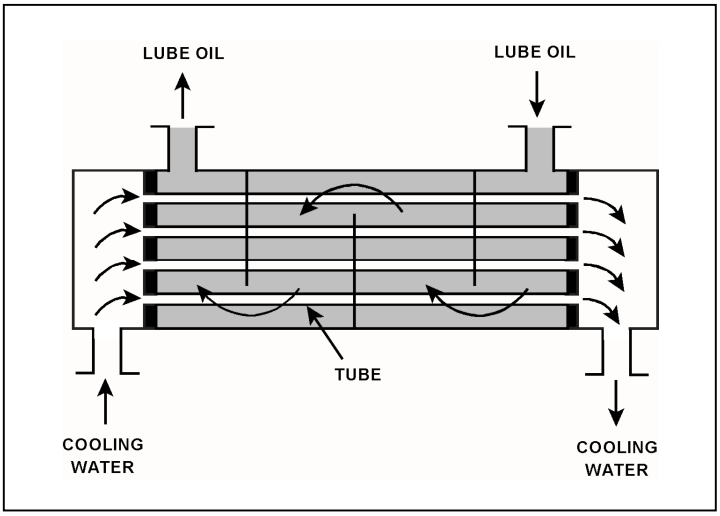

TOPIC: 191006
KNOWLEDGE: K1.07 [2.4/2.6]
QID: P2133 (B2132)

Refer to the drawing of a lube oil heat exchanger (see figure below).

The lube oil heat exchanger is in service with the following inlet temperatures:

Lube oil inlet temperature = 120°F
Cooling water inlet temperature = 60°F

Assuming that cooling water flow rate is greater than lube oil flow rate, which one of the following pairs of heat exchanger outlet temperatures is possible? (Assume both fluids have the same specific heat.)

	Lube Oil Outlet Temp	Cooling Water Outlet Temp
A.	100°F	100°F
B.	90°F	90°F
C.	80°F	80°F
D.	80°F	100°F

ANSWER: C.

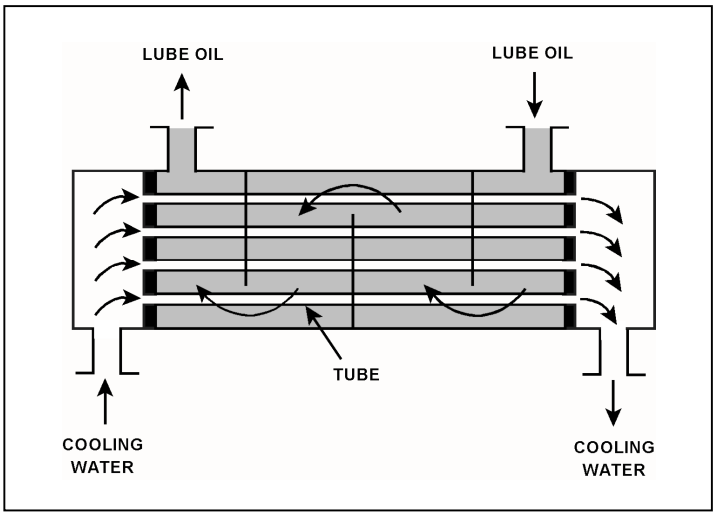

TOPIC: 191006
KNOWLEDGE: K1.07 [2.4/2.6]
QID: P2232

Refer to the drawing of an operating lube oil heat exchanger (see figure below).

Given the following information:

$\dot{m}_{oil}$ = 1.8 x 10^4 lbm/hr
$\dot{m}_{water}$ = 3.3 x 10^4 lbm/hr
$c_{p\text{-}oil}$ = 1.1 Btu/lbm-°F
$c_{p\text{-}water}$ = 1.0 Btu/lbm-°F
$T_{cw\text{-}in}$ = 90°F
$T_{cw\text{-}out}$ = 120°F
$T_{oil\text{-}in}$ = 190°F
$T_{oil\text{-}out}$ = ?

What is the approximate temperature of the lube oil exiting the heat exchanger ($T_{oil\text{-}out}$)?

A. 110°F

B. 120°F

C. 130°F

D. 140°F

ANSWER: D.

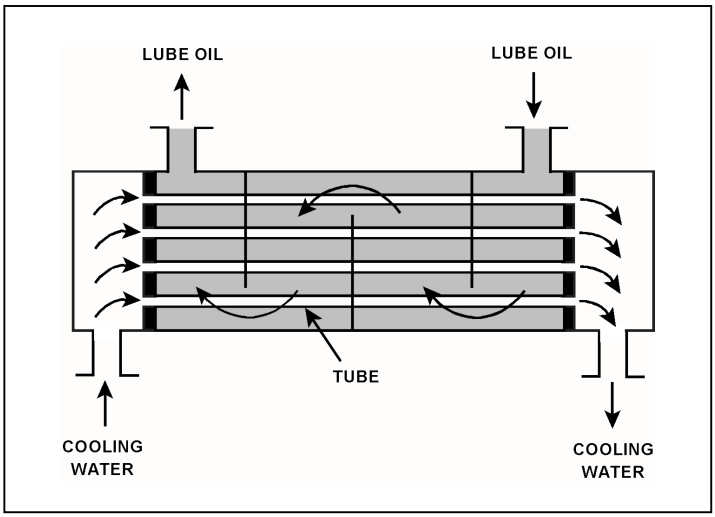

TOPIC: 191006
KNOWLEDGE: K1.07 [2.4/2.6]
QID: P2434 (B2233)

Refer to the drawing of a lube oil heat exchanger (see figure below).

The lube oil heat exchanger is in service with the following inlet temperatures:

Lube oil inlet temperature = 130°F
Cooling water inlet temperature = 70°F

Assuming that cooling water flow rate is greater than lube oil flow rate, which one of the following pairs of heat exchanger outlet temperatures is possible? (Assume both fluids have the same specific heat.)

	Lube Oil Outlet Temp	Cooling Water Outlet Temp
A.	90°F	100°F
B.	90°F	110°F
C.	100°F	100°F
D.	100°F	110°F

ANSWER: A.

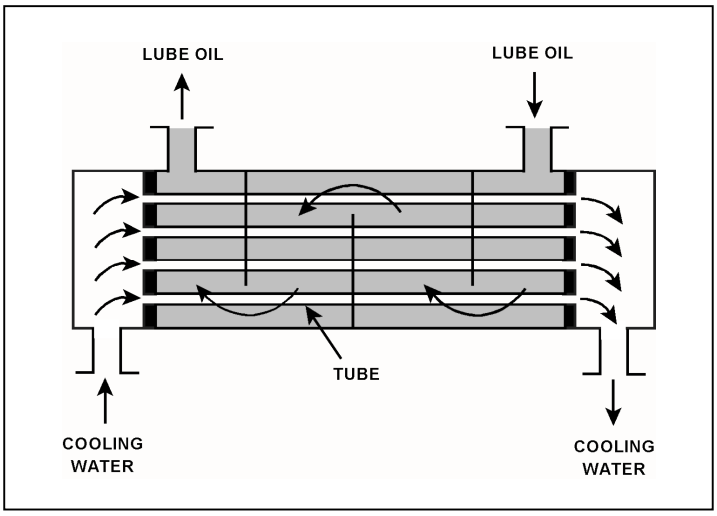

TOPIC: 191006
KNOWLEDGE: K1.07 [2.4/2.6]
QID: P2532 (B2534)

Refer to the drawing of an operating lube oil heat exchanger (see figure below).

Given the following information:

$\dot{m}_{oil}$ = 1.5 x 10^4 lbm/hr
$\dot{m}_{water}$ = 2.5 x 10^4 lbm/hr
$c_{p\text{-}oil}$ = 1.1 Btu/lbm-°F
$c_{p\text{-}water}$ = 1.0 Btu/lbm-°F
$T_{oil\text{-}in}$ = 160°F
$T_{oil\text{-}out}$ = 110°F
$T_{cw\text{-}in}$ = 92°F
$T_{cw\text{-}out}$ = ?

Which one of the following is the approximate temperature of the cooling water exiting the heat exchanger ($T_{cw\text{-}out}$)?

A. 110°F

B. 115°F

C. 120°F

D. 125°F

ANSWER: D.

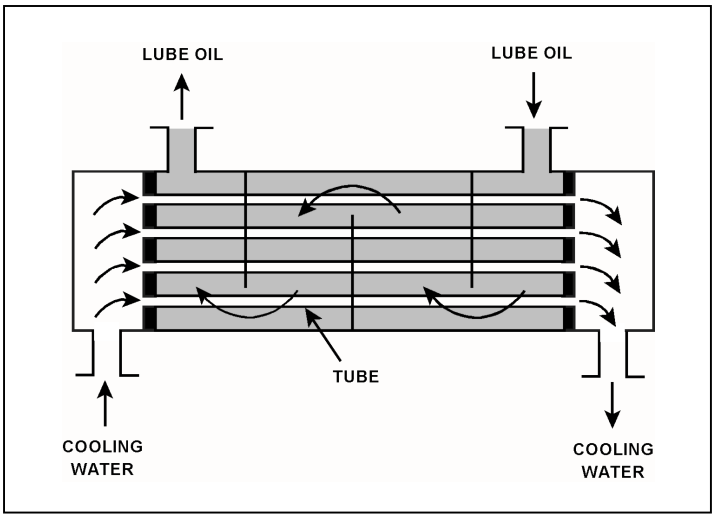

TOPIC: 191006
KNOWLEDGE: K1.07 [2.4/2.6]
QID: P2632 (B2531)

The rate of heat transfer between two liquids in a heat exchanger will decrease if the: (Assume single-phase conditions and a constant specific heat for both liquids.)

A. inlet temperature of the hotter liquid increases by 20°F.

B. inlet temperature of the colder liquid decreases by 20°F.

C. flow rates of both liquids decrease by 10 percent.

D. flow rates of both liquids increase by 10 percent.

ANSWER: C.

TOPIC: 191006
KNOWLEDGE: K1.07 [2.4/2.6]
QID: P2633 (B2632)

Refer to the drawing of a lube oil heat exchanger (see figure below).

The lube oil heat exchanger is in service with the following inlet temperatures:

Lube oil inlet temperature = 110°F
Cooling water inlet temperature = 75°F

Assuming that cooling water flow rate is greater than lube oil flow rate, which one of the following pairs of heat exchanger outlet temperatures is possible? (Assume both fluids have the same specific heat.)

	Lube Oil Outlet Temp	Cooling Water Outlet Temp
A.	100°F	100°F
B.	100°F	90°F
C.	90°F	100°F
D.	90°F	90°F

ANSWER: D.

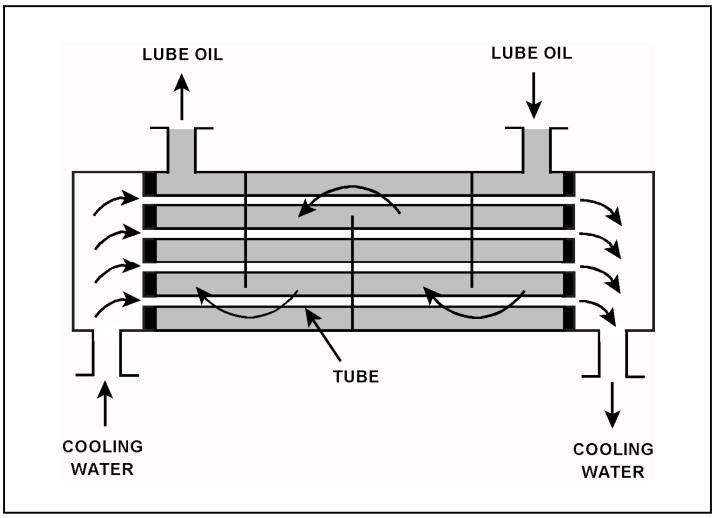

TOPIC: 191006
KNOWLEDGE: K1.07 [2.4/2.6]
QID: P2732 (B2732)

Refer to the drawing of an operating water cleanup system (see figure below).

All valves are identical and are initially 50 percent open. To raise the temperature at point 4, the operator can adjust valve _____ in the _____ direction.

A. A; shut

B. B; shut

C. C; open

D. D; open

ANSWER: C.

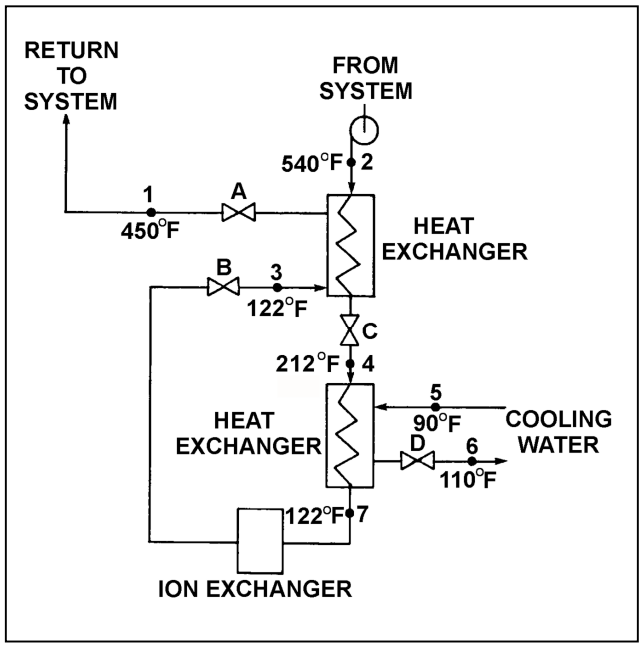

TOPIC: 191006
KNOWLEDGE: K1.07 [2.4/2.6]
QID: P2733 (B2733)

Refer to the drawing of a lube oil heat exchanger (see figure below).

The lube oil heat exchanger is in service with the following inlet temperatures:

Lube oil inlet temperature = 130°F
Cooling water inlet temperature = 70°F

Assuming that cooling water flow rate is greater than lube oil flow rate, which one of the following pairs of heat exchanger outlet temperatures is not possible? (Assume both fluids have the same specific heat.)

	Lube Oil Outlet Temp	Cooling Water Outlet Temp
A.	90°F	86°F
B.	100°F	85°F
C.	110°F	84°F
D.	120°F	83°F

ANSWER: D.

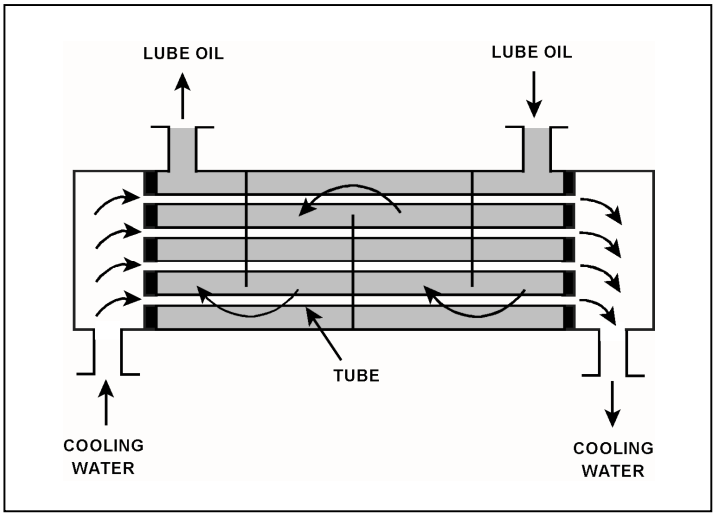

TOPIC: 191006
KNOWLEDGE: K1.07 [2.4/2.6]
QID: P2934 (B2933)

Refer to the drawing of a lube oil heat exchanger (see figure below).

The lube oil heat exchanger is in service with the following inlet temperatures:

Lube oil inlet temperature = 130°F
Cooling water inlet temperature = 70°F

Assuming the cooling water flow rate exceeds the lube oil flow rate, which one of the following pairs of heat exchanger outlet temperatures is possible? (Assume both fluids have the same specific heat.)

	Lube Oil Outlet Temp	Cooling Water Outlet Temp
A.	100°F	90°F
B.	100°F	100°F
C.	110°F	90°F
D.	110°F	100°F

ANSWER: A.

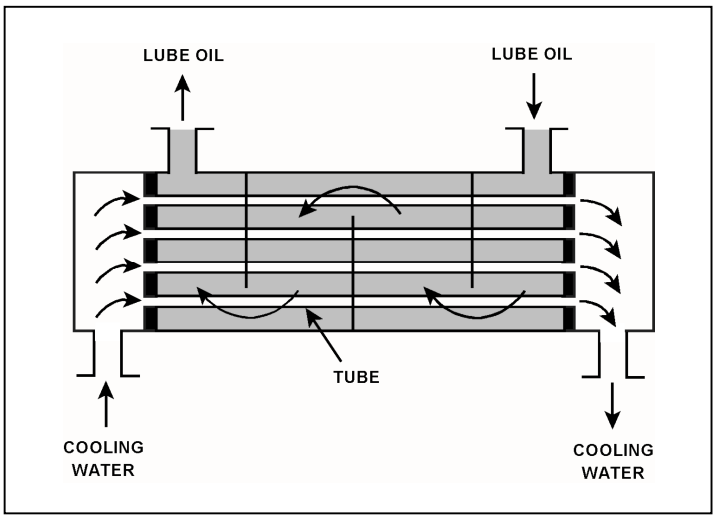

TOPIC: 191006
KNOWLEDGE: K1.07 [2.4/2.6]
QID: P3034 (B3082)

Refer to the drawing of a lube oil heat exchanger (see figure below).

Given the following heat exchanger parameters:

- Lube oil flow rate is 200 lbm/min.
- Lube oil enters the heat exchanger at 140°F.
- Lube oil leaves the heat exchanger at 100°F.
- Specific heat of the lube oil is 0.8 Btu/lbm-°F.
- Cooling water flow rate is 400 lbm/min.
- Cooling water enters the lube oil heat exchanger at 60°F.
- Specific heat of the cooling water is 1.0 Btu/lbm-°F.

What is the approximate temperature of the cooling water leaving the lube heat exchanger?

A. 76°F

B. 85°F

C. 92°F

D. 124°F

ANSWER: A.

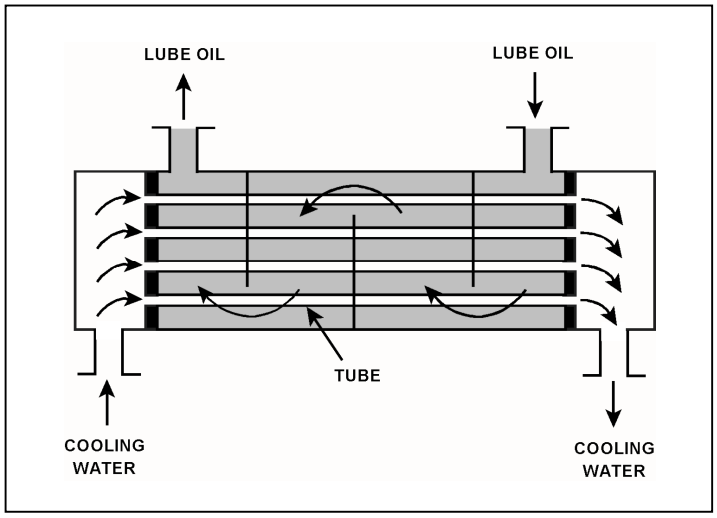

TOPIC: 191006
KNOWLEDGE: K1.07 [2.4/2.6]
QID: P3132 (B934)

Refer to the drawing of an operating lube oil heat exchanger (see figure below).

Given the following information:

$\dot{Q}_{oil}$ = 1.0 x 10^7 Btu/hr
$T_{oil\ in}$ = 170°F
$T_{oil\ out}$ = 134°F
$T_{water\ in}$ = 85°F
$T_{water\ out}$ = 112°F
$c_{p\text{-}oil}$ = 1.1 Btu/lbm-°F
$c_{p\text{-}water}$ = 1.0 Btu/lbm-°F
$\dot{m}_{water}$ = ?

Which one of the following is the approximate mass flow rate of the cooling water?

A. 4.5 x 10^5 lbm/hr

B. 3.7 x 10^5 lbm/hr

C. 2.5 x 10^5 lbm/hr

D. 1.2 x 10^5 lbm/hr

ANSWER: B.

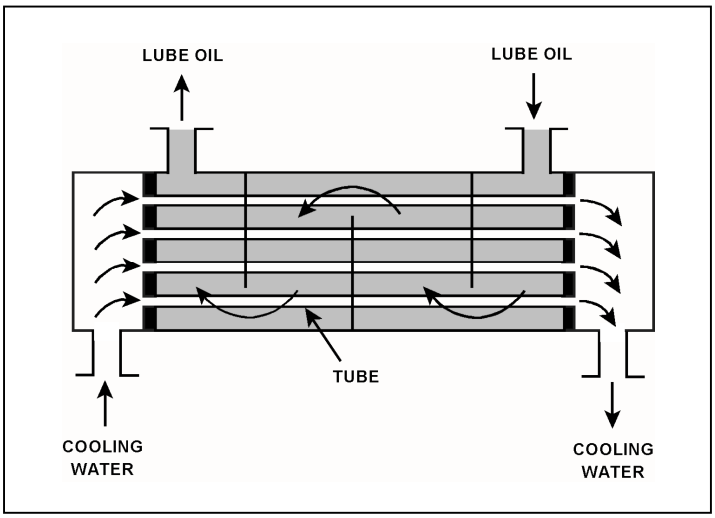

TOPIC: 191006
KNOWLEDGE: K1.07 [2.4/2.6]
QID: P3232 (B632)

Refer to the drawing of an operating water cleanup system (see figure below).

Valves A, B, and D are fully open and valve C is 50 percent open. If valve C is opened to 100 percent, how will the temperatures at points 3 and 6 be affected?

	Point 3	Point 6
A.	Decrease	Decrease
B.	Decrease	Increase
C.	Increase	Decrease
D.	Increase	Increase

ANSWER: D.

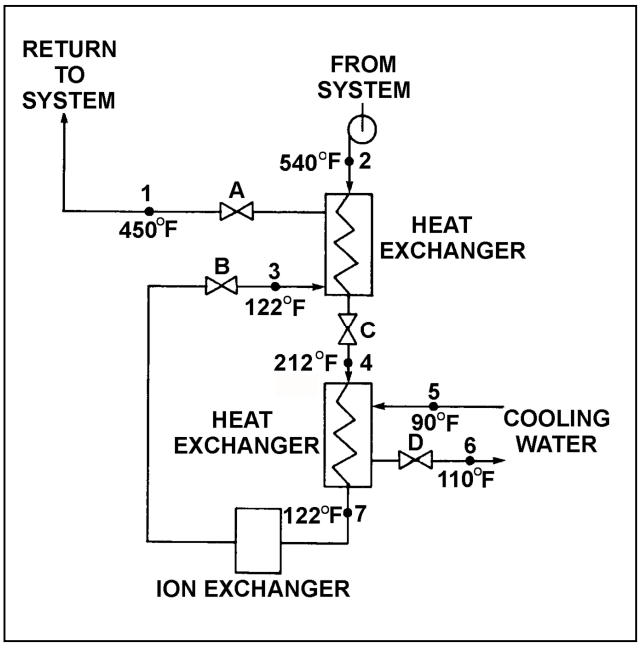

TOPIC: 191006
KNOWLEDGE: K1.07 [2.4/2.6]
QID: P3332 (B1930)

Refer to the drawing of an operating water cleanup system (see figure below). All valves are identical and are initially 50 percent open.

To raise the temperature at point 7, the operator can adjust valve _____ in the close direction.

A. A

B. B

C. C

D. D

ANSWER: D.

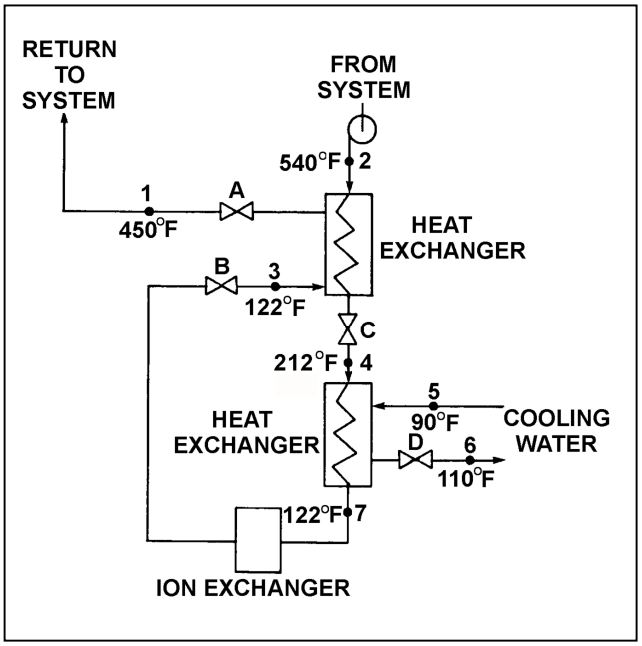

TOPIC: 191006
KNOWLEDGE: K1.07 [2.4/2.6]
QID: P3432 (B1331)

Refer to the drawing of an operating lube oil heat exchanger (see figure below).

Given the following information:

$\dot{m}_{oil}$ = 1.8 x 10^4 lbm/hr
$\dot{m}_{water}$ = 3.3 x 10^4 lbm/hr
$c_{p\text{-}oil}$ = 1.1 Btu/lbm-°F
$c_{p\text{-}water}$ = 1.0 Btu/lbm-°F
$T_{cw\text{-}in}$ = 90°F
$T_{cw\text{-}out}$ = 120°F
$T_{oil\text{-}in}$ = 170°F
$T_{oil\text{-}out}$ = ?

What is the approximate temperature of the lube oil exiting the heat exchanger ($T_{oil\text{-}out}$)?

A. 110°F

B. 120°F

C. 130°F

D. 140°F

ANSWER: B.

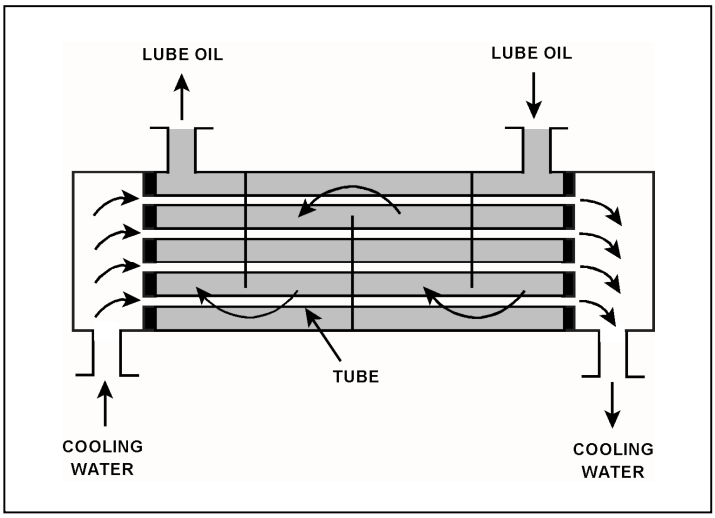

TOPIC: 191006
KNOWLEDGE: K1.07 [2.4/2.6]
QID: P3632 (B3631)

Refer to the drawing of an operating water cleanup system (see figure below).

If cooling water flow rate is 1.0 x 10^6 lbm/hr, what is the approximate water flow rate in the cleanup system?

A. 2.2 x 10^5 lbm/hr

B. 3.2 x 10^5 lbm/hr

C. 2.2 x 10^6 lbm/hr

D. 3.2 x 10^6 lbm/hr

ANSWER: A.

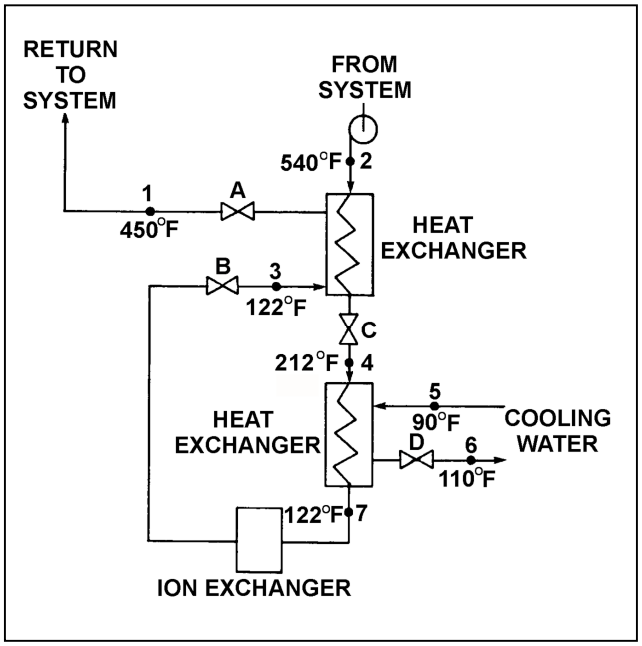

TOPIC: 191006
KNOWLEDGE: K1.07 [2.4/2.6]
QID: P3732 (B3732)

Refer to the drawing of a lube oil heat exchanger (see figure below).

The lube oil heat exchanger is in service with the following inlet temperatures:

Lube oil inlet temperature = 130°F
Cooling water inlet temperature = 70°F

Assume that cooling water mass flow rate is less than lube oil mass flow rate, and that both fluids have the same specific heat. Which one of the following pairs of heat exchanger outlet temperatures is not possible?

	Lube Oil Outlet Temp	Cooling Water Outlet Temp
A.	100°F	105°F
B.	105°F	105°F
C.	110°F	90°F
D.	115°F	90°F

ANSWER: C.

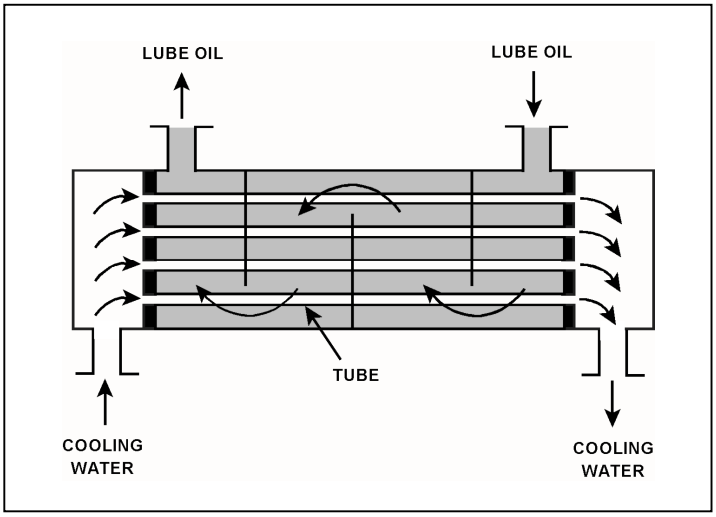

TOPIC: 191006
KNOWLEDGE: K1.07 [2.5/2.7]
QID: P3833 (B3832)

A main turbine-generator was operating at 80 percent load with the following initial steady-state lube oil and cooling water temperatures for the main turbine lube oil heat exchanger:

$T_{oil\ in}$ = 174°F
$T_{oil\ out}$ = 114°F
$T_{water\ in}$ = 85°F
$T_{water\ out}$ = 115°F

Six months later, the following current steady-state heat exchanger temperatures are observed:

$T_{oil\ in}$ = 177°F
$T_{oil\ out}$ = 111°F
$T_{water\ in}$ = 85°F
$T_{water\ out}$ = 115°F

Assume that the total heat exchanger heat transfer coefficient and the cooling water mass flow rate do not change, and that the specific heat values for the cooling water and lube oil do not change. Also assume that the lube oil system is a closed system.

Which one of the following could be responsible for the differences between the initial and current steady-state heat exchanger temperatures?

A. The current main turbine-generator load is lower than the initial load.

B. The current main turbine-generator load is higher than the initial load.

C. The current main turbine lube oil mass flow rate is less than the initial flow rate.

D. The current main turbine lube oil mass flow rate is greater than the initial flow rate.

ANSWER: C.

TOPIC: 191006
KNOWLEDGE: K1.07 [2.4/2.6]
QID: P4416 (B4416)

Refer to the drawing of a lube oil heat exchanger (see figure below).

The lube oil heat exchanger is in service with the following inlet temperatures:

Lube oil inlet temperature = 120°F
Cooling water inlet temperature = 60°F

Assuming that cooling water flow rate is greater than lube oil flow rate, which one of the following pairs of heat exchanger outlet temperatures is possible? (Assume both fluids have the same specific heat.)

	Lube Oil Outlet Temp	Cooling Water Outlet Temp
A.	90°F	100°F
B.	90°F	85°F
C.	95°F	100°F
D.	95°F	85°F

ANSWER: B.

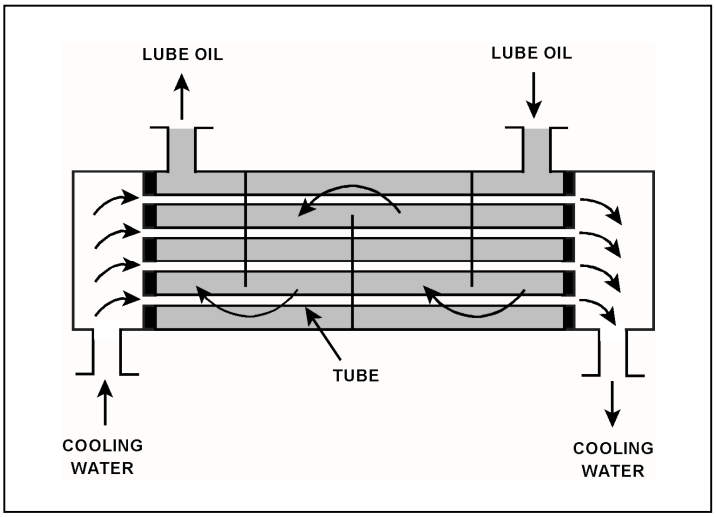

TOPIC: 191006
KNOWLEDGE: K1.07 [2.5/2.7]
QID: P5316 (B5317)

A main turbine-generator was operating at 80 percent load with the following initial steady-state lube oil and cooling water temperatures for the main turbine lube oil heat exchanger:

$T_{oil\ in}$ = 174°F
$T_{oil\ out}$ = 114°F
$T_{water\ in}$ = 85°F
$T_{water\ out}$ = 115°F

Six months later, the current steady-state heat exchanger temperatures are:

$T_{oil\ in}$ = 174°F
$T_{oil\ out}$ = 120°F
$T_{water\ in}$ = 85°F
$T_{water\ out}$ = 120°F

Assume that the lube oil mass flow rate does not change, and that the specific heat values for the cooling water and lube oil do not change. Also assume that the main turbine lube oil system is a closed system.

The differences between the initial and current steady-state heat exchanger temperatures could be caused by the current main turbine-generator load being _____ with the current heat exchanger cooling water mass flow rate being _____.

A. higher; lower

B. higher; higher

C. lower; lower

D. lower; higher

ANSWER: C.

TOPIC: 191006
KNOWLEDGE: K1.07 [2.4/2.6]
QID: P5516 (B5517)

Refer to the drawing of a lube oil heat exchanger (see figure below).

The lube oil heat exchanger is in service with the following inlet temperatures:

Lube oil inlet temperature = 130°F
Cooling water inlet temperature = 70°F

Given that cooling water mass flow rate is greater than lube oil mass flow rate, which one of the following pairs of heat exchanger outlet temperatures is not possible? (Assume both fluids have the same specific heat.)

	Lube Oil Outlet Temp	Cooling Water Outlet Temp
A.	90°F	105°F
B.	90°F	100°F
C.	110°F	95°F
D.	110°F	85°F

ANSWER: C.

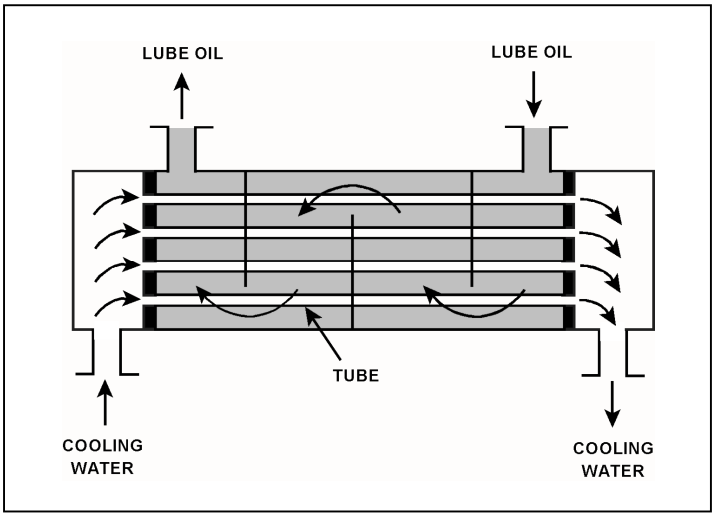

TOPIC: 191006
KNOWLEDGE: K1.07 [2.4/2.6]
QID: P5616 (B5617)

Refer to the drawing of an operating lube oil heat exchanger (see figure below).

Assume that the inlet lube oil and inlet cooling water temperatures are constant and the lube oil flow rate remains the same. If the cooling water flow rate increases, the lube oil outlet temperature will _____; and the cooling water outlet temperature will _____.

A. increase; increase

B. increase; decrease

C. decrease; increase

D. decrease; decrease

ANSWER: D.

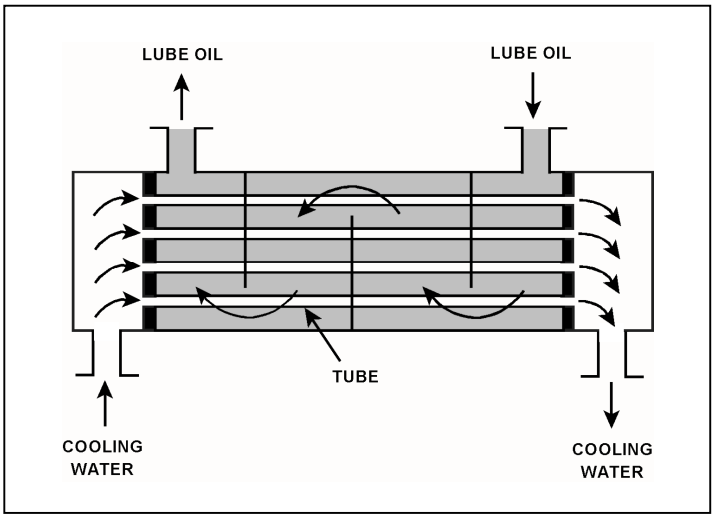

TOPIC: 191006
KNOWLEDGE: K1.07 [2.4/2.6]
QID: P5716 (B5716)

Refer to the drawing of an operating parallel-flow lube oil heat exchanger (see figure below). Assume that lube oil (LO) inlet temperature is greater than cooling water (CW) inlet temperature.

Unlike a counter-flow heat exchanger, in a parallel-flow heat exchanger the _____ temperature can never be greater than the _____ temperature.

A. LO outlet; CW inlet

B. LO outlet; CW outlet

C. CW outlet; LO inlet

D. CW outlet; LO outlet

ANSWER: D.

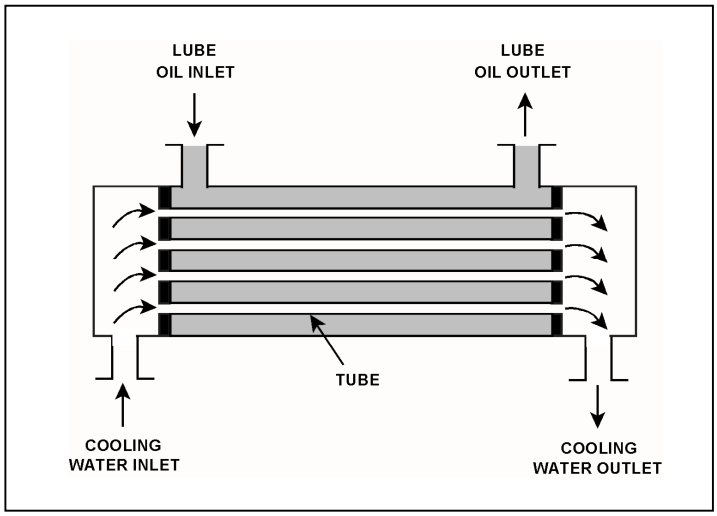

TOPIC: 191006
KNOWLEDGE: K1.07 [2.4/2.6]
QID: P5916 (B5917)

Refer to the drawing of an operating process water cleanup system (see figure below).

Assume there is no heat loss from the process water cleanup system to the surroundings and the process water flow rate does not change. If valve D closes fully, what will be the final steady-state temperature of the process water flowing through the filter?

A. 212°F

B. 302°F

C. 450°F

D. 540°F

ANSWER: D.

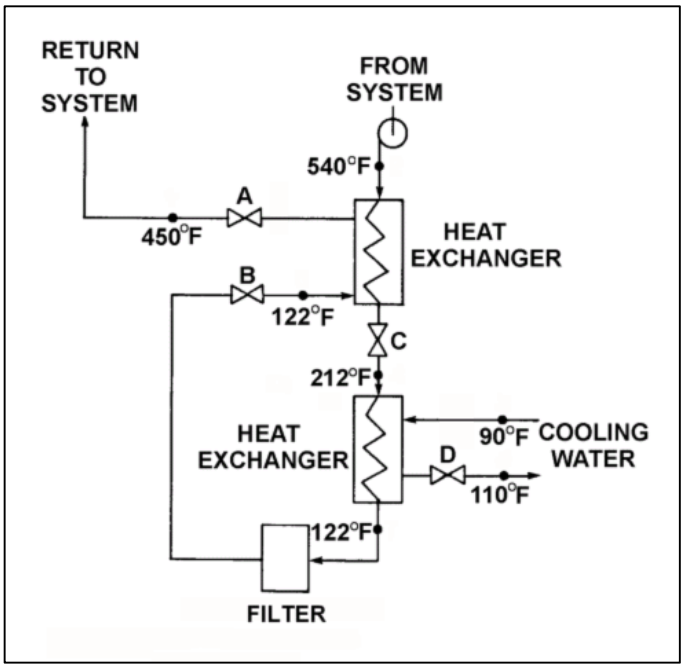

TOPIC: 191006
KNOWLEDGE: K1.07 [2.4/2.6]
QID: P6116 (B6143)

A counter-flow heat exchanger is being used to cool the lube oil for a main turbine and generator.

The main turbine and generator was initially operating at 100 percent load with the following stable heat exchanger conditions:

$T_{oil\ in}$ = 174°F
$T_{oil\ out}$ = 114°F
$T_{water\ in}$ = 85°F
$T_{water\ out}$ = 115°F

Main turbine and generator load was reduced, and the heat exchanger cooling water mass flow rate was decreased to one-half of its initial value, resulting in the following stable current conditions:

$T_{oil\ in}$ = 178°F
$T_{oil\ out}$ = 138°F
$T_{water\ in}$ = 85°F
$T_{water\ out}$ = ?

Assume that the lube oil mass flow rate and the specific heats of both fluids did <u>not</u> change.

Which one of the following is the current cooling water outlet temperature?

A. 115°F

B. 125°F

C. 135°F

D. 145°F

ANSWER: B.

TOPIC: 191006
KNOWLEDGE: K1.07 [2.4/2.6]
QID: P6516 (B6516)

Refer to the drawing of a heat exchanger (see figure below).

The heat exchanger is in service with the following inlet temperatures:

Service water inlet temperature = 130°F
Cooling water inlet temperature = 70°F

Assume that both fluids have the same specific heat, and that service water mass flow rate is greater than cooling water mass flow rate. Which one of the following pairs of heat exchanger outlet temperatures is possible?

	Service Water Outlet Temp.	Cooling Water Outlet Temp.
A.	120°F	82°F
B.	110°F	90°F
C.	100°F	98°F
D.	90°F	106°F

ANSWER: A.

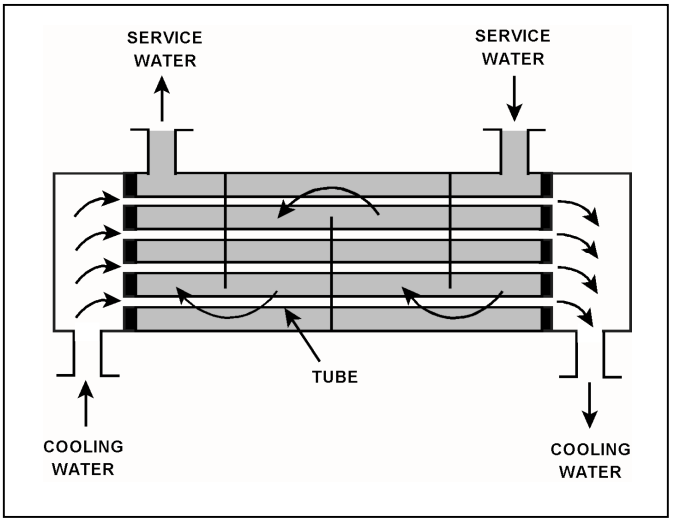

TOPIC: 191006
KNOWLEDGE: K1.07 [2.4/2.6]
QID: P7016 (B7017)

Given the following parameter values for a feedwater heater:

Feedwater inlet temperature = 320°F
Feedwater inlet pressure = 1,000 psia
Feedwater mass flow rate = 1.0×10^6 lbm/hr
Extraction steam pressure = 500 psia

Assume that the extraction steam enters the heater as a dry saturated vapor and leaves the heater as a saturated liquid at 500 psia.

Which one of the following is the approximate mass flow rate of extraction steam required to increase feedwater temperature to 380°F?

A. 5.2×10^4 lbm/hr

B. 7.9×10^4 lbm/hr

C. 8.4×10^4 lbm/hr

D. 8.9×10^4 lbm/hr

ANSWER: C.

TOPIC: 191006
KNOWLEDGE: K1.07 [2.4/2.6]
QID: P7316 (B7316)

Refer to the drawing of an operating parallel-flow lube oil heat exchanger (see figure below).

Unlike a counter-flow heat exchanger, in the parallel-flow heat exchanger the _____ temperature will always be greater than the _____ temperature.

A. CW outlet; LO inlet

B. CW outlet; LO outlet

C. LO outlet; CW inlet

D. LO outlet; CW outlet

ANSWER: D.

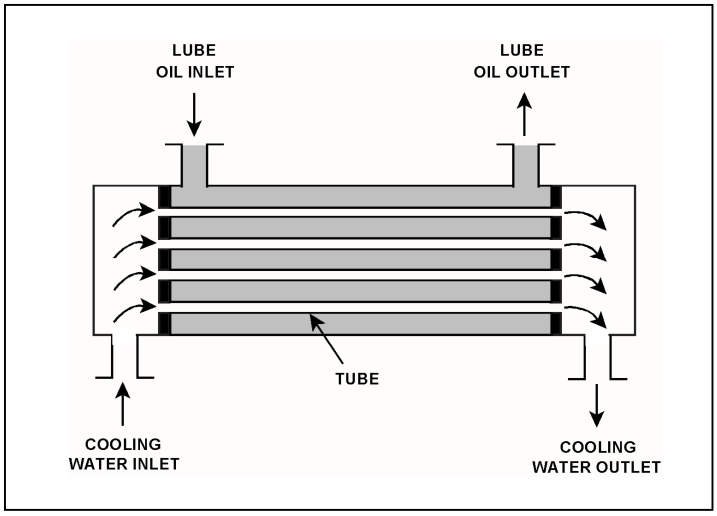

TOPIC: 191006
KNOWLEDGE: K1.07 [2.4/2.6]
QID: P7516 (B7517)

Refer to the drawing of a heat exchanger (see figure below).

The heat exchanger is in service with the following inlet temperatures:

Cooling water inlet temperature = 70°F
Service water inlet temperature = 130°F

Assume that both fluids have the same specific heat, and that cooling water mass flow rate is greater than service water mass flow rate. Which one of the following pairs of heat exchanger outlet temperatures is not possible?

	Cooling Water Outlet Temp.	Service Water Outlet Temp.
A.	78°F	120°F
B.	90°F	110°F
C.	98°F	100°F
D.	100°F	90°F

ANSWER: B.

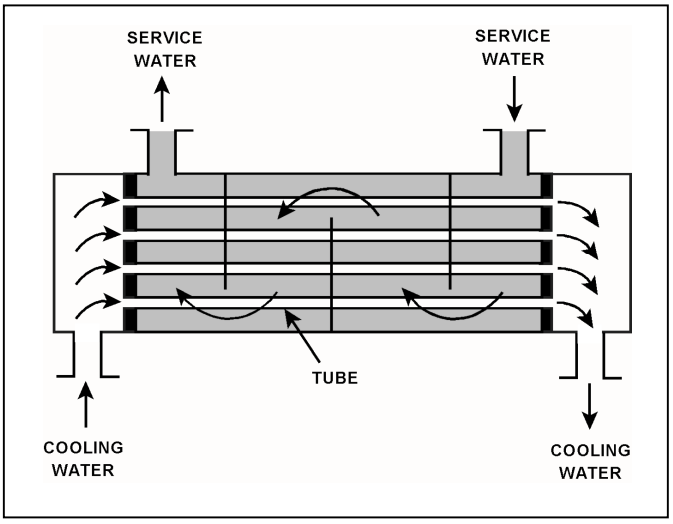

TOPIC: 191006
KNOWLEDGE: K1.07 [2.4/2.6]
QID: P7676 (B7676)

Which one of the following will increase the heat transfer rate between two liquids in a heat exchanger? (Assume single-phase conditions and a constant specific heat for both liquids.)

A. The mass flow rate of the hotter liquid decreases by 10 percent.

B. The mass flow rate of the colder liquid decreases by 10 percent.

C. The inlet temperature of the hotter liquid increases by 20°F.

D. The inlet temperature of the colder liquid increases by 20°F.

ANSWER: C.

TOPIC: 191006
KNOWLEDGE: K1.09 [2.8/2.8]
QID: P31

Severe stress in a mechanical component, induced by a sudden, unequally distributed temperature reduction is a description of...

A. fracture stress.

B. brittle fracture.

C. thermal shock.

D. pressurized thermal shock.

ANSWER: C.

TOPIC: 191006
KNOWLEDGE: K1.09 [2.8/2.8]
QID: P233

The major thermodynamic concern resulting from rapidly cooling a reactor vessel is...

A. thermal shock.

B. stress corrosion.

C. loss of shutdown margin.

D. loss of subcooling margin.

ANSWER: A.

TOPIC: 191006
KNOWLEDGE: K1.09 [2.8/2.8]
QID: P2832 (B633)

Steam has been admitted to a main condenser for 25 minutes with no cooling water flow. Initiating full cooling water flow rate at this time will...

A. reduce the stress on the condenser shell by rapidly cooling the shell.

B. reduce the stress on the condenser tubes by rapidly cooling the tubes.

C. induce large thermal stresses on the condenser shell.

D. induce large thermal stresses on the junctions between the condenser tubes and the tubesheet.

ANSWER: D.

TOPIC: 191006
KNOWLEDGE: K1.12 [2.5/2.7]
QID: P32 (B1234)

Refer to the drawing of an operating lube oil heat exchanger (see figure below).

If scaling occurs inside the cooling water tubes, cooling water outlet temperature will _____; and lube oil outlet temperature will _____. (Assume the lube oil and cooling water flow rates do not change.)

A. decrease; decrease

B. decrease; increase

C. increase; decrease

D. increase; increase

ANSWER: B.

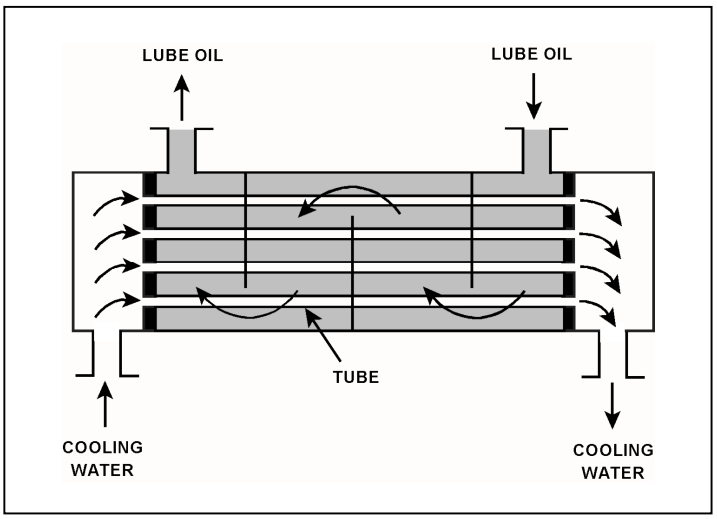

TOPIC: 191006
KNOWLEDGE: K1.12 [2.5/2.7]
QID: P105

Which one of the following will occur to reduce the heat transfer rate in a parallel-flow heat exchanger as scaling increases on the exterior surface of the tubes?

A. Flow rate through the tubes will decrease.

B. Surface area of the tubes will decrease.

C. Thermal conductivity of the tubes will decrease.

D. Delta-T across the tubes will decrease.

ANSWER: C.

TOPIC: 191006
KNOWLEDGE: K1.12 [2.5/2.7]
QID: P331 (B332)

A nuclear power plant is operating at steady-state conditions with the main generator supplying 1,000 MW to the power grid. Assume main generator load remains constant.

If one percent of the tubes in the main condenser become plugged, condenser absolute pressure will _____; and condenser hotwell temperature will _____.

A. increase; increase

B. decrease; increase

C. increase; decrease

D. decrease; decrease

ANSWER: A.

TOPIC: 191006
KNOWLEDGE: K1.12 [2.5/2.7]
QID: P1285

A nuclear power plant was initially operating at steady-state 100 percent power with the following reactor coolant system (RCS) and steam generator (SG) parameters:

RCS average coolant temperature	=	575°F
RCS hot leg temperatures	=	600°F
RCS cold leg temperatures	=	550°F
SG pressures	=	885 psig

The reactor was shut down for a maintenance outage, during which 7 percent of the tubes in each SG were plugged. The reactor was restarted and power was ramped to 100 percent. To establish the same SG pressure at 100 percent power, RCS average coolant temperature will have to be increased to...

A. 578°F.

B. 580°F.

C. 582°F.

D. 584°F.

ANSWER: A.

TOPIC: 191006
KNOWLEDGE: K1.12 [2.5/2.7]
QID: P1685

A nuclear power plant with two steam generators (SGs) was initially operating at steady-state 90 percent power with the following SG and reactor coolant system (RCS) parameters:

RCS average coolant temperature	= 575°F
RCS hot leg temperatures	= 600°F
RCS cold leg temperatures	= 550°F
SG pressures	= 885 psig

The reactor was shut down for a maintenance outage, during which multiple tubes were plugged in each SG. The reactor was restarted with 98 percent of the RCS flow that existed prior to the outage.

If RCS hot leg temperatures are maintained at 600°F with the reactor at 90 percent power, the RCS cold leg temperatures will be...

A. 546°F.

B. 547°F.

C. 548°F.

D. 549°F.

ANSWER: D.

TOPIC: 191006
KNOWLEDGE: K1.12 [2.5/2.7]
QID: P2233 (B1833)

Refer to the drawing of an operating lube oil heat exchanger (see figure below).

If deposits accumulate on the outside of the cooling water tubes, cooling water outlet temperature will _____; and lube oil outlet temperature will _____. (Assume the lube oil and cooling water inlet temperatures and flow rates do not change.)

A. decrease; increase

B. decrease; decrease

C. increase; increase

D. increase; decrease

ANSWER: A.

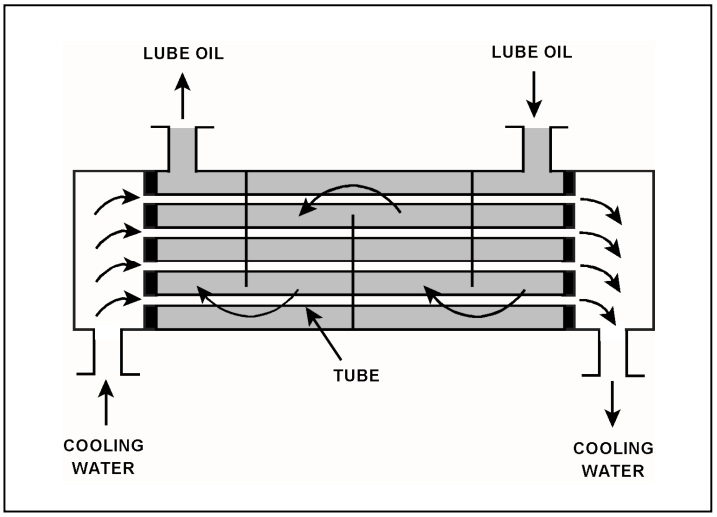

TOPIC: 191006
KNOWLEDGE: K1.12 [2.5/2.7]
QID: P3633 (B3635)

A main turbine-generator is operating at 80 percent load with the following initial steady-state temperatures for the main turbine lube oil heat exchanger:

$T_{oil\ in}$ = 174°F
$T_{oil\ out}$ = 114°F
$T_{water\ in}$ = 85°F
$T_{water\ out}$ = 115°F

After six months of main turbine-generator operation, the following final steady-state lube oil heat exchanger temperatures are observed:

$T_{oil\ in}$ = 179°F
$T_{oil\ out}$ = 119°F
$T_{water\ in}$ = 85°F
$T_{water\ out}$ = 115°F

Assume the final cooling water and lube oil flow rates are the same as the initial flow rates, and the specific heat values for the cooling water and lube oil do not change.

Which one of the following could be responsible for the differences between the initial and final heat exchanger steady-state temperatures?

A. The heat exchanger tubes have become fouled with scale.

B. The temperature of the cooling water source has increased.

C. The final main turbine-generator load is higher than the initial load.

D. The final main turbine-generator load is lower than the initial load.

ANSWER: A.

TOPIC: 191006
KNOWLEDGE: K1.12 [2.5/2.7]
QID: P4617 (B4616)

Refer to the drawing of two system curves for a main condenser cooling water system (see figure below).

Which one of the following will cause the system curve to shift from the solid curve toward the dashed curve?

A. The main condenser tubes are cleaned.

B. The main condenser tubes become increasingly fouled.

C. Cooling water flow rate is increased by 25 percent by starting an additional cooling water pump.

D. Cooling water flow rate is decreased by 25 percent by stopping one of the operating cooling water pumps.

ANSWER: A.

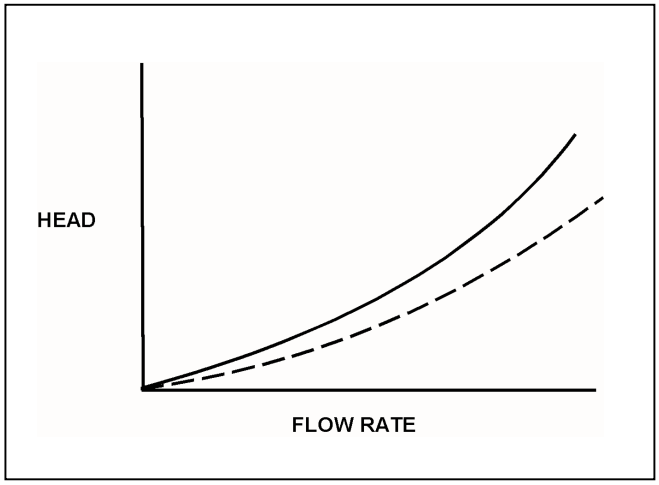

TOPIC: 191006
KNOWLEDGE: K1.12 [2.5/2.7]
QID: P5116 (B5117)

Refer to the drawing of two system curves for a typical main condenser cooling water system (see figure below).

Which one of the following will cause the system curve to shift from the solid curve toward the dashed curve?

A. The main condenser tubes are cleaned.

B. The main condenser tubes become increasingly fouled.

C. Cooling water system flow rate is increased by 25 percent by starting an additional cooling water pump.

D. Cooling water system flow rate is decreased by 25 percent by stopping one of the operating cooling water pumps.

ANSWER: B.

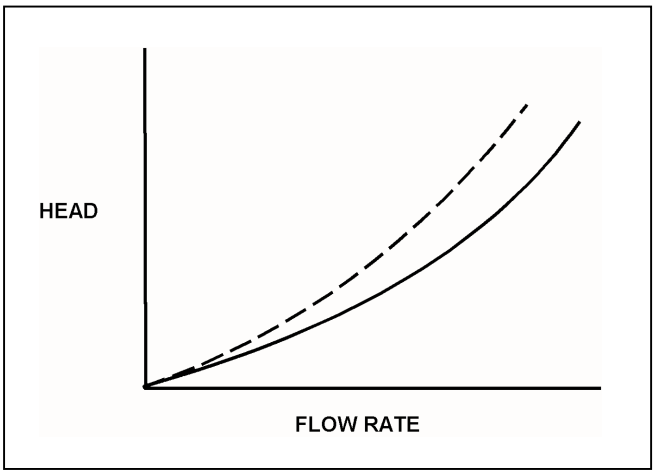

TOPIC: 191006
KNOWLEDGE: K1.12 [2.5/2.7]
QID: P6616 (B6617)

Refer to the drawing of an operating lube oil heat exchanger (see figure below).

If mineral deposits accumulate on the inside of the cooling water tubes, cooling water outlet temperature will _____; and lube oil outlet temperature will _____. (Assume the lube oil and cooling water inlet temperatures and flow rates do not change.)

A. increase; decrease

B. increase; increase

C. decrease; decrease

D. decrease; increase

ANSWER: D.

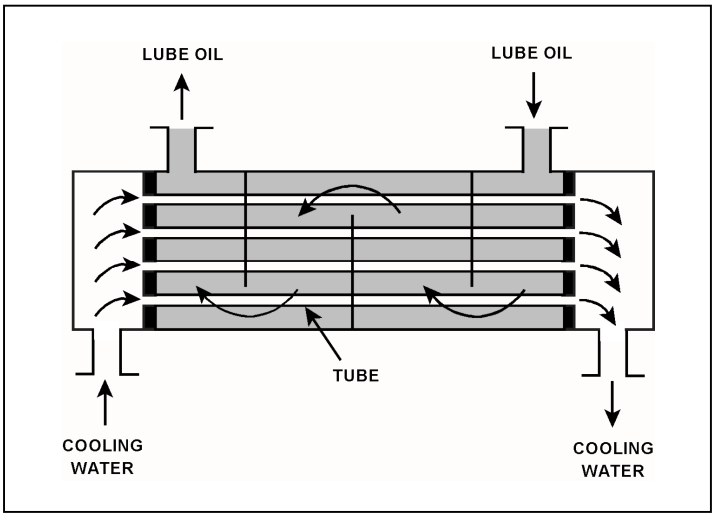

TOPIC: 191006
KNOWLEDGE: K1.12 [2.5/2.7]
QID: P7625 (B7625)

Refer to the drawing of an operating lube oil heat exchanger (see figure below).

The heat exchanger was initially placed in continuous service 6 months ago. During the 6-month period of operation, mineral deposits have accumulated inside the heat exchanger tubes.

The following parameters are currently stable at their initial values:

- Lube oil mass flow rate
- Lube oil inlet temperature
- Lube oil outlet temperature
- Cooling water inlet temperature

Compared to their initial values, the current cooling water outlet temperature is _____; and the current cooling water mass flow rate is _____.

A. lower; smaller

B. lower; greater

C. higher; greater

D. higher; smaller

ANSWER: B.

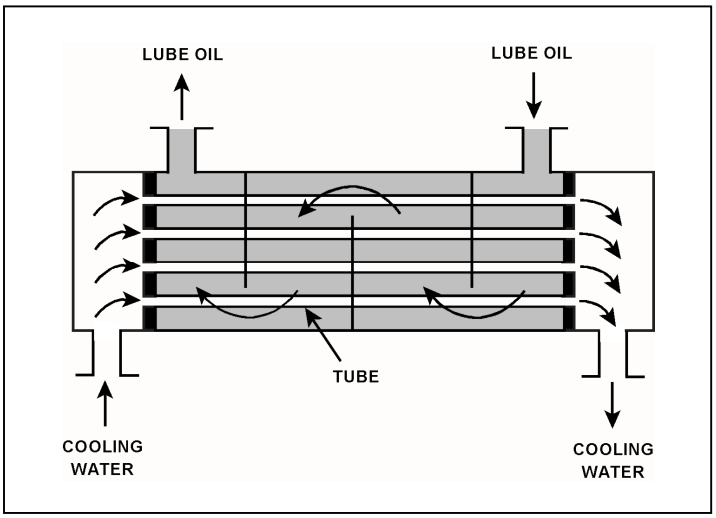

TOPIC: 191006
KNOWLEDGE: K1.13 [2.8/2.9]
QID: P33

Borated water is flowing through the tubes of a heat exchanger being cooled by fresh water. The shell side pressure is less than tube side pressure. What will occur as a result of a tube failure?

A. Shell side pressure will increase and the borated water system will be diluted.

B. Shell side pressure will decrease and the borated water inventory will be depleted.

C. Shell side pressure will increase and the borated water inventory will be depleted.

D. Shell side pressure will decrease and the borated water system will be diluted.

ANSWER: C.

TOPIC: 191006
KNOWLEDGE: K1.13 [2.8/2.9]
QID: P234 (B3535)

Refer to the drawing of an operating cooling water system (see figure below).

Which one of the following effects will occur because of the failed tube in the heat exchanger?

A. Level in the surge tank will increase.

B. Flow in the low pressure (LP) system will reverse.

C. Pressure in the low pressure (LP) system will decrease.

D. Low pressure (LP) fluid heat exchanger outlet temperature will decrease.

ANSWER: D.

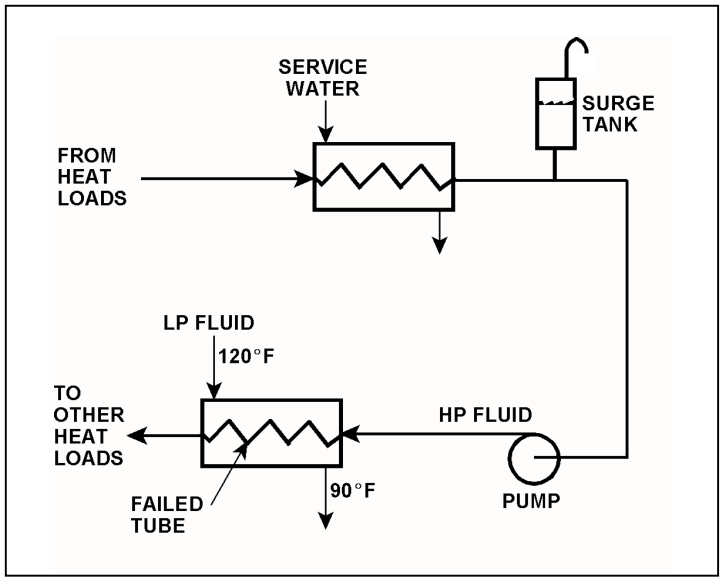

TOPIC: 191006
KNOWLEDGE: K1.13 [2.8/2.9]
QID: P333 (B333)

A nuclear power plant is operating normally at 50 percent power. Which one of the following will result from a cooling water tube rupture in the main condenser?

A. Increased condenser vacuum.

B. Increased conductivity of the condensate.

C. Decreased condensate pump available net positive suction head.

D. Decreased condensate pump flow rate.

ANSWER: B.

TOPIC: 191006
KNOWLEDGE: K1.13 [2.8/2.9]
QID: P1134 (B1931)

With a nuclear power plant operating at 50 percent power, which one of the following will occur as a result of multiple tube leaks in the main condenser? (Assume that main condenser vacuum does <u>not</u> change.)

A. Condensate depression will decrease.

B. Condensate conductivity will increase.

C. Condensate oxygen concentration will decrease.

D. Condenser inlet cooling water flow rate will decrease.

ANSWER: B.

TOPIC: 191006
KNOWLEDGE: K1.13 [2.8/2.9]
QID: P1234 (B1535)

Refer to the drawing of an operating cooling water system (see figure below).

Which one of the following will occur as a result of the indicated tube failure in the heat exchanger?

A. High pressure (HP) fluid inventory increases.

B. Pressure in the low pressure (LP) system decreases.

C. Temperature in the low pressure (LP) system increases.

D. Level in the surge tank decreases.

ANSWER: D.

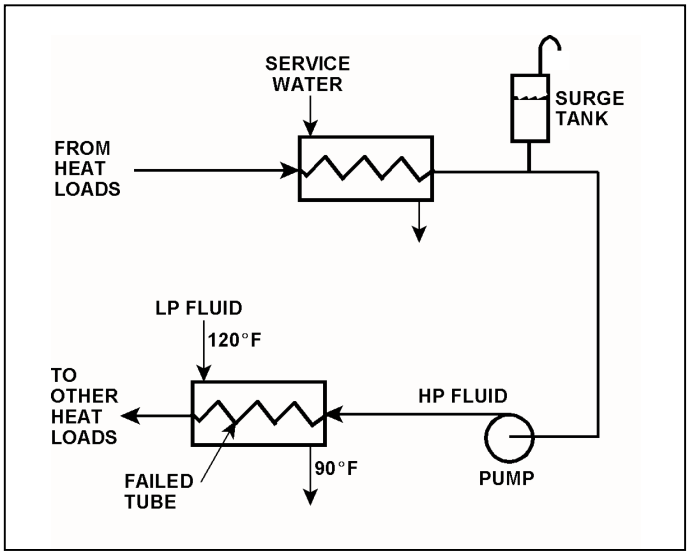

TOPIC: 191006
KNOWLEDGE: K1.13 [2.8/2.9]
QID: P4917 (B4918)

A nuclear power plant was initially operating at steady-state 50 percent power with 50 gpm of main condenser cooling water inleakage through a cooling water tube rupture. Power was then increased, and is currently stable at 60 percent.

Assume the size of the cooling water tube rupture does not change, and the main condenser cooling water inlet pressure and inlet temperature do not change.

When compared to the flow rate of main condenser cooling water inleakage at 50 percent power, the flow rate of cooling water inleakage at 60 percent power is _____ because the main condenser pressure at 60 percent power is _____.

A. higher; lower

B. higher; higher

C. lower; lower

D. lower; higher

ANSWER: D.

TOPIC: 191006
KNOWLEDGE: K1.14 [2.4/2.6]
QID: P1834 (B111)

During normal nuclear power plant operation, a main condenser develops an air leak which decreases vacuum at a rate of 1.0 inch Hg/min. Which one of the following will increase because of this condition? (Assume that main turbine steam inlet valve position does not change.)

A. Steam cycle efficiency.

B. Main turbine work output.

C. Condenser hotwell temperature.

D. Low pressure turbine exhaust steam moisture content.

ANSWER: C.

TOPIC: 191006
KNOWLEDGE: K1.14 [2.4/2.6]
QID: P1912 (B936)

During normal nuclear power plant operation, why does air entry into the main condenser reduce the thermodynamic efficiency of the steam cycle?

A. The rate of steam flow through the main turbine increases.

B. The condensate subcooling in the main condenser decreases.

C. The enthalpy of the low pressure turbine exhaust increases.

D. The air mixes with the steam and enters the condensate.

ANSWER: C.

TOPIC: 191006
KNOWLEDGE: K1.14 [2.4/2.6]
QID: P2634 (B2633)

A nuclear power plant is operating at steady-state 100 percent power. Assuming that condenser cooling water inlet temperature and flow rate do <u>not</u> change, if main condenser vacuum <u>decreases</u>, condensate temperature will...

A. increase, because condensate subcooling has decreased.

B. increase, because condenser saturation pressure has increased.

C. decrease, because condensate subcooling has increased.

D. decrease, because condenser saturation pressure has decreased.

ANSWER: B.

TOPIC: 191006
KNOWLEDGE: K1.14 [2.4/2.6]
QID: P3534 (B2736)

A nuclear power plant is operating at steady-state 100 percent power when air inleakage causes main condenser vacuum to decrease from 28 inches Hg vacuum to 27 inches Hg vacuum. Assume the main steam inlet pressure, inlet quality, and mass flow rate through the main turbine do not change, and the condenser cooling water inlet temperature and mass flow rate do not change.

When the plant stabilizes, turbine exhaust quality will be _____; and turbine exhaust temperature will be _____.

A. higher; higher

B. higher; lower

C. lower; higher

D. lower; lower

ANSWER: A.

TOPIC: 191006
KNOWLEDGE: K1.14 [2.4/2.6]
QID: P3734 (B3777)

A nuclear power plant is operating near rated power with the following initial conditions:

Main steam pressure = 900 psia
Main steam quality = 100 percent, saturated vapor
Main condenser pressure = 1.0 psia

Air leakage into the main condenser results in the main condenser pressure increasing and stabilizing at 2.0 psia. Assume that all main steam parameters (e.g., pressure, quality, and mass flow rate) remain the same and that the main turbine efficiency remains at 100 percent.

Which one of the following is the percent by which the main generator MW output will decrease as a result of the main condenser pressure increase?

A. 5.0 percent

B. 6.3 percent

C. 7.5 percent

D. 8.8 percent

ANSWER: C.

TOPIC: 191006
KNOWLEDGE: K1.14 [2.4/2.6]
QID: P4016 (B4018)

Refer to the drawing of an operating lube oil heat exchanger (see figure below).

The heat exchanger is operating with the following initial parameters:

Cooling water inlet temperature ($T_{cw\text{-}in}$) = 75°F
Cooling water outlet temperature ($T_{cw\text{-}out}$) = 95°F
Oil inlet temperature ($T_{oil\text{-}in}$) = 150°F
Oil outlet temperature ($T_{oil\text{-}out}$) = 120°F

Air introduction to the heat exchanger results in some of the heat exchanger tubes becoming uncovered. As a result, $T_{cw\text{-}out}$ decreases to 91°F. Assume the inlet temperatures, mass flow rates, and specific heats of both fluids do <u>not</u> change.

Which one of the following will be the resulting temperature of the lube oil exiting the heat exchanger ($T_{oil\text{-}out}$)?

A. 126°F

B. 130°F

C. 134°F

D. 138°F

ANSWER: A.

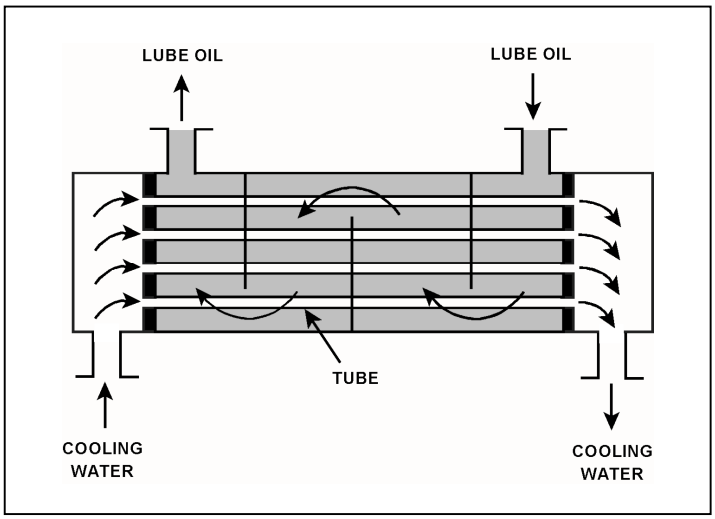

TOPIC: 191006
KNOWLEDGE: K1.14 [2.4/2.6]
QID: P4517 (B2832)

Refer to the drawing of an operating lube oil heat exchanger (see figure below).

Given the following initial parameters:

Cooling water inlet temperature ($T_{cw\text{-}in}$) = 75°F
Cooling water outlet temperature ($T_{cw\text{-}out}$) = 105°F
Oil inlet temperature ($T_{oil\text{-}in}$) = 140°F
Oil outlet temperature ($T_{oil\text{-}out}$) = 100°F

Air introduction to the heat exchanger results in some of the heat exchanger tubes becoming uncovered. As a result, $T_{cw\text{-}out}$ decreases to 99F. Assume that the mass flow rate and specific heat of both fluids remain the same, and that Toil-in does not change. Which one of the following will be the approximate temperature of the lube oil exiting the heat exchanger ($T_{oil\text{-}out}$)?

A. 99°F

B. 108°F

C. 116°F

D. 122°F

ANSWER: B.

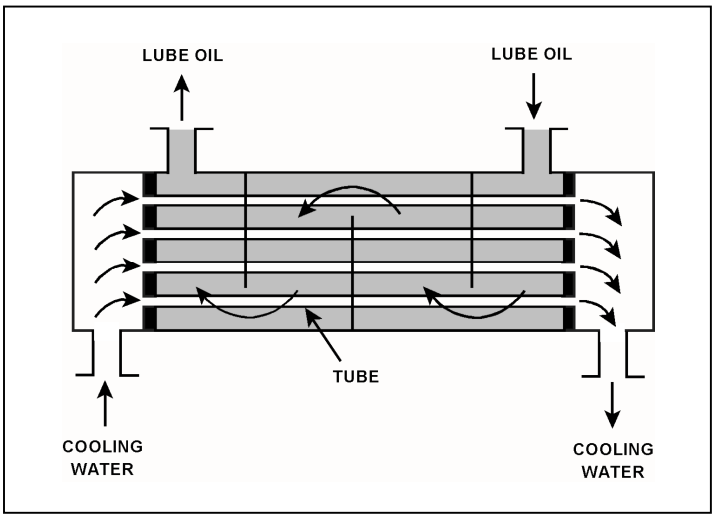

TOPIC: 191006
KNOWLEDGE: K1.14 [2.4/2.6]
QID: P4816 (B4817)

Refer to the drawing of an operating lube oil heat exchanger (see figure below).

The heat exchanger is operating with the following initial parameters:

Cooling water inlet temperature ($T_{cw\text{-}in}$) = 75°F
Cooling water outlet temperature ($T_{cw\text{-}out}$) = 95°F
Oil inlet temperature ($T_{oil\text{-}in}$) = 150°F
Oil outlet temperature ($T_{oil\text{-}out}$) = 110°F

Air leakage into the heat exchanger causes some of the heat exchanger tubes to become uncovered. As a result, $T_{cw\text{-}out}$ decreases to 89°F. Assume the inlet temperatures, mass flow rates, and specific heats of both fluids do <u>not</u> change.

Which one of the following will be the resulting temperature of the lube oil exiting the heat exchanger ($T_{oil\text{-}out}$)?

A. 116°F

B. 122°F

C. 130°F

D. 138°F

ANSWER: B.

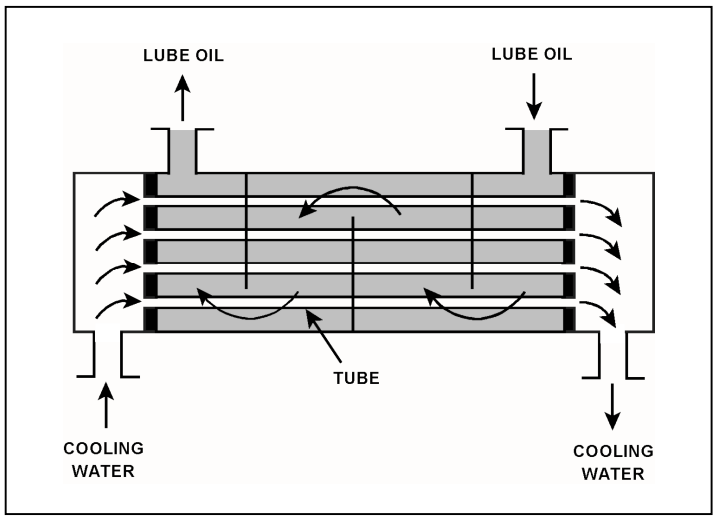

TOPIC: 191006
KNOWLEDGE: K1.14 [2.4/2.6]
QID: P5417 (B5418)

Refer to the drawing of an operating lube oil heat exchanger (see figure below).

The heat exchanger was operating with the following initial parameters:

Cooling water inlet temperature ($T_{cw\text{-}in}$) = 71°F
Cooling water outlet temperature ($T_{cw\text{-}out}$) = 91°F
Oil inlet temperature ($T_{oil\text{-}in}$) = 175°F
Oil outlet temperature ($T_{oil\text{-}out}$) = 125°F

The heat exchanger was vented, resulting in the following current parameters:

Cooling water inlet temperature ($T_{cw\text{-}in}$) = 71°F
Cooling water outlet temperature ($T_{cw\text{-}out}$) = 95°F
Oil inlet temperature ($T_{oil\text{-}in}$) = 175°F
Oil outlet temperature ($T_{oil\text{-}out}$) = ?

Assume that the mass flow rates and specific heats of both fluids were unchanged.

Which one of the following is the <u>current</u> lube oil outlet temperature ($T_{oil\text{-}out}$)?

A. 115°F

B. 120°F

C. 130°F

D. 135°F

ANSWER: A.

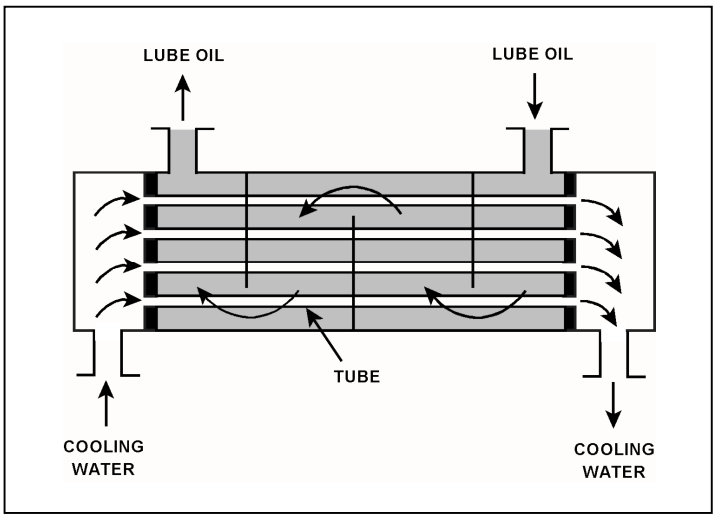

TOPIC: 191007
KNOWLEDGE: K1.01 [2.3/2.5]
QID: P935 (B737)

A demineralizer is being used in a water purification system. How will the accumulation of suspended solids in the demineralizer affect the performance of the demineralizer?

A. The rate of resin depletion will increase.

B. The flow rate of water through the demineralizer will increase.

C. The differential pressure across the demineralizer will decrease.

D. The rate of unwanted ion removal from the system will decrease.

ANSWER: D.

TOPIC: 191007
KNOWLEDGE: K1.01 [2.3/2.5]
QID: P1035

A sudden increase in the conductivity of water at the outlet of a demineralizer may result from...

A. increased demineralizer flow rate.

B. reduced demineralizer inlet temperature.

C. increased demineralizer effluent pressure.

D. reduced demineralizer inlet conductivity.

ANSWER: A.

TOPIC: 191007
KNOWLEDGE: K1.01 [2.3/2.5]
QID: P1535 (B1138)

A condensate demineralizer differential pressure (D/P) gauge indicates 4.0 psid at 50% flow rate. Over the next two days plant power changes have caused condensate flow rate to vary between 25% and 100%.

Which one of the following combinations of condensate flow rate and demineralizer D/P, observed during the power changes, indicates an increase in the accumulation of insoluble corrosion products in the demineralizer?

	Condensate Flow Rate	Demineralizer D/P (psid)
A.	100%	15.0
B.	75%	9.0
C.	60%	5.0
D.	25%	2.0

ANSWER: D.

TOPIC: 191007
KNOWLEDGE: K1.01 [2.3/2.5]
QID: P1736 (B1736)

A condensate demineralizer differential pressure (D/P) gauge indicates 6.0 psid at 50% flow rate. Which one of the following combinations of condensate flow rate and demineralizer D/P observed at various power levels over the next few days indicates an increase in the accumulation of insoluble corrosion products in the demineralizer?

	Condensate Flow Rate	Demineralizer D/P (psid)
A.	100%	23.5
B.	75%	16.5
C.	60%	8.5
D.	25%	1.5

ANSWER: B.

TOPIC: 191007
KNOWLEDGE: K1.01 [2.3/2.5]
QID: P2035 (B1237)

Which one of the following conditions may lead to channeling in an operating demineralizer?

A. Suspended solids forming a mat on the surface layer of the resin bed.

B. A sudden 10°F decrease in the temperature of the influent to the demineralizer.

C. Exhaustion of the resin bed due to high conductivity of the demineralizer influent.

D. Operation of the demineralizer with influent flow rate at 10 percent below design flow rate.

ANSWER: A.

TOPIC: 191007
KNOWLEDGE: K1.01 [2.3/2.5]
QID: P2135 (B637)

High differential pressure in a demineralizer could be caused by all of the following except...

A. resin exhaustion.

B. resin overheating.

C. crud buildup.

D. high flow rate.

ANSWER: A.

TOPIC: 191007
KNOWLEDGE: K1.01 [2.3/2.5]
QID: P2235 (B2638)

A condensate demineralizer differential pressure (D/P) gauge indicates 4.0 psid at 50% flow rate. Which one of the following combinations of condensate flow and demineralizer D/P observed at various power levels over the next few days indicates an increase in the accumulation of insoluble corrosion products in the demineralizer?

	Condensate Flow Rate	Demineralizer D/P (psid)
A.	25%	0.9
B.	60%	6.3
C.	75%	8.7
D.	100%	15.6

ANSWER: B.

TOPIC: 191007
KNOWLEDGE: K1.01 [2.3/2.5]
QID: P2335 (B2338)

A condensate demineralizer differential pressure (D/P) gauge indicates 4.0 psid at 50% flow rate. Over the next two days plant power changes have caused condensate flow rate to vary between 25% and 100%.

Which one of the following combinations of condensate flow and demineralizer D/P, observed during the power changes, indicates an increase in the accumulation of insoluble corrosion products in the demineralizer?

	Condensate Flow Rate	Demineralizer D/P (psid)
A.	100%	15.0
B.	75%	9.0
C.	40%	3.0
D.	25%	1.0

ANSWER: C.

TOPIC: 191007
KNOWLEDGE: K1.03 [2.2/2.5]
QID: P535 (B39)

Which one of the following is an indication of resin exhaustion in a demineralizer?

A. An increase in suspended solids in the effluent.

B. A decrease in the flow rate through the demineralizer.

C. An increase in the conductivity of the effluent.

D. An increase in the differential pressure across the demineralizer.

ANSWER: C.

TOPIC: 191007
KNOWLEDGE: K1.03 [2.2/2.5]
QID: P835 (B839)

The decontamination factor for ionic impurities of a demineralizer can be expressed as...

A. Inlet Conductivity minus Outlet Conductivity.

B. Outlet Conductivity minus Inlet Conductivity.

C. Inlet Conductivity divided by Outlet Conductivity.

D. Outlet Conductivity divided by Inlet Conductivity.

ANSWER: C.

TOPIC: 191007
KNOWLEDGE: K1.03 [2.2/2.5]
QID: P936

The ion exchange efficiency of a condensate demineralizer is determined by performing a calculation using the...

A. change in conductivity at the outlet of the demineralizer over a period of time.

B. change in pH at the outlet of the demineralizer over a period of time.

C. demineralizer inlet and outlet conductivity.

D. demineralizer inlet and outlet pH.

ANSWER: C.

TOPIC: 191007
KNOWLEDGE: K1.03 [2.2/2.5]
QID: P1735

Which one of the following is an indication that a demineralizer resin has become exhausted?

A. Decreased demineralizer process water flow rate.

B. Decreased demineralizer influent conductivity.

C. Decreased demineralizer differential pressure.

D. Decreased demineralizer decontamination factor.

ANSWER: D.

TOPIC: 191007
KNOWLEDGE: K1.03 [2.2/2.5]
QID: P1835

The ion exchange efficiency of a condensate demineralizer can be calculated using the values for demineralizer inlet and outlet...

A. conductivity.

B. pH.

C. N-16 radioactivity.

D. pressure.

ANSWER: A.

TOPIC: 191007
KNOWLEDGE: K1.03 [2.2/2.5]
QID: P2236 (B1437)

To determine the decontamination factor for ionic impurities of a demineralizer, the two parameters that must be monitored are inlet and outlet...

A. pH.

B. conductivity.

C. suspended solids.

D. pressure.

ANSWER: B.

TOPIC: 191007
KNOWLEDGE: K1.03 [2.2/2.5]
QID: P2735 (B2737)

What percentage of impurities is being removed from the water passing through an ion exchanger if the ion exchanger has a decontamination factor of 25?

A. 99 percent

B. 96 percent

C. 88 percent

D. 75 percent

ANSWER: B.

TOPIC: 191007
KNOWLEDGE: K1.03 [2.2/2.5]
QID: P3235 (B3238)

What percentage of ionic impurities is being removed from the water passing through an ion exchanger if the ion exchanger has a decontamination factor of 50?

A. 98 percent

B. 96 percent

C. 75 percent

D. 50 percent

ANSWER: A.

TOPIC: 191007
KNOWLEDGE: K1.03 [2.2/2.5]
QID: P3435 (B3437)

The decontamination factor of a condensate demineralizer has just been determined to be 50, based on conductivity measurements.

If condensate having a conductivity of 20 μmho/cm is flowing <u>into</u> this demineralizer, which one of the following is the conductivity of the condensate at the <u>outlet</u> of the demineralizer?

A. 0.4 μmho/cm

B. 1.0 μmho/cm

C. 4.0 μmho/cm

D. 10.0 μmho/cm

ANSWER: A.

TOPIC: 191007
KNOWLEDGE: K1.03 [2.2/2.5]
QID: P3636 (B3637)

The decontamination factor of a condensate demineralizer has just been determined to be 10, based on conductivity measurements.

If condensate having a conductivity of 20 μmho/cm is flowing <u>into</u> this demineralizer, which one of the following is the conductivity of the condensate at the <u>outlet</u> of the demineralizer?

A. 0.5 μmho/cm

B. 2.0 μmho/cm

C. 5.0 μmho/cm

D. 10.0 μmho/cm

ANSWER: B.

TOPIC: 191007
KNOWLEDGE: K1.03 [2.2/2.5]
QID: P4219 (B4219)

The decontamination factor of a condensate demineralizer has just been determined to be 5.0, based on conductivity measurements.

If condensate having a conductivity of 20 μmho/cm is flowing <u>into</u> this demineralizer, which one of the following is the conductivity of the condensate at the <u>outlet</u> of the demineralizer?

A. 0.4 μmho/cm

B. 4.0 μmho/cm

C. 10.0 μmho/cm

D. 100.0 μmho/cm

ANSWER: B.

TOPIC: 191007
KNOWLEDGE: K1.03 [2.2/2.5]
QID: P4718 (B4719)

What percentage of ionic impurities is being removed from the water passing through an ion exchanger if the ion exchanger has a decontamination factor of 1.0?

A. 100 percent

B. 99 percent

C. 1 percent

D. 0 percent

ANSWER: D.

TOPIC: 191007
KNOWLEDGE: K1.03 [2.2/2.5]
KNOWLEDGE: K1.06 [2.1/2.5]
QID: P5418

Two indications of channeling through an operating demineralizer are a _____-than-normal demineralizer differential pressure and a _____-than-normal decontamination factor for ionic impurities.

A. higher; lower

B. higher; higher

C. lower; lower

D. lower; higher

ANSWER: C.

TOPIC: 191007
KNOWLEDGE: K1.06 [2.1/2.5]
QID: P635 (B2237)

How does demineralizer differential pressure indicate the condition of a demineralizer resin bed?

A. Low differential pressure indicates flow blockage in the demineralizer.

B. Low differential pressure indicates that the demineralizer resin bed is exhausted.

C. High differential pressure indicates flow blockage in the demineralizer.

D. High differential pressure indicates that the demineralizer resin bed is exhausted.

ANSWER: C.

TOPIC: 191007
KNOWLEDGE: K1.06 [2.1/2.5]
QID: P836 (B539)

A lower-than-expected differential pressure across a mixed-bed demineralizer is an indication of...

A. depletion of the resin.

B. channeling through the resin bed.

C. improper resin regeneration.

D. a decrease in inlet conductivity.

ANSWER: B.

TOPIC: 191007
KNOWLEDGE: K1.06 [2.1/2.5]
QID: P1036 (B639)

As the operating time of a demineralizer resin bed increases, the differential pressure across the bed...

A. increases due to depletion of the resin ion exchange sites.

B. increases due to trapping of suspended solids.

C. decreases due to gradual resin breakdown.

D. decreases due to erosion of the resin ion exchange sites.

ANSWER: B.

TOPIC: 191007
KNOWLEDGE: K1.06 [2.1/2.5]
QID: P1136

Which one of the following will cause a large pressure drop across a demineralizer that is in operation?

A. Channeling of flow through the demineralizer.

B. Decrease in flow rate through the demineralizer.

C. Accumulation of suspended solids filtered by the resin beads.

D. Improper demineralizer venting after resin fill.

ANSWER: C.

TOPIC: 191007
KNOWLEDGE: K1.06 [2.1/2.5]
QID: P1236

An indication that a demineralizer resin bed is clogged is a...

A. large pressure drop across the bed.

B. high flow rate through the bed.

C. temperature rise in the effluent.

D. large conductivity increase across the bed.

ANSWER: A.

TOPIC: 191007
KNOWLEDGE: K1.06 [2.1/2.5]
QID: P1537 (B1539)

A higher-than-expected differential pressure across an operating demineralizer can be caused by...

A. exhaustion of the cation exchange resin.

B. channeling through the resin bed.

C. insufficient resin backwash.

D. decreased demineralizer inlet conductivity.

ANSWER: C.

TOPIC: 191007
KNOWLEDGE: K1.06 [2.1/2.5]
QID: P1836 (B337)

A fresh demineralizer that continuously processes water with a high concentration of suspended solids will first develop an increase in the...

A. conductivity at the demineralizer outlet.

B. decontamination factor of the demineralizer.

C. differential pressure across the demineralizer.

D. pH at the demineralizer outlet.

ANSWER: C.

TOPIC: 191007
KNOWLEDGE: K1.06 [2.1/2.5]
QID: P7645 (B7645)

Which one of the following describes a possible cause and effect associated with a lower-than-normal differential pressure across a demineralizer during otherwise normal system flow conditions?

A. The resin has developed low resistance flow paths, which can decrease the decontamination factor for the demineralizer.

B. The resin has developed low resistance flow paths, which can increase the decontamination factor for the demineralizer.

C. The resin has become compacted, which can reduce the flow rate through the demineralizer and decrease the decontamination factor for the demineralizer.

D. The resin has become compacted, which can reduce the flow rate through the demineralizer and increase the decontamination factor for the demineralizer.

ANSWER: A.

TOPIC: 191007
KNOWLEDGE: K1.08 [3.0/3.1]
QID: P1636 (B838)

Which one of the following, if processed through a demineralizer, will rapidly reduce the effectiveness of the demineralizer?

A. Oily water

B. Condensate

C. Makeup water

D. Radioactive water

ANSWER: A.

TOPIC: 191007
KNOWLEDGE: K1.08 [3.0/3.1]
QID: P2037

A nuclear power plant has been operating normally at 100 percent power for one month and with the same reactor coolant boron concentration for the last 24 hours.

Which one of the following changes associated with the in-service reactor coolant demineralizer will reduce the reactor coolant boron concentration in the demineralizer effluent?

A. Increase the temperature of the reactor coolant being processed from 95°F to 105°F.

B. Decrease the temperature of the reactor coolant being processed from 105°F to 95°F.

C. Increase the flow rate of reactor coolant being processed from 75 gpm to 100 gpm.

D. Decrease the flow rate of reactor coolant being processed from 75 gpm to 50 gpm.

ANSWER: B.

TOPIC: 191007
KNOWLEDGE: K1.08 [3.0/3.1]
QID: P2837

A nuclear power plant has two identical mixed resin reactor coolant ion exchangers, A and B, which operated in parallel service continuously for two weeks of power operation immediately after a refueling outage. Ion exchanger A was then removed from service while ion exchanger B remained in service. After 10 months of continuous operation at full power, it is necessary to place ion exchanger A in service and remove ion exchanger B from service.

Which one of the following describes why the effluent from ion exchanger A initially should be drained to a collection facility prior to placing the ion exchanger in full service?

A. To prevent a rapid increase in reactor coolant pH.

B. To prevent a rapid decrease in reactor coolant pH.

C. To prevent a rapid increase in reactor coolant boron concentration.

D. To prevent a rapid decrease in reactor coolant boron concentration.

ANSWER: C.

TOPIC: 191007
KNOWLEDGE: K1.08 [3.0/3.1]
QID: P2937

A nuclear power plant has been operating normally at 100 percent power for one month and with the same reactor coolant boron concentration for the last 24 hours.

Which one of the following changes associated with an in-service reactor coolant letdown demineralizer will increase the reactor coolant boron concentration in the demineralizer effluent?

A. Increase the temperature of the reactor coolant being processed from 95°F to 105°F.

B. Decrease the temperature of the reactor coolant being processed from 105°F to 95°F.

C. Increase the flow rate of reactor coolant being processed from 75 gpm to 100 gpm.

D. Decrease the flow rate of reactor coolant being processed from 75 gpm to 50 gpm.

ANSWER: A.

TOPIC: 191007
KNOWLEDGE: K1.08 [3.0/3.1]
QID: P5719

A mixed-bed ion exchanger is being used to process reactor coolant letdown. The ion exchanger is boron-saturated for the existing reactor coolant conditions.

If reactor coolant letdown temperature decreases by 20°F, the total number of boron atoms occupying the ion exchange sites will _____; and the boron concentration in the ion exchanger effluent will _____.

A. increase; decrease

B. increase; increase

C. decrease; decrease

D. decrease; increase

ANSWER: A.

TOPIC: 191007
KNOWLEDGE: K1.08 [3.2/3.1]
QID: P6018

A mixed-bed ion exchanger is being used to process reactor coolant letdown. The ion exchanger is boron-saturated for the existing reactor coolant conditions. Which one of the following describes a system change and resulting effect that will cause the boron concentration in the ion exchanger outlet water to be greater than the boron concentration in the inlet water?

A. An increase in reactor coolant ionic impurities with higher relative affinities for the resin exchange sites will displace borate ions from the resin exchange sites.

B. An increase in reactor coolant suspended solids with greater mass than the borate ions will mechanically remove borate ions from the resin exchange sites.

C. A decrease in the temperature of the inlet water will lower the relative affinity of the resin for the borate ions, which releases borate ions from the resin exchange sites.

D. A decrease in the flow rate through the ion exchanger will lower the retention capacity of the resin, which releases borate ions from the resin exchange sites.

ANSWER: A.

TOPIC: 191007
KNOWLEDGE: K1.08 [3.0/3.1]
QID: P6318

A mixed-bed ion exchanger is being used to process reactor coolant letdown. The ion exchanger is boron-saturated for the existing reactor coolant conditions.

Reactor coolant letdown temperature at the inlet to the ion exchanger increases by 15°F, while remaining within the normal temperature range. Because of the temperature increase, the total number of boron atoms occupying the ion exchange sites will _____; and the boron concentration in the ion exchanger effluent will _____.

A. increase; decrease

B. increase; increase

C. decrease; decrease

D. decrease; increase

ANSWER: D.

TOPIC: 191007
KNOWLEDGE: K1.08 [3.2/3.1]
QID: P7018

Reactor coolant system (RCS) purification mixed-bed ion exchanger A was removed from service and isolated after several weeks of operation when the RCS boron concentration was 900 ppm. Currently, with ion exchanger B in service, the RCS boron concentration is 450 ppm. If ion exchanger B is isolated and ion exchanger A is immediately returned to service, RCS boron concentration will...

A. remain the same because the resin in ion exchanger A has already become saturated with boron during previous operation.

B. remain the same because the resin in ion exchanger A has no affinity for the boron in the reactor coolant.

C. increase until the volume of water in ion exchanger A mixes completely with the RCS.

D. increase until the resin in ion exchanger A reaches equilibrium with the existing RCS boron concentration.

ANSWER: D.

TOPIC: 191007
KNOWLEDGE: K1.08 [3.2/3.1]
QID: P7218

A mixed-bed ion exchanger is being used to process reactor coolant letdown. The ion exchanger is boron-saturated for the existing reactor coolant conditions. Which one of the following describes a system change and resulting effect that will cause the boron concentration in the ion exchanger outlet water to be greater than the boron concentration in the inlet water?

A. An increase in the flow rate through the ion exchanger will lower the retention capacity of the resin, which releases borate ions from the resin exchange sites.

B. An increase in reactor coolant suspended solids with greater mass than the borate ions will mechanically remove borate ions from the resin exchange sites.

C. A decrease in the temperature of the inlet water will lower the relative affinity of the resin for the borate ions, which releases borate ions from the resin exchange sites.

D. A decrease in reactor coolant boron concentration will cause captured borate ions to be released to re-establish chemical equilibrium at the resin exchange sites.

ANSWER: D.

TOPIC: 191007
KNOWLEDGE: K1.09 [2.5/2.7]
QID: P34

What is the reason for bypassing a demineralizer due to high temperature?

A. Resins expand and restrict flow through the demineralizer.

B. Resins decompose and restrict flow through the demineralizer.

C. Resins decompose and create preferential flowpaths through the demineralizer.

D. Resins decompose and release resin particles into the flow.

ANSWER: D.

TOPIC: 191007
KNOWLEDGE: K1.09 [2.5/2.7]
QID: P235 (B1838)

When a mixed-bed demineralizer resin is exhausted, the resin should be replaced or regenerated because...

A. ions previously removed by the resin will be released into solution.

B. the resin will fracture and particles may escape through the retention screens.

C. particles previously filtered out of solution will be released.

D. the resin will physically bond together, thereby causing flow blockage.

ANSWER: A.

TOPIC: 191007
KNOWLEDGE: K1.09 [2.5/2.7]
QID: P236

A demineralizer that has been exposed to excessively _____ should be bypassed because the resin beads may release previously removed ions.

A. high flow rate

B. low flow rate

C. high temperature

D. low temperature

ANSWER: C.

TOPIC: 191007
KNOWLEDGE: K1.09 [2.5/2.7]
QID: P2637 (B239)

A result of proper demineralizer operation on water with ionic impurities is that the exiting water will always have a...

A. higher pH.

B. lower pH.

C. higher conductivity.

D. lower conductivity.

ANSWER: D.

TOPIC: 191007
KNOWLEDGE: K1.09 [2.5/2.7]
QID: P7606 (B7606)

A mixed-bed ion exchanger is being used to process reactor coolant. The ion exchanger has been in service for 6 months at 100 percent power. A temperature controller malfunction causes the ion exchanger influent temperature to exceed the resin's maximum temperature limit before being manually restored to normal. Ion exchanger water chemistry analyses are being performed to check for resin decomposition.

Which one of the following water chemistry test results does not indicate that significant resin decomposition has occurred?

A. A significant decrease in the ion exchanger's decontaminator factor.

B. A significant increase in the ion exchanger's effluent conductivity.

C. A significant increase in the ion exchanger's effluent radioactivity.

D. A significant increase in the ion exchanger's effluent dissolved gases.

ANSWER: D.

TOPIC: 191007
KNOWLEDGE: K1.09 [2.5/2.7]
QID: P7606 (B7606)

A mixed-bed ion exchanger is being used to process reactor coolant. The ion exchanger has been in service for 6 months at 100 percent power. A temperature controller malfunction causes the ion exchanger influent temperature to exceed the resin's maximum temperature limit before being manually restored to normal. Ion exchanger water chemistry analyses are being performed to check for resin decomposition.

Which one of the following water chemistry test results does not indicate that significant resin decomposition has occurred?

A. A significant decrease in the ion exchanger's decontaminator factor.

B. A significant increase in the ion exchanger's effluent conductivity.

C. A significant increase in the ion exchanger's effluent radioactivity.

D. A significant increase in the ion exchanger's effluent dissolved gases.

ANSWER: D.

TOPIC: 191007
KNOWLEDGE: K1.09 [2.5/2.7]
QID: P7656 (B7656)

Demineralizer 1A was removed from service after it became saturated with chloride ions while processing condensate with 10 times the normal chloride concentration. Replacement demineralizer 1B has restored the condensate chloride concentration to normal. Demineralizer 1A has not been processed in any way since being removed from service.

If demineralizer 1A is returned to service to replace demineralizer 1B, the downstream condensate system chloride concentration will...

A. remain the same, because demineralizer 1A resin has already been conditioned by previous operation.

B. remain the same, because demineralizer 1A resin can no longer remove chloride ions from the condensate.

C. increase, only due to the volume of water contained in demineralizer 1A mixing with the incoming condensate.

D. increase, due to both the volume of water contained in demineralizer 1A mixing with the incoming condensate and the release of chloride ions from the resin.

ANSWER: D.

TOPIC: 191007
KNOWLEDGE: K1.09 [2.5/2.7]
QID: P7685 (B7685)

A mixed-bed ion exchanger is being used to process reactor coolant. The ion exchanger has been in service for 6 months at 100 percent power. A temperature controller malfunction causes the ion exchanger influent temperature to exceed the resin's maximum temperature limit before being manually restored to normal. Ion exchanger water chemistry analyses are being performed to check for resin decomposition.

Which one of the following water chemistry test results would indicate that significant resin decomposition has occurred?

A. A significant decrease in the ion exchanger's effluent conductivity.

B. A significant increase in the ion exchanger's effluent radioactivity.

C. A significant increase in the ion exchanger's decontamination factor.

D. A significant increase in the ion exchanger's effluent dissolved gases.

ANSWER: B.

TOPIC: 191007
KNOWLEDGE: K1.11 [2.5/2.8]
QID: P336

Prior to a scheduled nuclear power plant shutdown, the reactor coolant system was chemically shocked to induce a crud burst. What effect will the crud burst have on the letdown purification ion exchangers?

A. Decreased radiation levels around the ion exchangers.

B. Increased flow rate through the ion exchangers.

C. Decreased ion exchanger outlet conductivity.

D. Increased pressure drop across the ion exchangers.

ANSWER: D.

TOPIC: 191007
KNOWLEDGE: K1.11 [2.5/2.8]
QID: P1436

Prior to a scheduled nuclear power plant shutdown, the reactor coolant system was chemically shocked to induce a crud burst. What effect will the crud burst have on the in-service reactor coolant letdown ion exchangers?

A. Decreased ion exchanger outlet conductivity.

B. Decreased pressure drop across the ion exchangers.

C. Increased flow rate through the ion exchangers.

D. Increased radiation levels around the ion exchangers.

ANSWER: D.

TOPIC: 191007
KNOWLEDGE: K1.11 [2.5/2.8]
QID: P2736

A nuclear power plant was operating at steady-state 100 percent power when the reactor coolant system experienced a large crud burst. After 20 minutes, the operators began to record parameters for the in-service reactor coolant purification ion exchanger.

Assuming no additional operator actions, what trend will the recorded parameters show during the next few hours?

A. Increasing flow rate through the ion exchanger.

B. Increasing pressure drop across the ion exchanger.

C. Increasing ion exchanger inlet water conductivity.

D. Increasing ion exchanger outlet water conductivity.

ANSWER: B.

TOPIC: 191007
KNOWLEDGE: K1.11 [2.5/2.8]
QID: P3537 (B6320)

After 12 months of operation at 100 percent power, a reactor was shut down and a plant cooldown is in progress. An operator reports that the general area radiation level near the in-service reactor coolant ion exchanger has increased significantly since the cooldown began several hours ago.

Which one of the following is a typical cause of these indications, resulting from the cooldown?

A. Increased radioactive tritium in the reactor coolant.

B. Increased radioactive oxygen-16 dissolved in the reactor coolant.

C. Increased radioactive nitrogen-16 dissolved in the reactor coolant.

D. Increased radioactive corrosion products suspended in the reactor coolant.

ANSWER: D.

TOPIC: 191007
KNOWLEDGE: K1.11 [2.5/2.8]
QID: P5819 (B5820)

During a nuclear power plant cooldown, the reactor experiences a large crud burst. After 10 minutes, with stable reactor coolant chemistry parameters, the operators begin to record parameters for the in-service reactor coolant purification ion exchanger. The ion exchanger was recently filled with fresh resin.

Assuming no additional operator actions, what trend will the recorded parameters show during the next few hours?

A. Increasing ion exchanger inlet water conductivity.

B. Increasing ion exchanger outlet water conductivity.

C. Increasing flow rate through the ion exchanger.

D. Increasing radiation levels around the ion exchanger.

ANSWER: D.

TOPIC: 191007
KNOWLEDGE: K1.14 [2.4/2.6]
QID: P337

A nuclear power plant is operating at 70 percent steady-state power level when the temperature of the reactor coolant letdown passing through a boron-saturated mixed-bed ion exchanger is decreased by 20°F.

As a result, the boron concentration in the effluent of the ion exchanger will _____ because the ability of the ion exchanger to remove boron atoms has _____.

A. decrease; increased

B. decrease; decreased

C. increase; increased

D. increase; decreased

ANSWER: A.

TOPIC: 191007
KNOWLEDGE: K1.14 [2.4/2.6]
QID: P1335

A nuclear power plant is operating at steady-state 70 percent power when the temperature of the reactor coolant letdown passing through a boron-saturated mixed-bed ion exchanger increases by 20°F.

As a result, the boron concentration in the effluent of the ion exchanger will _____ because the ability of the ion exchanger to remove boron atoms has _____.

A. decrease; decreased

B. decrease; increased

C. increase; decreased

D. increase; increased

ANSWER: C.

TOPIC: 191007
KNOWLEDGE: K1.14 [2.4/2.6]
QID: P3337

Which one of the following indicates that a demineralizer receiving 75 gpm of reactor coolant is boron-saturated?

A. The decontamination factor of the demineralizer is less than 1.0.

B. The decontamination factor of the demineralizer is greater than 1.0.

C. After a demineralizer inlet temperature increase, demineralizer effluent boron concentration exceeds influent boron concentration.

D. After a demineralizer inlet temperature increase, demineralizer influent boron concentration exceeds effluent boron concentration.

ANSWER: C.

TOPIC: 191008
KNOWLEDGE: K1.01 [2.6/2.8]
QID: P37

To completely deenergize an electrical component and its associated control and indication circuits, the component breaker should be...

A. open with the control switch in Pull-To-Lock.

B. open with the control switch tagged in the open position.

C. racked out and tagged in the racked-out position.

D. racked out with control power fuses removed.

ANSWER: D.

TOPIC: 191008
KNOWLEDGE: K1.02 [2.8/2.9]
QID: P838 (B1841)

Which one of the following describes the normal operation of a local breaker overcurrent trip flag indicator?

A. Actuates when no lockout is present; satisfies an electrical interlock to remotely close a breaker.

B. Actuates when a breaker overcurrent trip has occurred; can be manually reset when the overcurrent condition clears.

C. Actuates when a breaker has failed to trip on an overcurrent condition; can be manually reset when the overcurrent condition clears.

D. Actuates to cause a breaker trip when the overcurrent trip setpoint is reached; can be remotely reset when the overcurrent condition clears.

ANSWER: B.

TOPIC: 191008
KNOWLEDGE: K1.02 [2.8/2.9]
QID: P5020 (B1141)

Which one of the following describes the local overcurrent trip flag indicators for a breaker?

A. They actuate prior to breaker tripping to warn of imminent protective action.

B. They indicate breaker overcurrent trip actuation during and after breaker trip actuation.

C. When actuated, they indicate that the associated breaker has failed to trip open.

D. When actuated, they indicate that the breaker overcurrent trip relay has been reset.

ANSWER: B.

TOPIC: 191008
KNOWLEDGE: K1.03 [2.9/3.1]
QID: P40 (B1943)

Loss of breaker control power will cause...

A. breaker line voltage to indicate zero regardless of actual breaker position.

B. the remote breaker position to indicate open regardless of actual breaker position.

C. inability to operate the breaker locally and remotely.

D. failure of the closing spring to charge following local closing of the breaker.

ANSWER: D.

TOPIC: 191008
KNOWLEDGE: K1.03 [2.9/3.1]
QID: P118

Which one of the following results from a loss of control power to a breaker supplying a large motor?

A. The motor ammeter indication will be zero regardless of actual breaker position.

B. The breaker will trip open due to the actuation of its protective trip device.

C. The breaker position will remotely indicate closed regardless of actual position.

D. The breaker charging motor will not recharge the closing spring after the breaker closes.

ANSWER: D.

TOPIC: 191008
KNOWLEDGE: K1.03 [2.9/3.1]
QID: P240

Which one of the following will cause a loss of ability to remotely trip a breaker and a loss of remote breaker position indication?

A. Failure of the breaker control switch.

B. Racking the breaker to the TEST position.

C. Mechanical binding of the breaker tripping bar.

D. Loss of control power for the breaker.

ANSWER: D.

TOPIC: 191008
KNOWLEDGE: K1.03 [2.9/3.1]
QID: P338 (B40)

Which one of the following will cause a loss of indication from the remote breaker position indicating lights associated with a typical 480 VAC load supply breaker?

A. Locally opening the breaker.

B. Loss of breaker line voltage.

C. Removing the breaker control power fuses.

D. Burnout of the local breaker position indicating lights.

ANSWER: C.

TOPIC: 191008
KNOWLEDGE: K1.04 [2.9/3.0]
QID: P639

How is typical breaker operation affected when the associated breaker control power transfer switch is placed in the LOCAL position?

A. Control power will be available to provide protective trips, and the breaker can be electrically operated only from the control room.

B. Control power will be removed from both the open and close circuits, and the breaker can be electrically operated only from the control room.

C. Control power will be available to provide protective trips, and the breaker can be electrically operated only from the breaker cabinet.

D. Control power will be removed from both the open and close circuits, and the breaker can be electrically operated only from the breaker cabinet.

ANSWER: C.

TOPIC: 191008
KNOWLEDGE: K1.04 [2.9/3.0]
QID: P840 (B840)

A typical 120 VAC manual circuit breaker tripped due to overload. To close this circuit breaker, the handle must be moved from the...

A. OFF position directly to the ON position; trip latch reset is not required.

B. midposition directly to the ON position; trip latch reset is not required.

C. OFF position to the midposition to reset the trip latch, and then to the ON position.

D. midposition to the OFF position to reset the trip latch, and then to the ON position.

ANSWER: D.

TOPIC: 191008
KNOWLEDGE: K1.04 [2.9/3.0]
QID: P2041 (B3344)

Two identical 1,000 MW generators are operating in parallel, supplying the same isolated electrical bus. The generator output breakers provide identical protection for the generators. Generator A and B output indications are as follows:

Generator A	Generator B
22.5 KV	22.5 KV
60.2 Hertz	60.2 Hertz
750 MW	750 MW
25 MVAR (out)	50 MVAR (out)

A malfunction causes the voltage regulator setpoint for generator B to slowly and continuously increase. If no operator action is taken, which one of the following describes the electrical current indications for generator A?

A. Current will decrease continuously until the output breaker for generator A trips on reverse power.

B. Current will decrease continuously until the output breaker for generator B trips on reverse power.

C. Current will initially decrease, and then increase until the output breaker for generator A trips on overcurrent.

D. Current will initially decrease, and then increase until the output breaker for generator B trips on overcurrent.

ANSWER: D.

TOPIC: 191008
KNOWLEDGE: K1.04 [2.9/3.0]
QID: P2439 (B2444)

Two identical 1,000 MW generators are operating in parallel, supplying all the loads on an isolated electrical bus. The generator output breakers provide identical protection for the generators. Generator A and B output indications are as follows:

Generator A	Generator B
28 KV	28 KV
60 Hertz	60 Hertz
150 MW	100 MW
25 MVAR (out)	50 MVAR (out)

A malfunction causes the voltage regulator setpoint for generator B to slowly and continuously decrease. If no operator action is taken, the electrical current indication for generator B will...

A. initially decrease, and then increase until the output breaker for generator A trips on overcurrent.

B. initially decrease, and then increase until the output breaker for generator B trips on overcurrent.

C. decrease continuously until the output breaker for generator A trips on overcurrent.

D. decrease continuously until the output breaker for generator B trips on reverse power.

ANSWER: A.

TOPIC: 191008
KNOWLEDGE: K1.04 [2.9/3.0]
QID: P2540 (B2543)

Two identical 1,000 MW generators are operating in parallel supplying the same isolated electrical bus. The generator output breakers also provide identical protection for the generators. Generator A and B output indications are as follows:

Generator A	Generator B
22 KV	22 KV
60.2 Hertz	60.2 Hertz
200 MW	200 MW
25 MVAR (out)	50 MVAR (out)

A malfunction causes the voltage regulator setpoint for generator A to slowly and continuously increase. If no operator action is taken, generator B output current will...

A. initially decrease, and then increase until the output breaker for generator A trips on overcurrent.

B. initially decrease, and then increase until the output breaker for generator B trips on overcurrent.

C. increase continuously until the output breaker for generator A trips on overcurrent.

D. increase continuously until the output breaker for generator B trips on overcurrent.

ANSWER: A.

TOPIC: 191008
KNOWLEDGE: K1.04 [2.9/3.0]
QID: P2639

Two identical 1,000 MW electrical generators are operating in parallel supplying the same isolated electrical bus. The generator output breakers provide identical protection for the generators. Generator A and B output indications are as follows:

Generator A	Generator B
22 KV	22 KV
60.2 Hertz	60.2 Hertz
200 MW	200 MW
25 MVAR (out)	50 MVAR (out)

A malfunction causes the voltage regulator setpoint for generator A to slowly and continuously decrease. If no operator action is taken, generator B output current will increase until...

A. the output breaker for generator A trips on overcurrent.

B. the output breaker for generator B trips on overcurrent.

C. the output breaker for generator A trips on reverse power.

D. the output breaker for generator B trips on reverse power.

ANSWER: B.

TOPIC: 191008
KNOWLEDGE: K1.04 [2.9/3.0]
QID: P4620 (B4615)

Two identical 1,000 MW generators are operating in parallel supplying the same isolated electrical bus. The generator output breakers provide identical protection for the generators. Generator A and B output indications are as follows:

Generator A	Generator B
22 KV	22 KV
60.2 Hertz	60.2 Hertz
200 MW	200 MW
25 MVAR (out)	50 MVAR (out)

A malfunction causes the voltage regulator setpoint for generator B to slowly and continuously increase. If no operator action is taken, generator A output current will...

A. increase continuously until the output breaker for generator A trips on overcurrent.

B. decrease continuously until the output breaker for generator B trips on overcurrent.

C. initially decrease, and then increase until the output breaker for generator A trips on overcurrent.

D. initially decrease, and then increase until the output breaker for generator B trips on overcurrent.

ANSWER: D.

TOPIC: 191008
KNOWLEDGE: K1.06 [2.3/2.6]
QID: P540 (B541)

Refer to the drawing of a valve motor control circuit (see figure below).

What is the purpose of depressing the S1 pushbutton?

A. To deenergize the K3 relay after the initiating condition has cleared.

B. To prevent energizing the K3 relay when the initiating condition occurs.

C. To manually energize the K3 relay in the absence of the initiating condition.

D. To maintain the K3 relay energized after the initiating condition has cleared.

ANSWER: A.

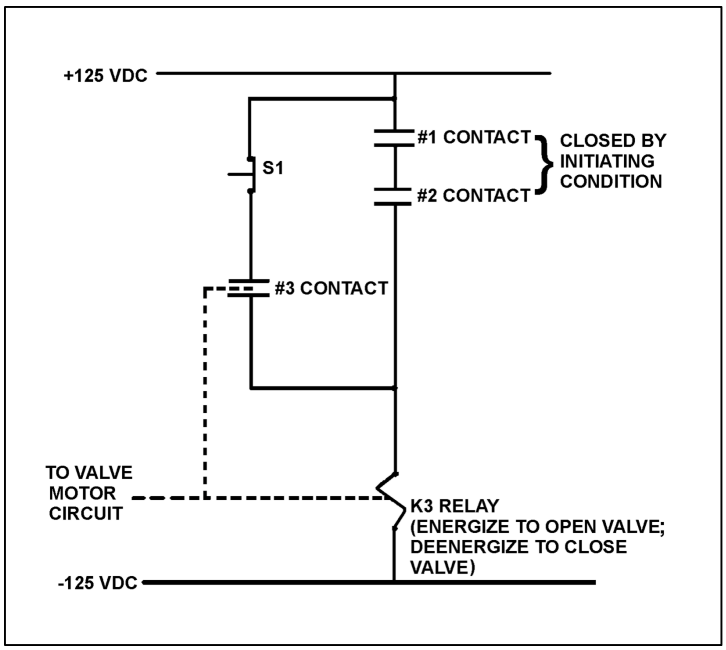

TOPIC: 191008
KNOWLEDGE: K1.06 [2.3/2.6]
QID: P640 (B116)

Refer to the drawing of a valve motor control circuit (see figure below).

One purpose of the K3 relay is to...

A. hold the valve open after one or both initiating conditions have cleared, even if the reset pushbutton (S1) is depressed.

B. hold the valve open even if one or both initiating conditions have cleared.

C. close the valve as soon as either initiating condition has cleared.

D. close the valve as soon as both initiating conditions have cleared.

ANSWER: B.

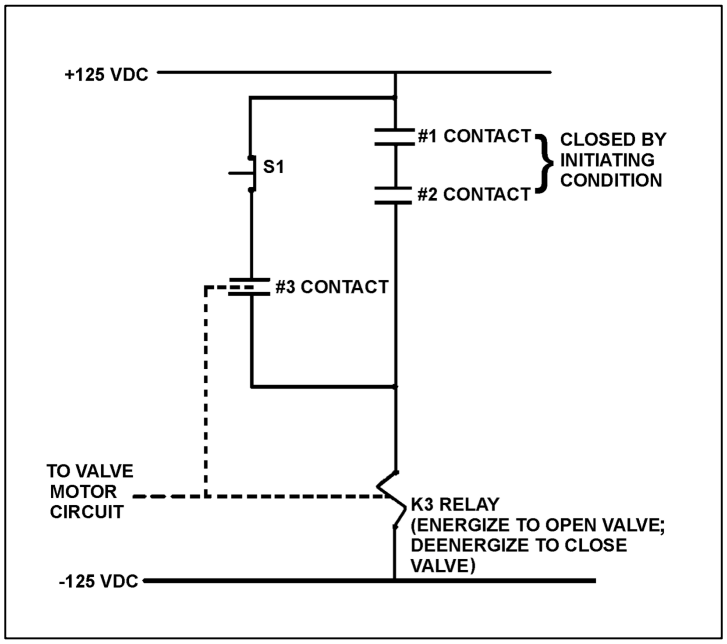

TOPIC: 191008
KNOWLEDGE: K1.06 [2.3/2.6]
QID: P742 (B742)

Refer to the drawing of a valve motor control circuit (see figure below).

The valve is currently open with the contact configuration as shown. If the S1 pushbutton is depressed, the valve will _____; and when the S1 pushbutton is subsequently released, the valve will _____.

A. remain open; remain open

B. close; remain closed

C. remain open; close

D. close; open

ANSWER: B.

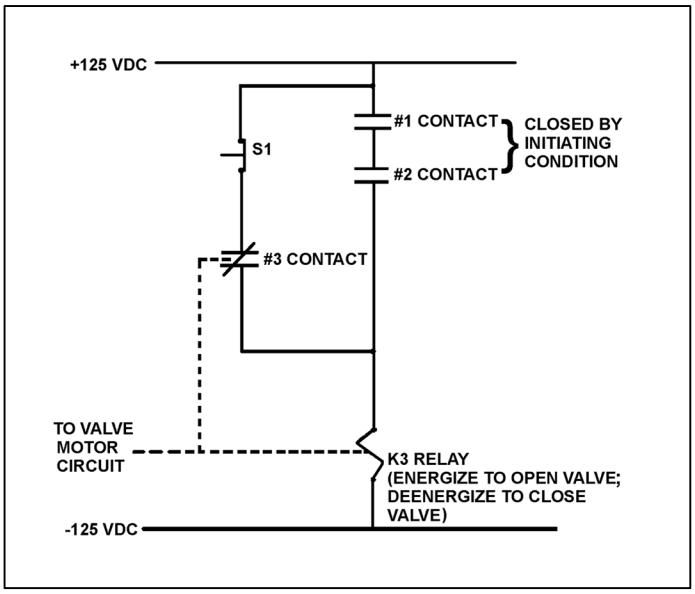

TOPIC: 191008
KNOWLEDGE: K1.06 [2.3/2.6]
QID: P941 (B942)

Refer to the drawing of a valve motor control circuit (see figure below).

Which one of the following describes the function of the #3 contact?

A. To keep the K3 relay energized after the initiating condition clears.

B. To provide a method for manually energizing the K3 relay.

C. To increase circuit reliability because any one of the three contacts can energize the K3 relay.

D. To ensure the K3 relay can always be deenergized even with the initiating condition present.

ANSWER: A.

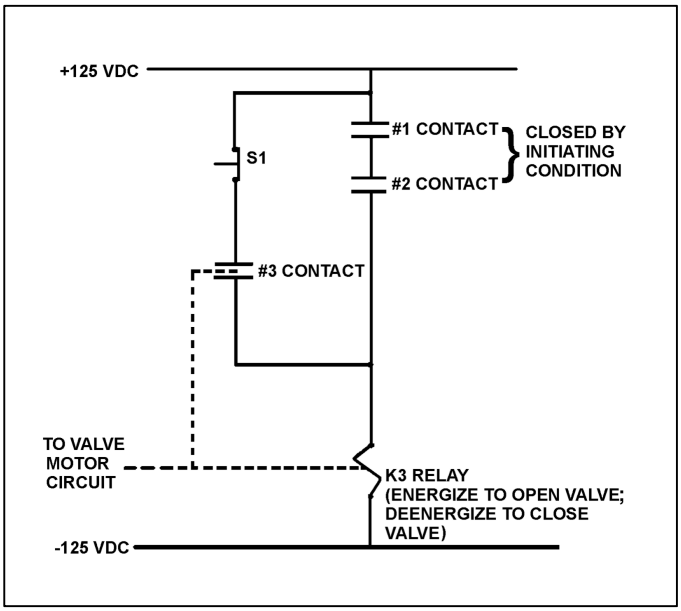

TOPIC: 191008
KNOWLEDGE: K1.06 [2.3/2.6]
QID: P1040 (B1042)

Refer to the drawing of a valve motor control circuit (see figure below).

The initiating condition occurs and closes the #1 and #2 contacts to energize the K3 relay and open the valve. Which one of the following will close the valve?

A. Loss of 125 VDC.

B. Both #1 and #2 contacts open.

C. Either #1 or #2 contact opens.

D. Depressing the S1 pushbutton with the initiating condition present.

ANSWER: A.

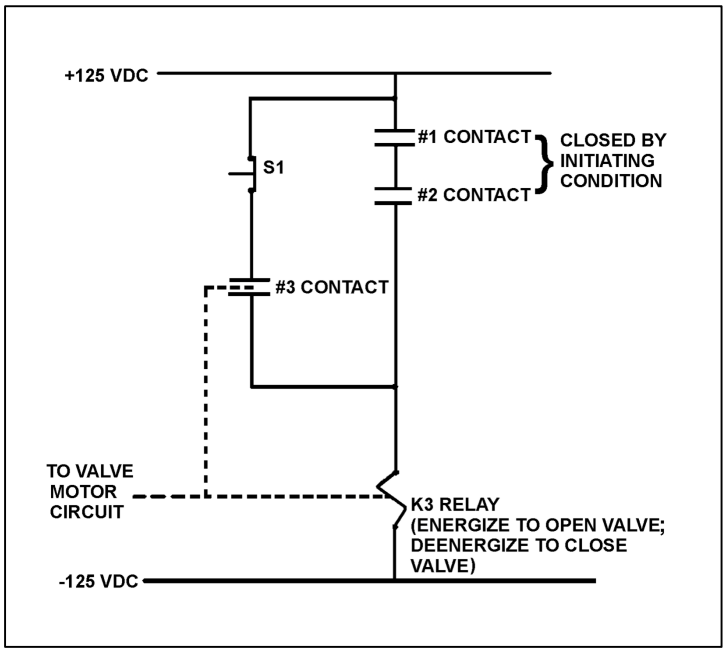

TOPIC: 191008
KNOWLEDGE: K1.06 [2.3/2.6]
QID: P1239 (B5022)

Refer to the drawing of a valve motor control circuit (see figure below).

Note: Limit switch (LS) contacts are shown open regardless of valve position, but relay contacts are shown open/closed according to the standard convention for control circuit drawings.

If the valve is currently closed, when will the alarm actuate?

A. As soon as PB2 is pushed.

B. Ten seconds after PB2 is pushed if the valve is still closed.

C. Immediately upon pushing PB2 and for the next 10 seconds if the valve remains closed.

D. Ten seconds after PB2 is pushed if the valve is still stroking open.

ANSWER: B.

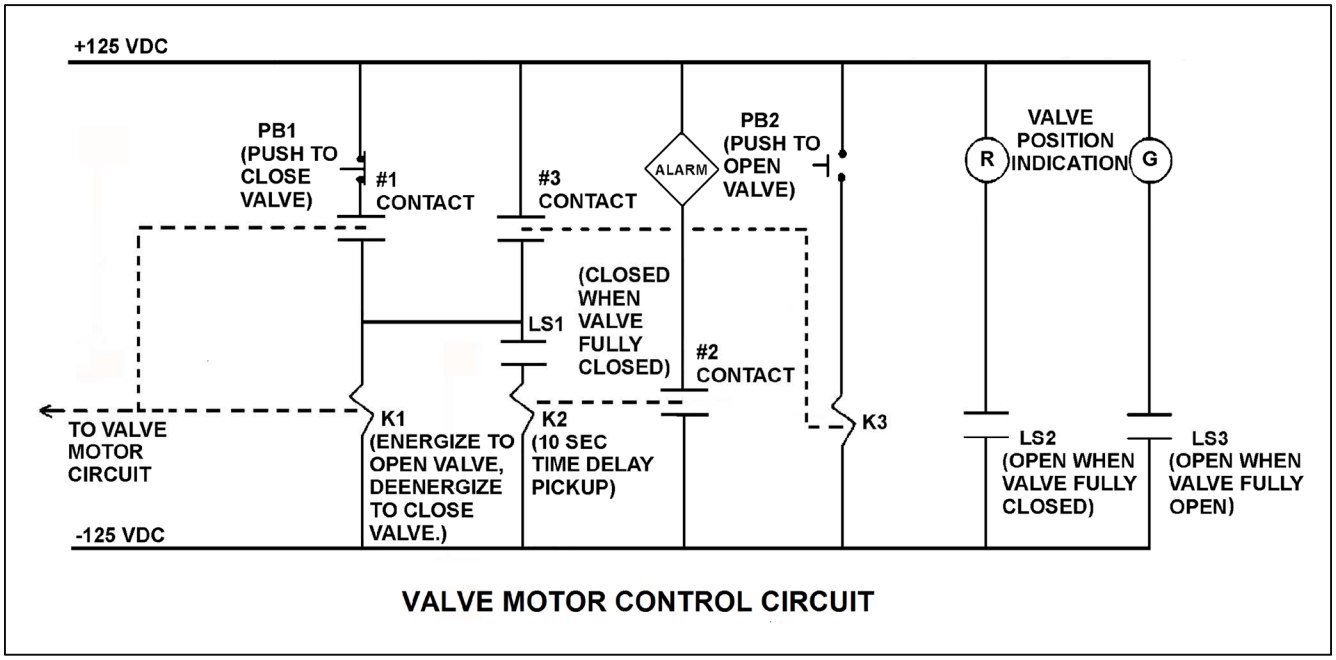

VALVE MOTOR CONTROL CIRCUIT

TOPIC: 191008
KNOWLEDGE: K1.06 [2.3/2.6]
QID: P1340 (B1341)

Refer to the drawing of a valve motor control circuit for a valve that is currently fully closed (see figure below).

Note: Limit switch (LS) contacts are shown open regardless of valve position, but relay contacts are shown open/closed according to the standard convention for control circuit drawings.

Which one of the following describes when the motor-operated valve will begin to stroke open?

A. At the same time the alarm actuates.

B. 10 seconds after PB2 is depressed.

C. Immediately after PB2 is depressed.

D. Immediately after PB1 is depressed if contact #1 is closed.

ANSWER: C.

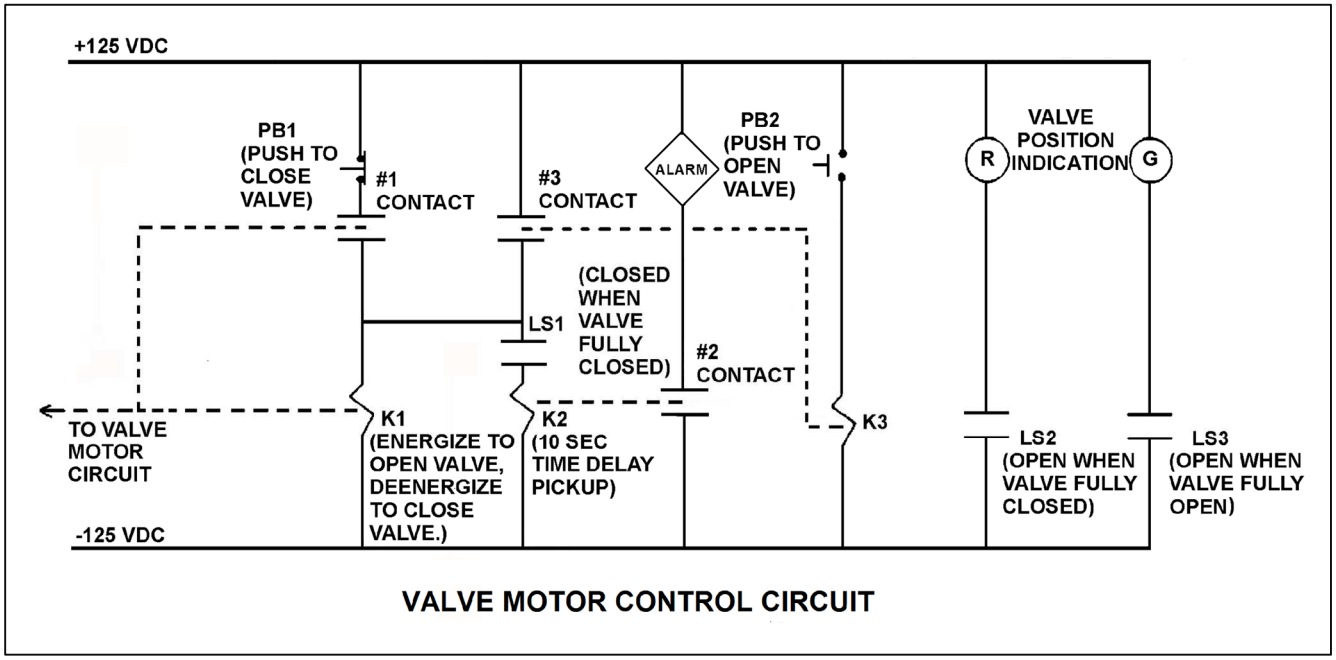

VALVE MOTOR CONTROL CIRCUIT

TOPIC: 191008
KNOWLEDGE: K1.06 [2.3/2.6]
QID: P1440 (B1441)

Refer to the drawing of a valve motor control circuit (see figure below).

Pushbutton PB2 was depressed to open the valve, and the current contact and pushbutton status is as shown with the following exceptions:

LS1 is closed.
LS3 is closed.
#1 contact is closed.
#2 contact is closed.

Which one of the following describes the condition of the valve and its control circuit?

A. The valve is closed and the valve motor circuit has just been energized to open the valve.

B. The valve is closed and an open demand signal has existed for at least 10 seconds.

C. The valve is partially open and the valve motor circuit is deenergized because PB2 was prematurely released.

D. The valve is partially open and an open demand signal has existed for at least 10 seconds.

ANSWER: B.

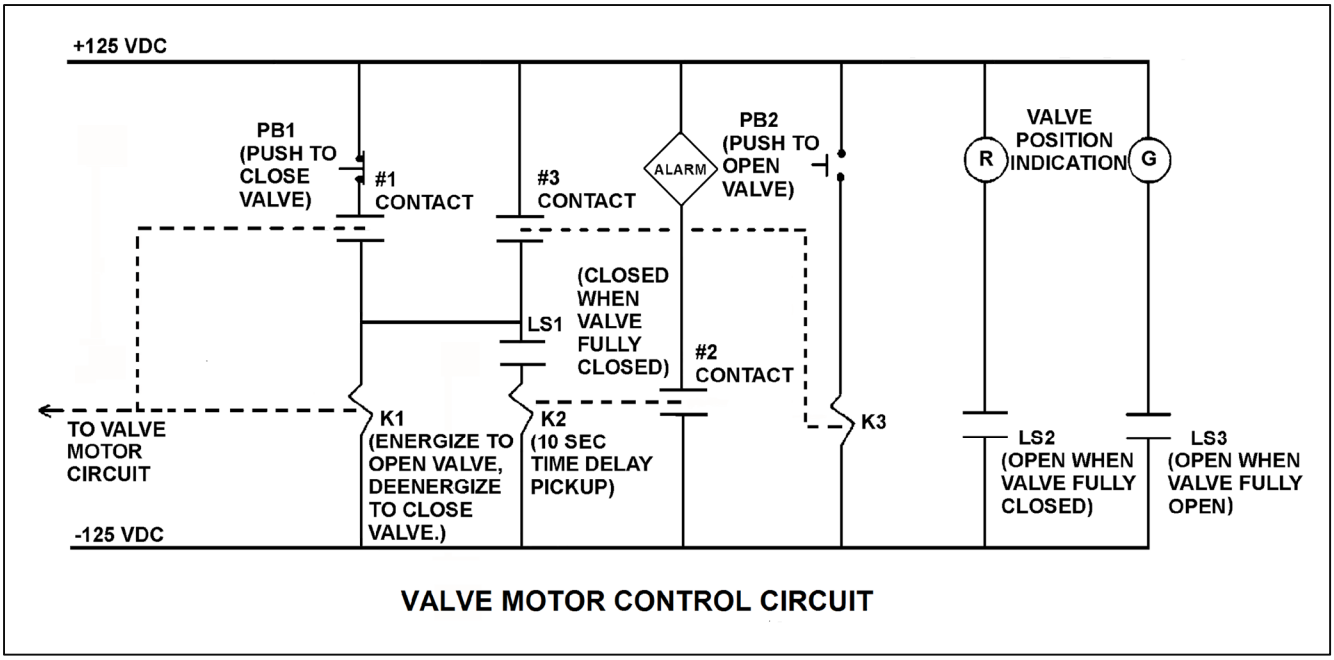

VALVE MOTOR CONTROL CIRCUIT

TOPIC: 191008
KNOWLEDGE: K1.06 [2.3/2.6]
QID: P1540 (B1542)

Refer to the drawing of a valve motor control circuit (see figure below).

Note: Limit switch (LS) contacts are shown open regardless of valve position, but relay contacts are shown open/closed according to the standard convention for control circuit drawings.

Which one of the following describes the purpose of the alarm?

A. Alert the operator when the valve motor circuit has been energized for 10 seconds after pushbutton PB2 is depressed.

B. Alert the operator when the valve has not moved off its closed seat within 10 seconds of depressing pushbutton PB2.

C. Alert the operator that the valve is opening by sounding the alarm for 10 seconds after PB2 is depressed.

D. Alert the operator if the valve has not reached full open within 10 seconds of depressing pushbutton PB2.

ANSWER: B.

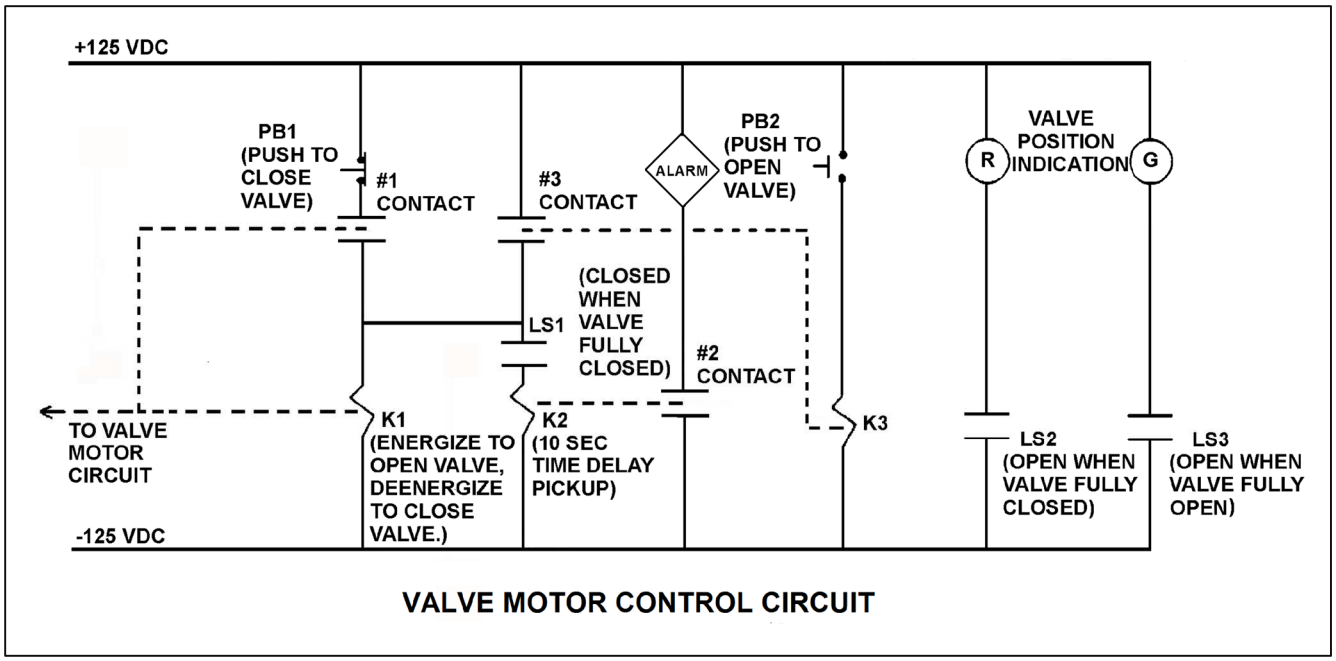

VALVE MOTOR CONTROL CIRCUIT

TOPIC: 191008
KNOWLEDGE: K1.06 [2.3/2.6]
QID: P1640 (B1644)

Refer to the drawing of a valve motor control circuit (see figure below).

Note: Limit switch (LS) contacts are shown open regardless of valve position, but relay contacts are shown open/closed according to the standard convention for control circuit drawings.

The valve is half open and moving to the open position. Which one of the following describes the current condition of the valve position indicating lights?

A. Red light on, green light on

B. Red light on, green light off

C. Red light off, green light on

D. Red light off, green light off

ANSWER: A.

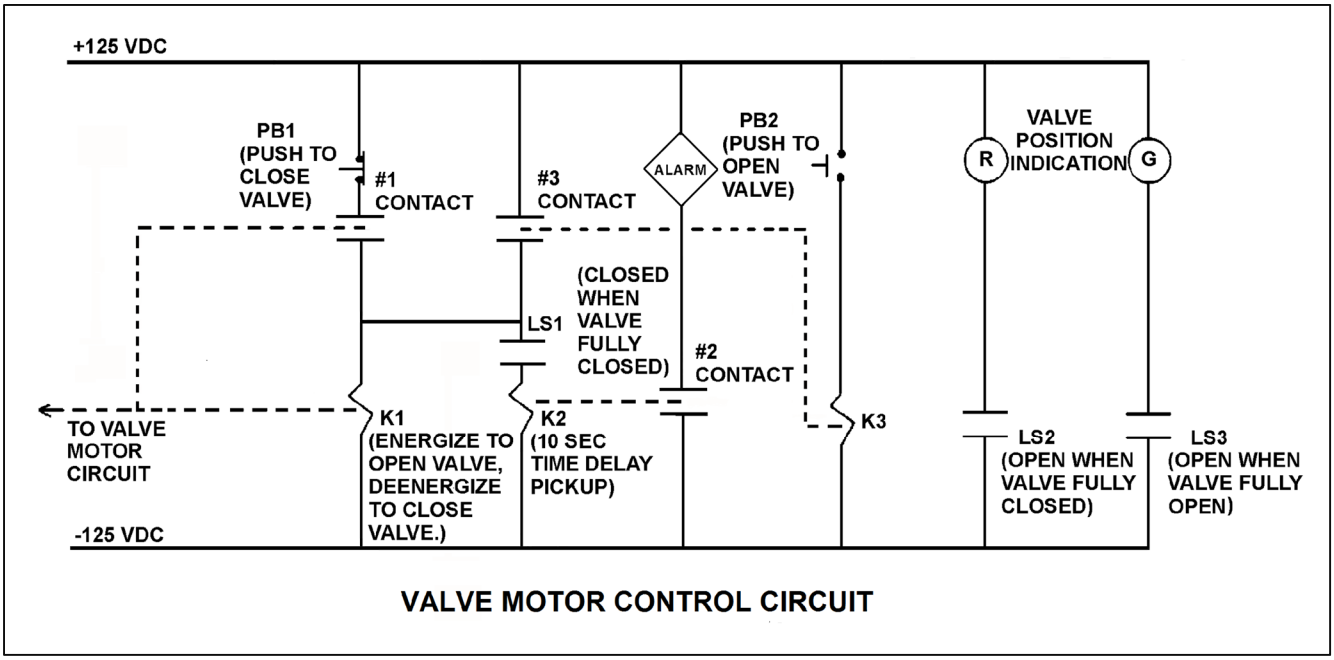

VALVE MOTOR CONTROL CIRCUIT

TOPIC: 191008
KNOWLEDGE: K1.06 [2.3/2.6]
QID: P1739 (B1742)

Refer to the drawing of a valve motor control circuit (see figure below).

Note: Limit switch (LS) contacts are shown open regardless of valve position, but relay contacts are shown open/closed according to the standard convention for control circuit drawings.

Pushbutton PB2 has been momentarily depressed and then released, and the valve is currently at mid-stroke and moving to the open position. Under these conditions, which one of the following describes the position of contacts #1, #2, and #3?

A. #1 closed; #2 open; #3 open

B. #1 open; #2 closed; #3 closed

C. #1 open; #2 closed; #3 open

D. #1 closed; #2 open; #3 closed

ANSWER: A.

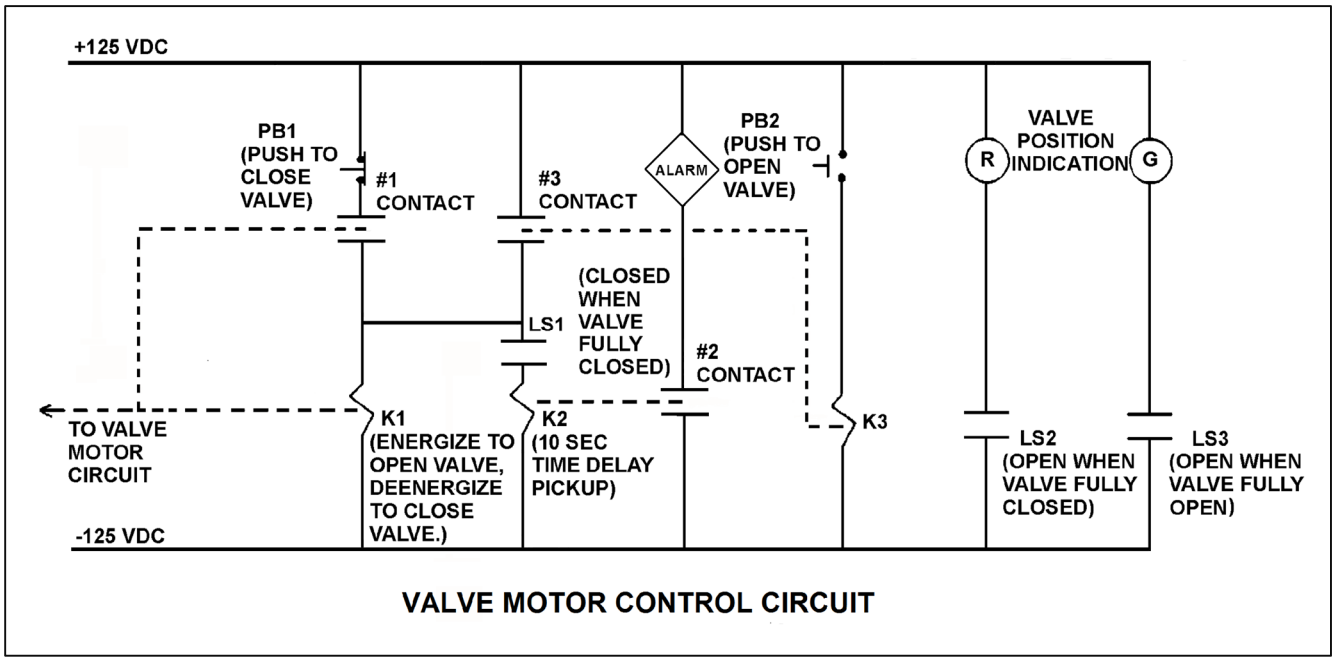

VALVE MOTOR CONTROL CIRCUIT

TOPIC: 191008
KNOWLEDGE: K1.06 [2.3/2.6]
QID: P2239 (B2341)

Refer to the drawing of a valve motor control circuit (see figure below) for a valve that is currently fully open and has a 10-second stroke time.

Note: Limit switch (LS) contacts are shown open regardless of valve position, but relay contacts are shown open/closed according to the standard convention for control circuit drawings.

Which one of the following describes the valve response if the control switch is taken to the CLOSE position for two seconds and then released?

A. The valve will not move.

B. The valve will close fully.

C. The valve will begin to close and then stop moving.

D. The valve will begin to close and then open fully.

ANSWER: C.

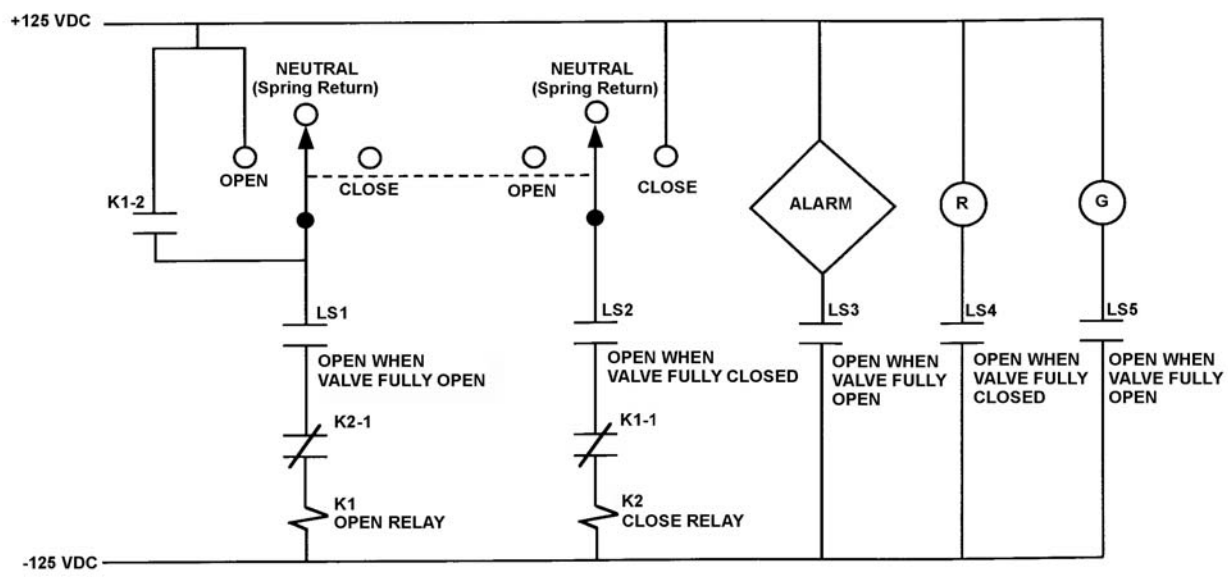

VALVE MOTOR CONTROL CIRCUIT

TOPIC: 191008
KNOWLEDGE: K1.06 [2.3/2.6]
QID: P2341 (B2442)

Refer to the drawing of a valve motor control circuit (see figure below) for a valve that is currently fully closed and has a 10-second stroke time.

Note: Limit switch (LS) contacts are shown open regardless of valve position, but relay contacts are shown open/closed according to the standard convention for control circuit drawings.

Which one of the following describes the valve response if the control switch is taken to the OPEN position for two seconds and then released?

A. The valve will not move.

B. The valve will open fully.

C. The valve will begin to open and then stop moving.

D. The valve will begin to open and then close fully.

ANSWER: B.

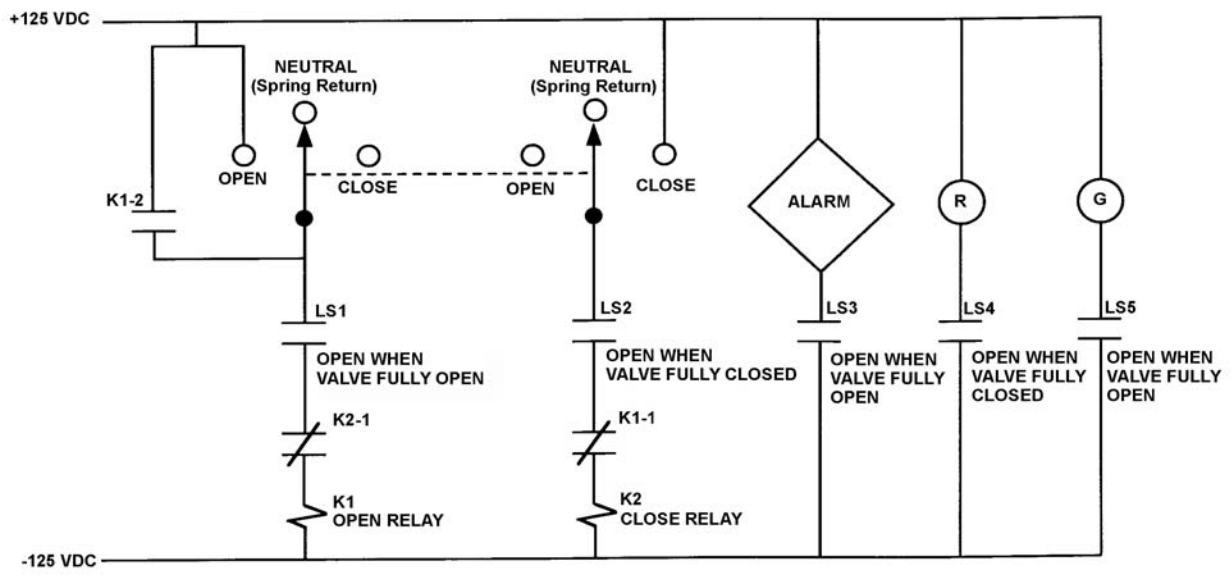

VALVE MOTOR CONTROL CIRCUIT

TOPIC: 191008
KNOWLEDGE: K1.06 [2.3/2.6]
QID: P2539 (B2542)

Refer to the drawing of a valve motor control circuit (see figure below) for a valve that is currently fully open and has a 10-second stroke time. Limit switch LS2 has failed open .

Note: Limit switch (LS) contacts are shown open regardless of valve position, but relay contacts are shown open/closed according to the standard convention for control circuit drawings.

Which one of the following describes the valve response if the control switch is taken to the CLOSE position for 2 seconds and then released?

A. The valve will <u>not</u> move.

B. The valve will close fully.

C. The valve will begin to close and then stop moving.

D. The valve will begin to close and then open fully.

ANSWER: A.

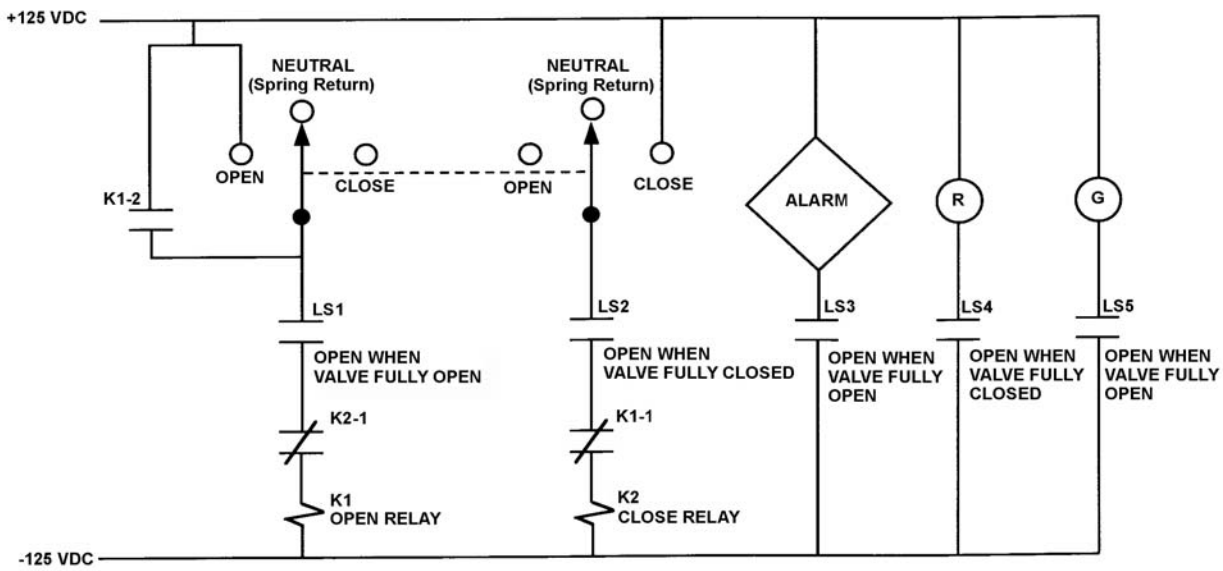

VALVE MOTOR CONTROL CIRCUIT

TOPIC: 191008
KNOWLEDGE: K1.06 [2.3/2.6]
QID: P2640 (B2841)

Refer to the drawing of a valve motor control circuit (see figure below) for a valve that is currently fully closed and has a 10-second stroke time.

Note: Limit switch (LS) contacts are shown open regardless of valve position, but relay contacts are shown open/closed according to the standard convention for control circuit drawings.

The operator takes the control switch to OPEN momentarily and the valve begins to open. Five seconds later, the operator takes the switch to CLOSE momentarily and then releases the switch. Which one of the following describes the valve response after the switch is released?

A. The valve will stop opening and remain partially open.

B. The valve will stop opening and then go fully closed.

C. The valve will open fully and remain fully open.

D. The valve will open fully and then go fully closed.

ANSWER: C.

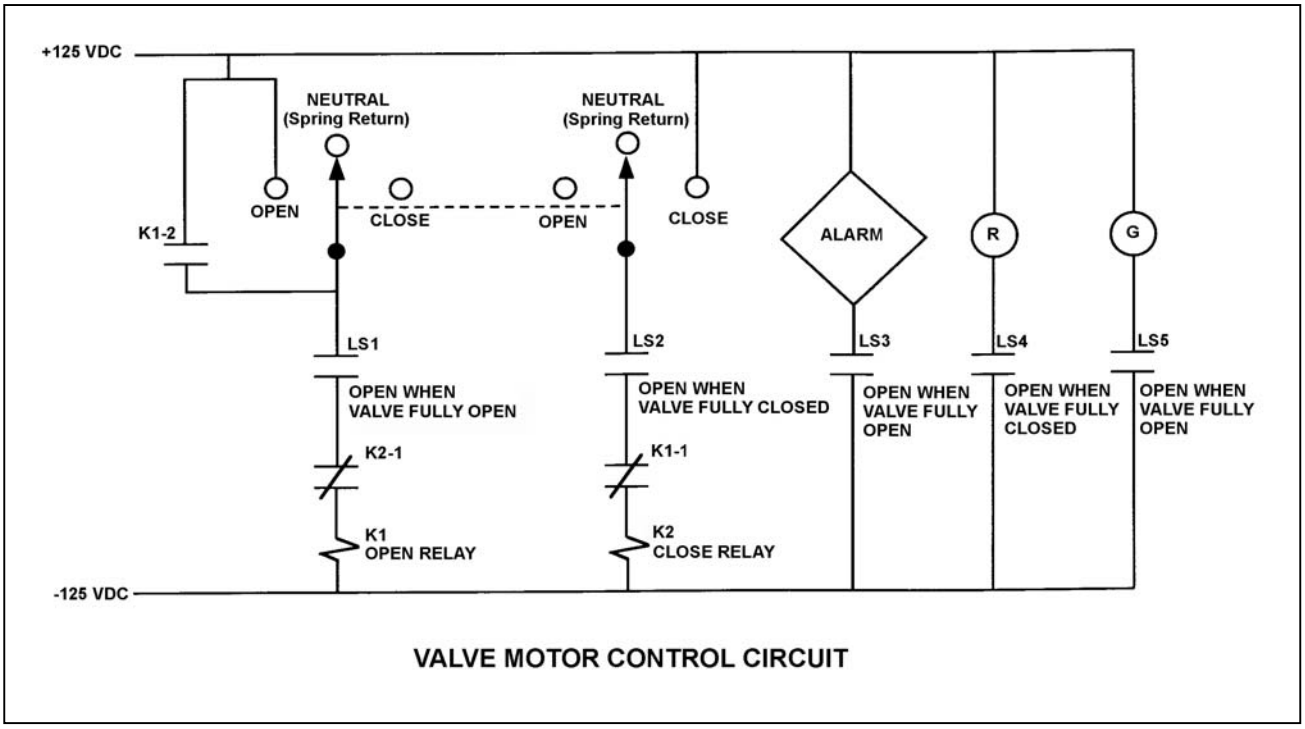

VALVE MOTOR CONTROL CIRCUIT

TOPIC: 191008
KNOWLEDGE: K1.06 [2.3/2.6]
QID: P2739 (B2741)

Refer to the drawing of a valve motor control circuit (see figure below) for a valve that is currently fully closed and has a 10-second stroke time.

Note: Limit switch (LS) contacts are shown open regardless of valve position, but relay contacts are shown open/closed according to the standard convention for control circuit drawings.

An operator takes the control switch to OPEN momentarily and the valve begins to open. Five seconds later, the operator places and holds the switch in the CLOSE position. Which one of the following describes the valve response with the switch held in the CLOSE position?

A. The valve will stop opening and remain partially open.

B. The valve will stop opening and then go fully closed.

C. The valve will open fully and remain fully open.

D. The valve will open fully and then go fully closed.

ANSWER: D.

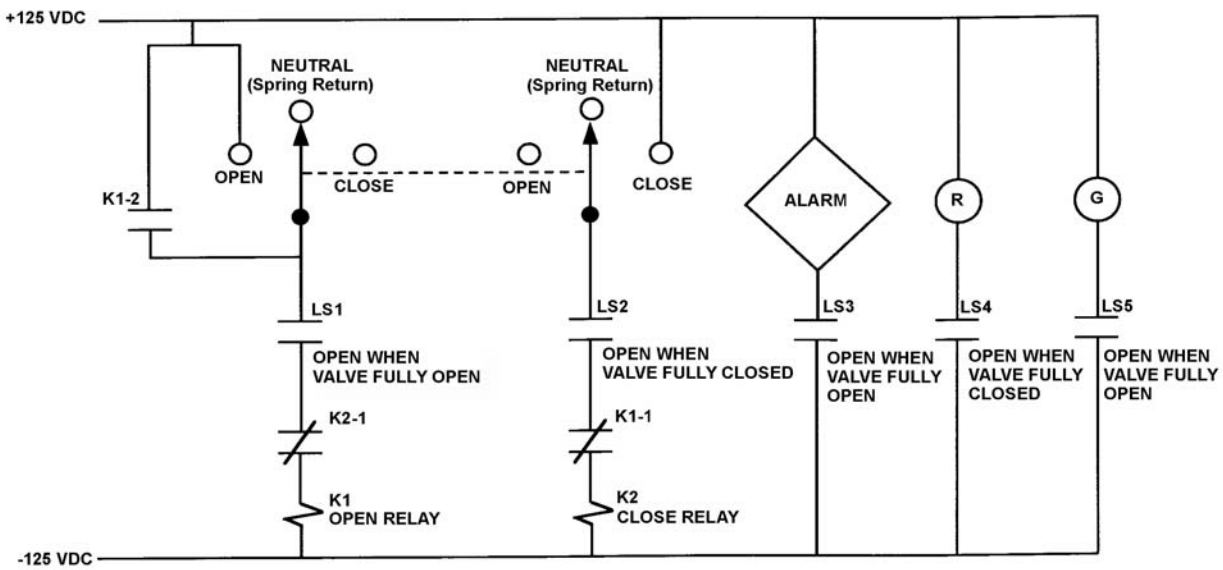

VALVE MOTOR CONTROL CIRCUIT

TOPIC: 191008
KNOWLEDGE: K1.06 [2.3/2.6]
QID: P2839

Refer to the drawing of a valve motor control circuit (see figure below) for a valve that is currently fully closed and has a 10-second stroke time.

Note: Limit switch (LS) contacts are shown open regardless of valve position, but relay contacts are shown open/closed according to the standard convention for control circuit drawings.

An operator takes the control switch to OPEN. Two seconds later, after verifying the valve is opening, the operator releases the control switch. Which one of the following describes the valve motor control circuit alarm response after the switch is released?

A. The alarm will continue to actuate for approximately 8 seconds.

B. The alarm will continue to actuate until additional operator action is taken.

C. The alarm will actuate after approximately 8 seconds.

D. The alarm will <u>not</u> actuate until additional operator action is taken.

ANSWER: A.

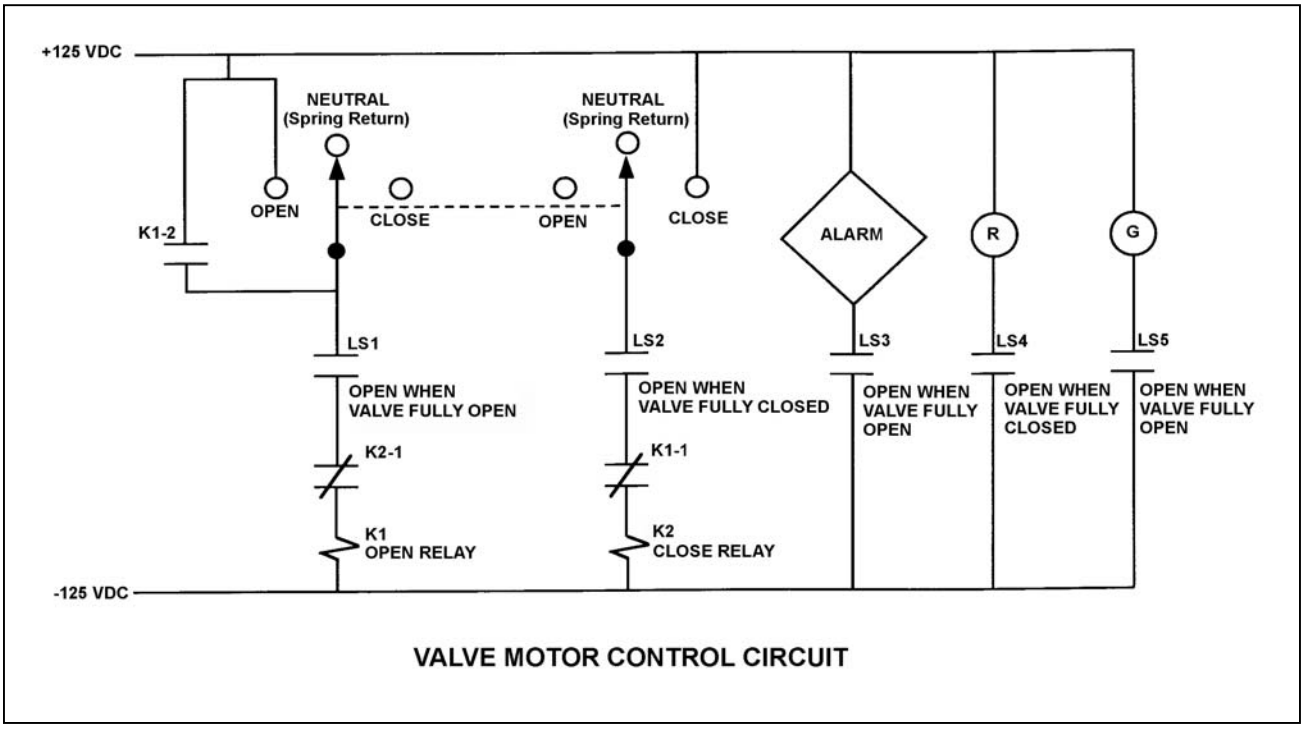

VALVE MOTOR CONTROL CIRCUIT

TOPIC: 191008
KNOWLEDGE: K1.06 [2.3/2.6]
QID: P2942 (B2940)

Refer to the drawing of a motor and its control circuit (see figure below).

Note: Relay contacts are shown open/closed according to the standard convention for control circuit drawings.

What is the purpose of the Time Delay Coil (TD) in the motor controller circuit?

A. Ensures the motor cannot be started until the overload relays are reset.

B. Ensures the motor cannot be started until the accelerating coil is energized.

C. Allows the motor to come up to speed before bypassing the starting resistors.

D. Allows the motor to come up to speed before placing the starting resistors in the circuit.

ANSWER: C.

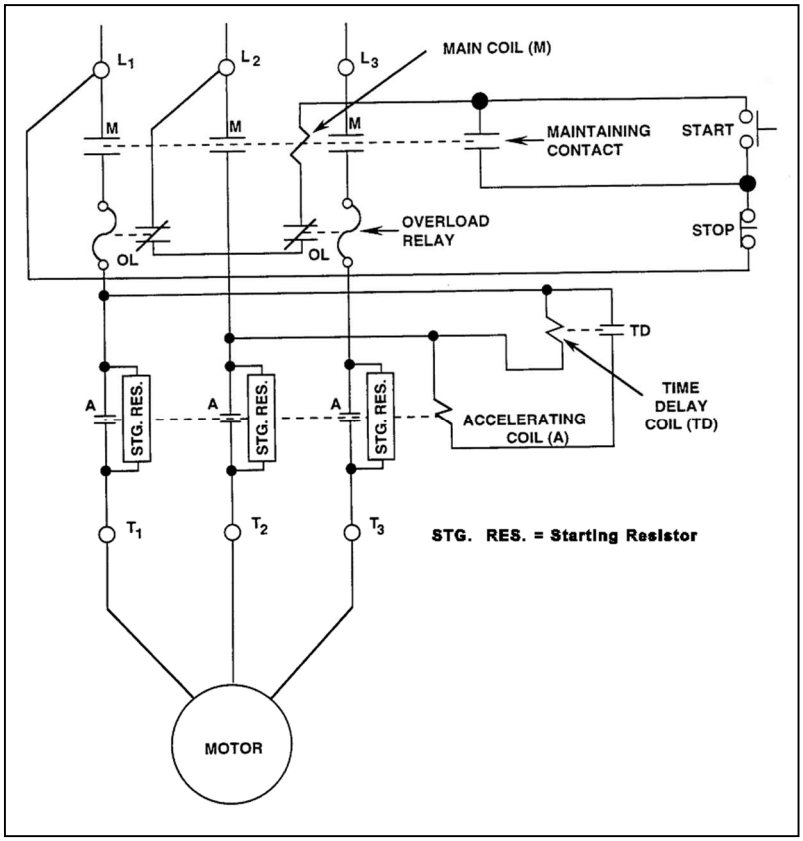

TOPIC: 191008
KNOWLEDGE: K1.06 [2.3/2.6]
QID: P3640 (B3641)

Refer to the drawing of a motor and its control circuit (see figure below).

Note: Relay contacts are shown open/closed according to the standard convention for control circuit drawings.

The motor receives overload protection from _____ overload relays; and _____ overload relay(s) must actuate to deenergize the motor.

A. two; one

B. two; two

C. three; one

D. three; two

ANSWER: A.

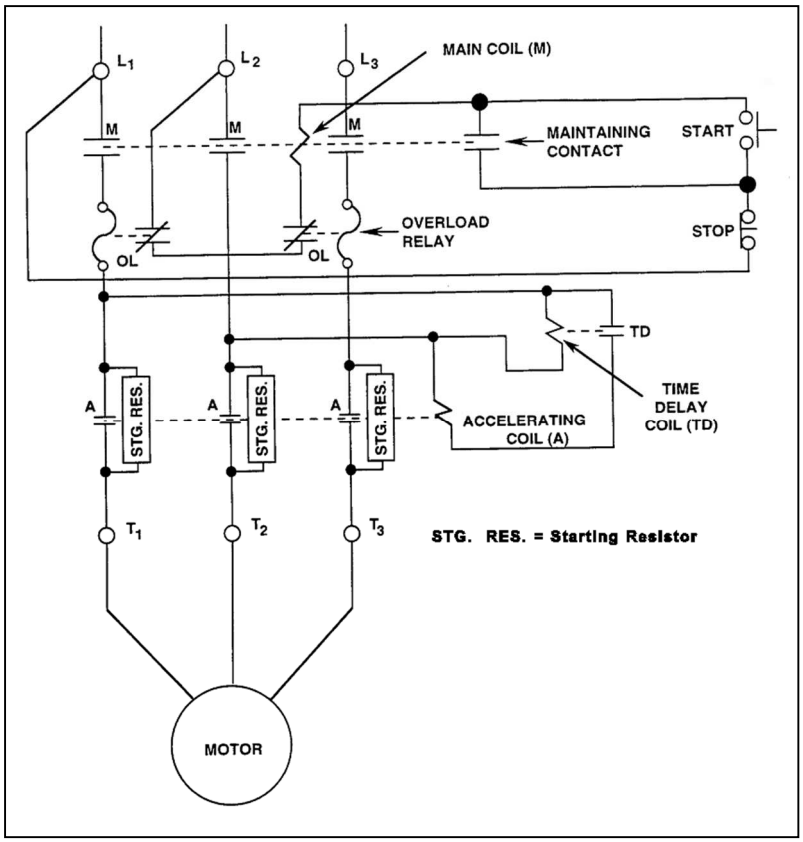

TOPIC: 191008
KNOWLEDGE: K1.06 [2.3/2.6]
QID: P3921 (B3921)

Refer to the drawing of a valve motor control circuit (see figure below) for a valve that is currently fully closed and has a 10-second stroke time.

Note: Limit switch (LS) contacts are shown open regardless of valve position, but relay contacts are shown open/closed according to the standard convention for control circuit drawings.

The operator takes the control switch to OPEN for 5 seconds and then releases the switch. After one minute, the operator takes the control switch to CLOSE for 5 seconds and then releases the switch. Which one of the following describes the valve position immediately after the control switch is released the second time?

A. Approximately fully open.

B. Approximately fully closed.

C. Approximately 50 percent open.

D. Cannot be determined without additional information.

ANSWER: B.

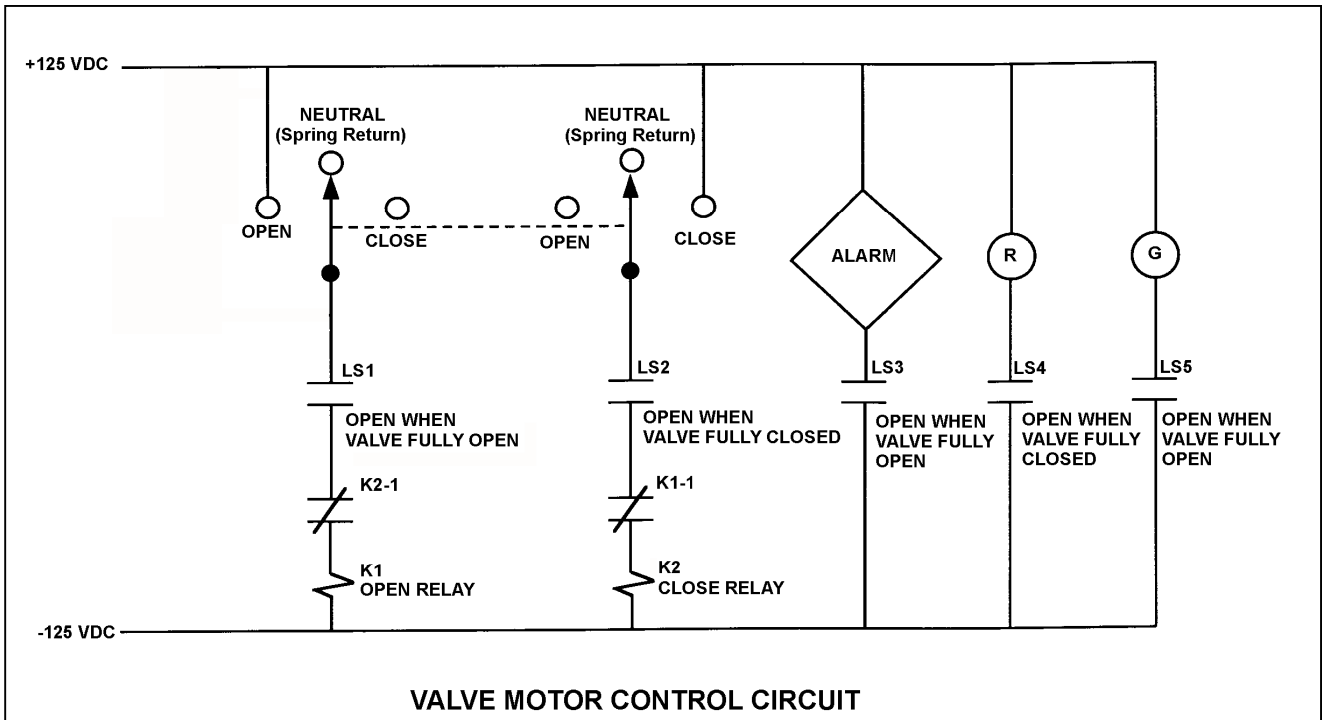

VALVE MOTOR CONTROL CIRCUIT

TOPIC: 191008
KNOWLEDGE: K1.06 [2.3/2.6]
QID: P4221 (B4221)

Refer to the drawing of a motor and its control circuit (see figure below).

Note: Relay contacts are shown open/closed according to the standard convention for control circuit drawings.

How are the starting resistors employed before and after the motor is energized?

A. Inserted before the motor is energized; simultaneously bypassed after the motor gains speed.

B. Inserted before the motor is energized; sequentially bypassed as the motor gains speed.

C. Bypassed before the motor is energized; simultaneously inserted after the motor gains speed.

D. Bypassed before the motor is energized; sequentially inserted as the motor gains speed.

ANSWER: A.

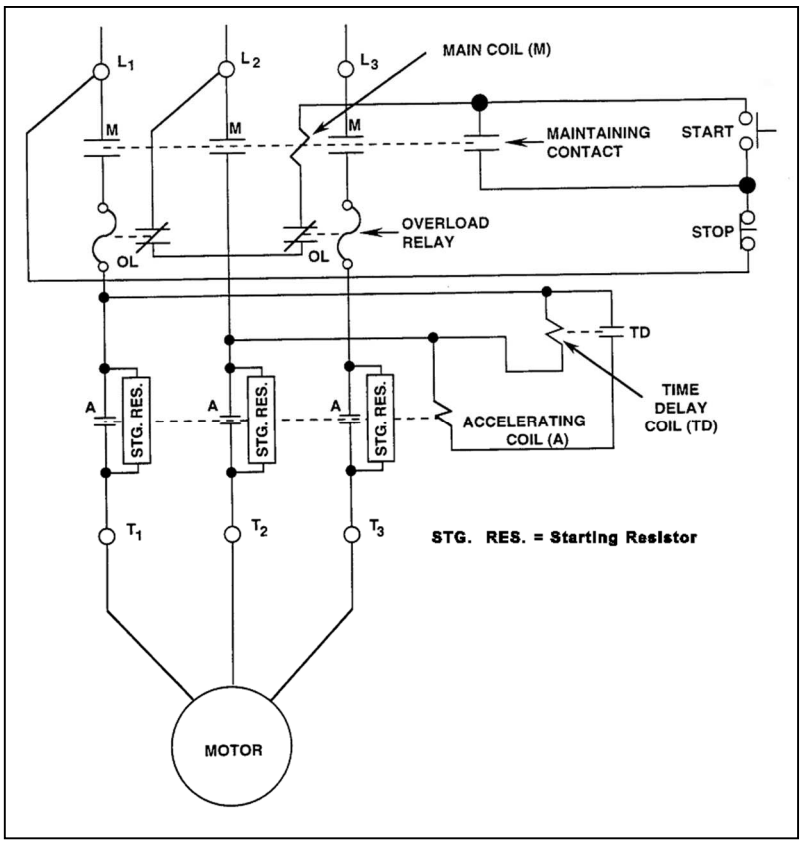

TOPIC: 191008
KNOWLEDGE: K1.06 [2.3/2.6]
QID: P4421 (B4421)

Refer to the drawing of a motor and its control circuit (see figure below).

Note: Relay contacts are shown open/closed according to the standard convention for control circuit drawings.

The motor has been operating for several hours when it is decided to stop the motor. What is the status of the starting resistors before and after the motor STOP pushbutton is depressed?

A. Initially inserted in the motor circuit; bypassed immediately after the STOP pushbutton is depressed.

B. Initially inserted in the motor circuit; bypassed following a preset time delay after the STOP pushbutton is depressed.

C. Initially bypassed; bypass is removed immediately after the STOP pushbutton is depressed.

D. Initially bypassed; bypass is removed following a preset time delay after the STOP pushbutton is depressed.

ANSWER: C.

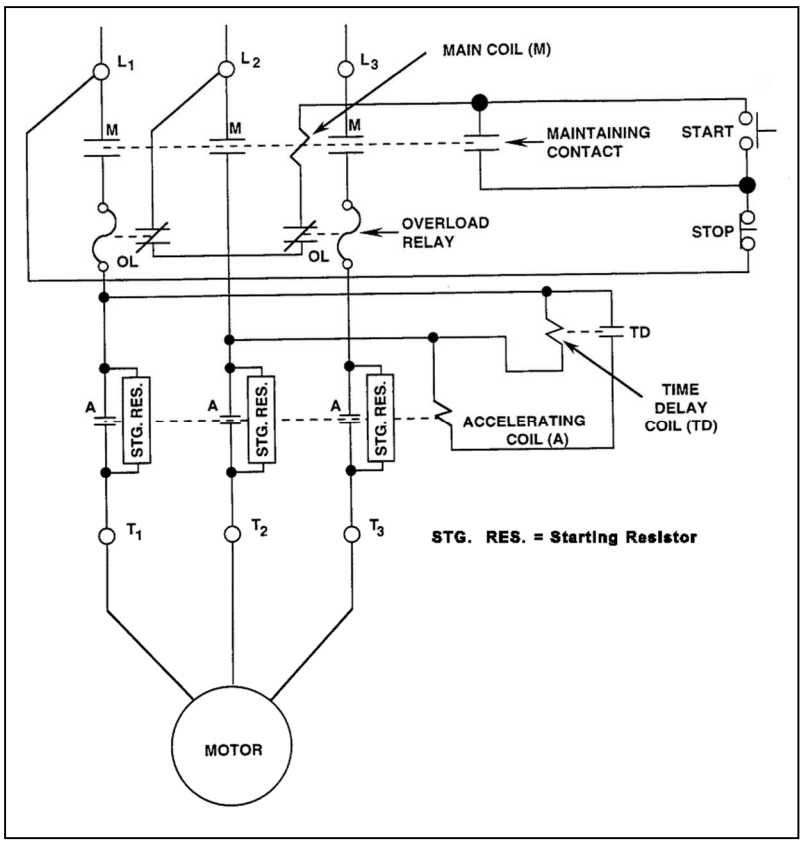

TOPIC: 191008
KNOWLEDGE: K1.06 [2.3/2.6]
QID: P4521 (B4521)

Refer to the drawing of a valve motor control circuit (see figure below) for a valve that is currently fully closed and has a 10-second stroke time.

Note: Limit switch (LS) contacts are shown open regardless of valve position, but relay contacts are shown open/closed according to the standard convention for control circuit drawings.

Which one of the following describes the valve response if the control switch is taken to the OPEN position for two seconds and then released?

A. The valve will not move.

B. The valve will open fully.

C. The valve will begin to open and then stop moving.

D. The valve will begin to open and then close fully.

ANSWER: C.

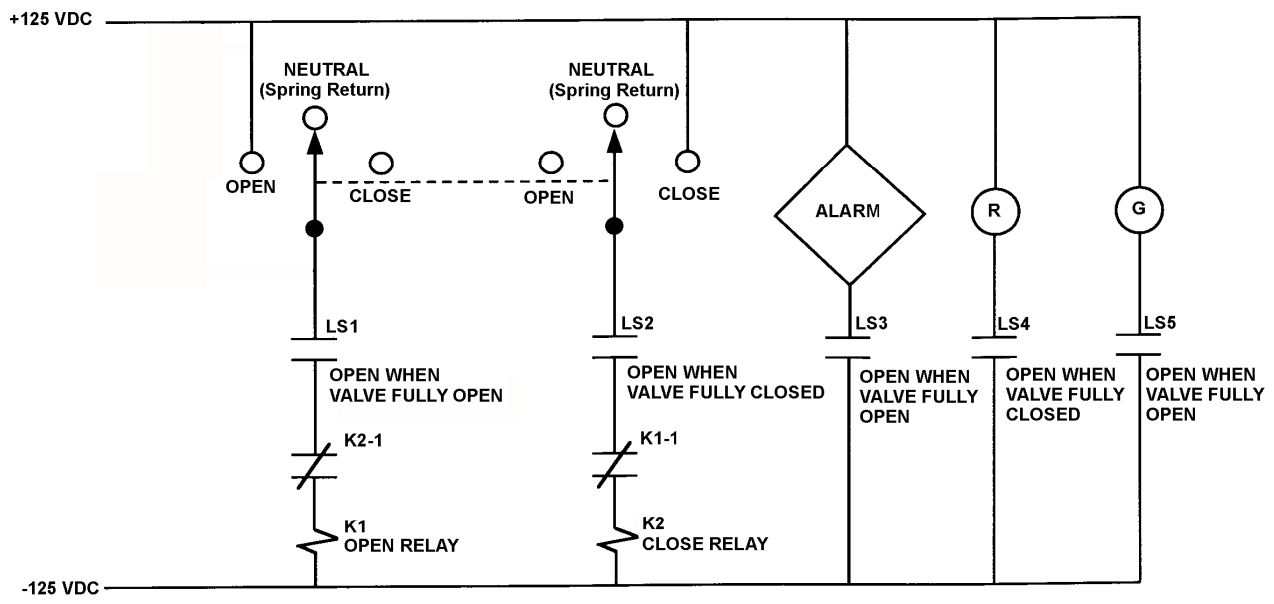

VALVE MOTOR CONTROL CIRCUIT

TOPIC: 191008
KNOWLEDGE: K1.06 [2.3/2.6]
QID: P5120 (B5121)

Refer to the drawing of a motor and its control circuit (see figure below).

Note: Relay contacts are shown open/closed according to the standard convention for control circuit drawings.

The motor has been idle for several days when it is decided to start the motor. What is the status of the starting resistors before and after the motor START pushbutton is depressed?

A. Initially bypassed; bypass is removed immediately after the START pushbutton is depressed.

B. Initially bypassed; bypass is removed following a preset time delay after the START pushbutton is depressed.

C. Initially inserted in the motor circuit; bypassed immediately after the START pushbutton is depressed.

D. Initially inserted in the motor circuit; bypassed following a preset time delay after the START pushbutton is depressed.

ANSWER: D.

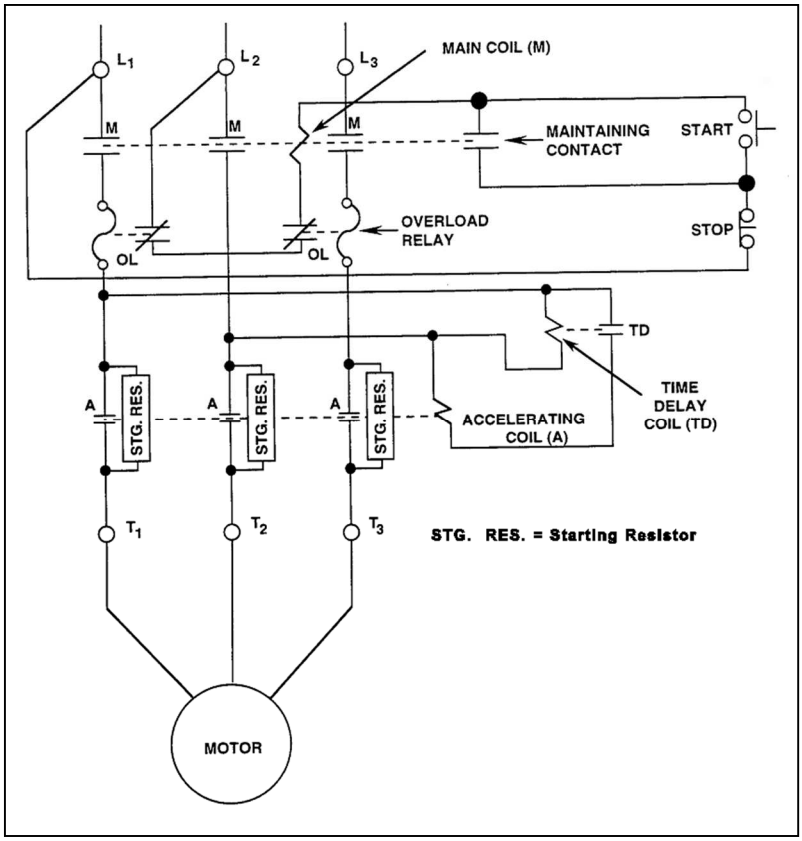

TOPIC: 191008
KNOWLEDGE: K1.06 [2.3/2.6]
QID: P5221 (B5222)

Refer to the drawing of a valve motor control circuit (see figure below) for a valve that is currently fully open and has a 10-second stroke time.

Note: Limit switch (LS) contacts are shown open regardless of valve position, but relay contacts are shown open/closed according to the standard convention for control circuit drawings.

The operator takes the control switch to CLOSE. Two seconds later, after verifying the valve is closing, the operator releases the control switch. Which one of the following describes the valve motor control circuit alarm response after the switch is released?

A. The alarm will continue to actuate for approximately 8 seconds.

B. The alarm will continue to actuate until additional operator action is taken.

C. The alarm will actuate after approximately 8 seconds.

D. The alarm will <u>not</u> actuate until additional operator action is taken.

ANSWER: B.

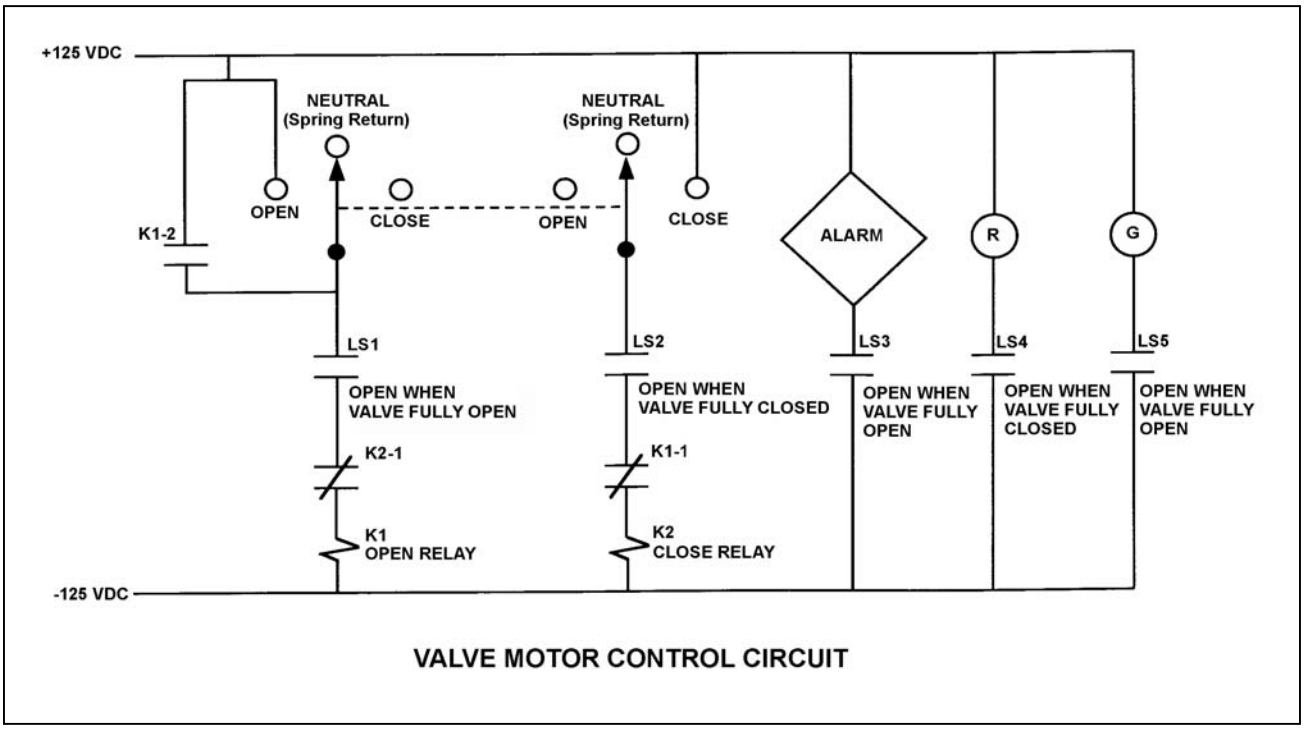

VALVE MOTOR CONTROL CIRCUIT

TOPIC: 191008
KNOWLEDGE: K1.06 [2.3/2.6]
QID: P5421 (B5421)

Refer to the drawing of a valve motor control circuit (see figure below).

Note: Limit switch (LS) contacts are shown open regardless of valve position, but relay contacts are shown open/closed according to the standard convention for control circuit drawings.

Which one of the following will actuate the alarm?

A. With the valve partially closed, the control switch is taken to the CLOSE position.

B. With the valve partially closed, the control switch is taken to the OPEN position.

C. With the valve fully open, the control switch is taken to the CLOSE position.

D. With the valve fully open, the control switch is taken to the OPEN position.

ANSWER: B.

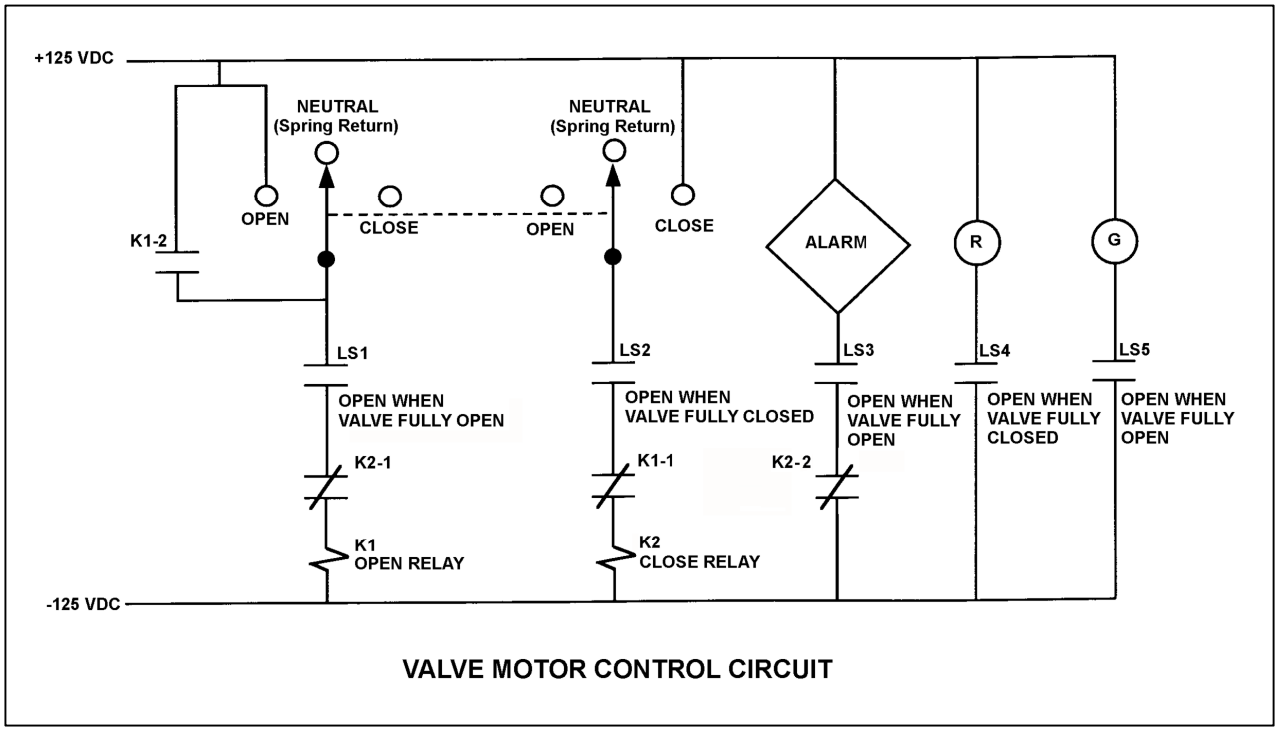

VALVE MOTOR CONTROL CIRCUIT

TOPIC: 191008
KNOWLEDGE: K1.06 [2.3/2.6]
QID: P5920 (B5922)

Refer to the drawing of a valve motor control circuit (see figure below) for a valve that is currently fully open and has a 10-second stroke time.

Note: Limit switch (LS) contacts are shown open regardless of valve position, but relay contacts are shown open/closed according to the standard convention for control circuit drawings.

The operator takes the control switch to CLOSE momentarily and the valve begins to close. Five seconds later, the operator takes the switch to OPEN momentarily and then releases the switch. Which one of the following describes the valve response after the switch is released?

A. The valve will stop closing and remain partially open.

B. The valve will stop closing and then go fully open.

C. The valve will close fully and remain fully closed.

D. The valve will close fully and then go fully open.

ANSWER: C.

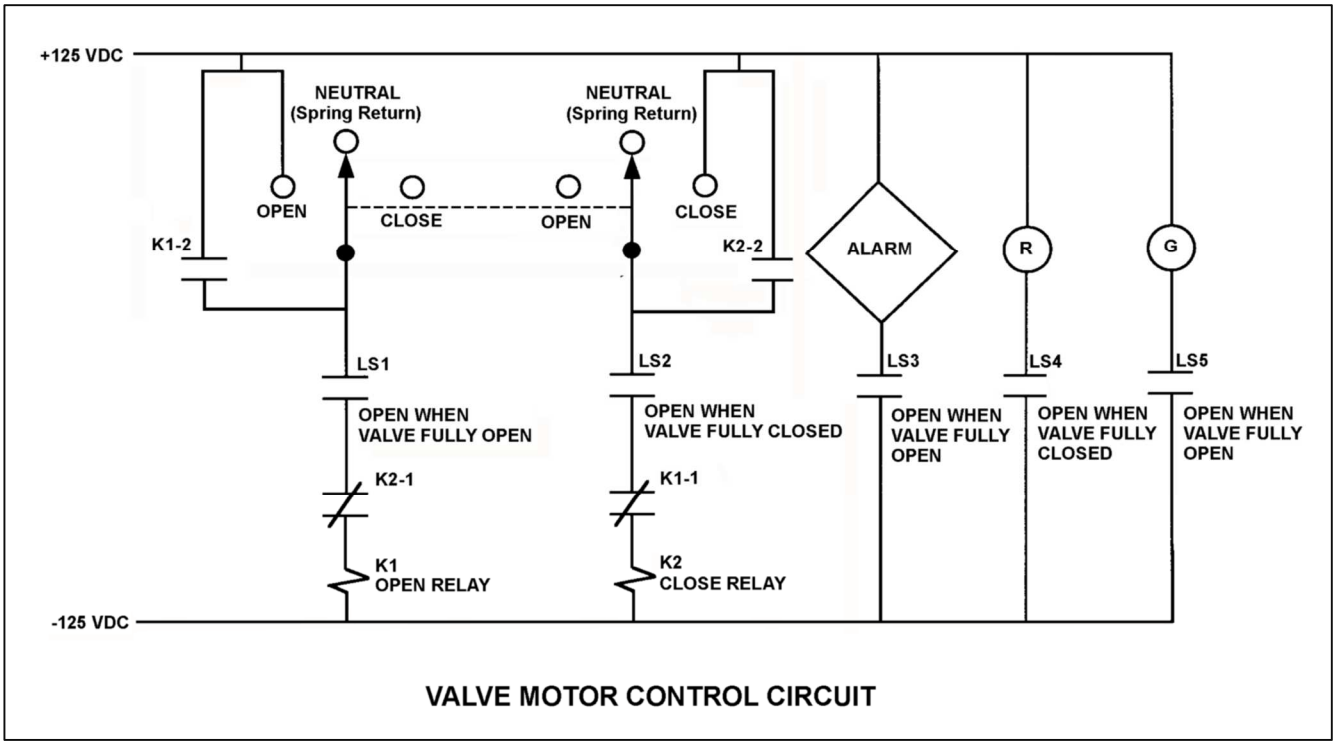

VALVE MOTOR CONTROL CIRCUIT

TOPIC: 191008
KNOWLEDGE: K1.06 [2.3/2.6]
QID: P6820 (B6822)

Refer to the drawing of a valve motor control circuit (see figure below) for a valve that is currently fully closed and has a 10-second stroke time.

Note: Limit switch (LS) contacts are shown open regardless of valve position, but relay contacts are shown open/closed according to the standard convention for control circuit drawings.

An operator takes the control switch to OPEN momentarily and the valve begins to open. Five seconds later, the operator takes the control switch to CLOSE momentarily and releases the switch. Which one of the following describes the valve response when the control switch is taken to CLOSE momentarily and released?

A. The valve will stop opening and remain partially open.

B. The valve will stop opening and then go fully closed.

C. The valve will open fully and remain fully open.

D. The valve will open fully and then go fully closed.

ANSWER: A.

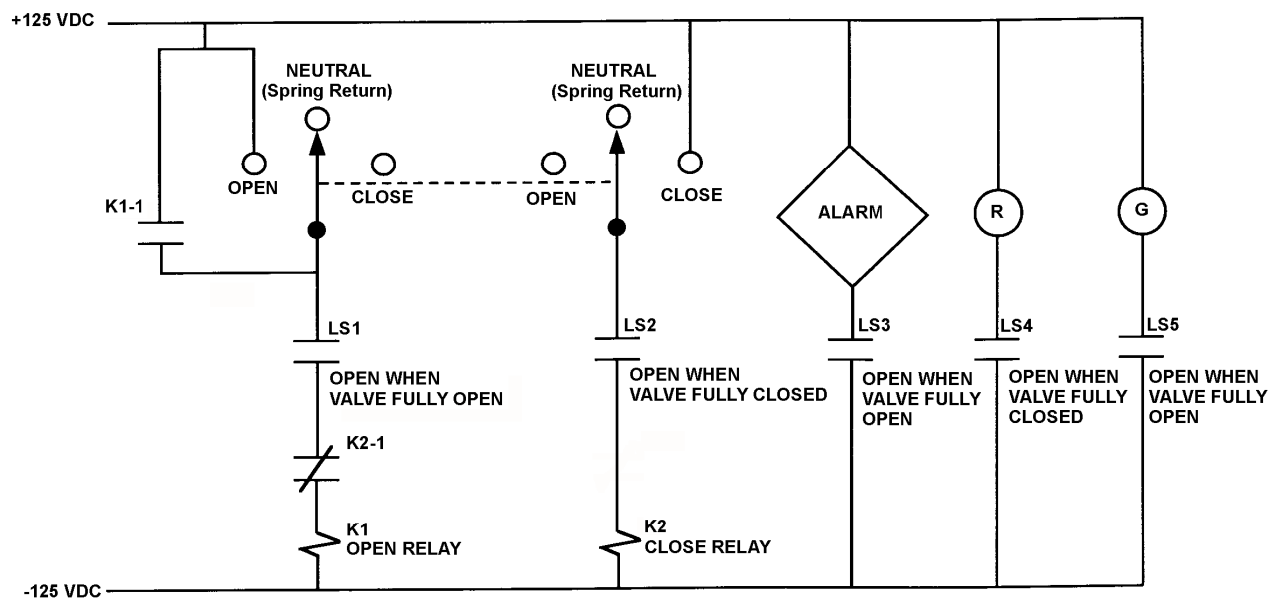

VALVE MOTOR CONTROL CIRCUIT

TOPIC: 191008
KNOWLEDGE: K1.06 [2.3/2.6]
QID: P7122 (B7121)

Refer to the drawing of a valve motor control circuit (see figure below) for a valve that is currently fully closed and has a 10-second stroke time.

Note: Limit switch (LS) contacts are shown open regardless of valve position, but relay contacts are shown open/closed according to the standard convention for control circuit drawings.

The operator takes the control switch to OPEN momentarily and the valve begins to open. Five seconds later, the operator takes the switch to CLOSE momentarily and then releases the switch. Which one of the following describes the valve response after the switch is released?

A. The valve will stop opening and remain partially open.

B. The valve will stop opening and then go fully closed.

C. The valve will open fully and remain fully open.

D. The valve will open fully and then go fully closed.

ANSWER: C.

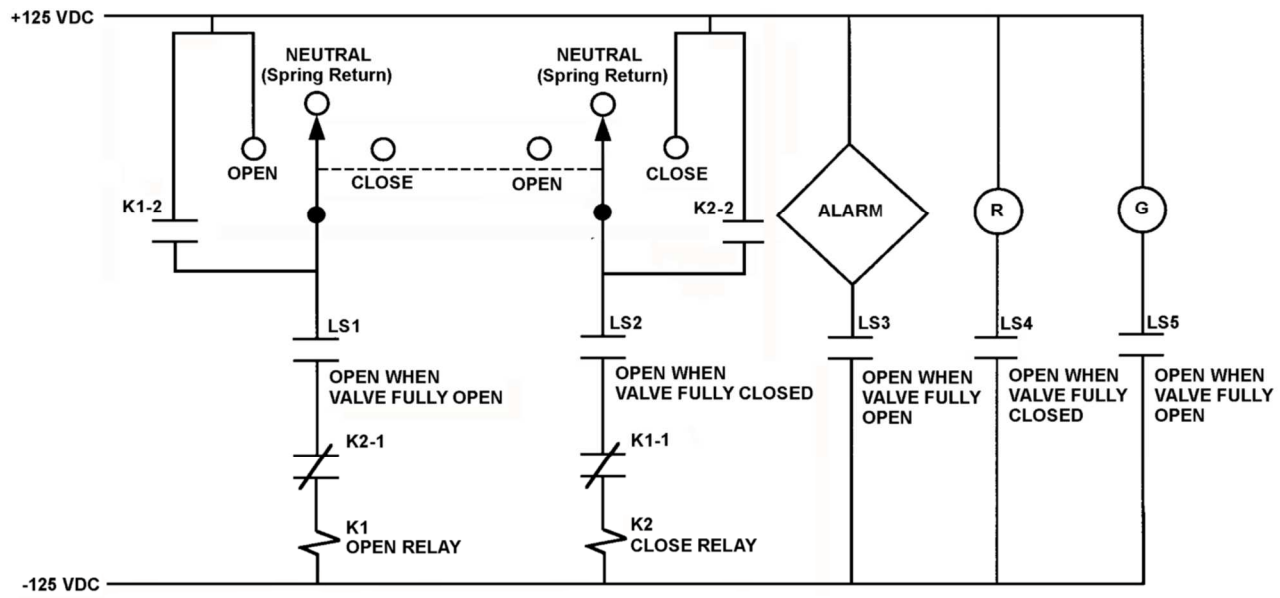

VALVE MOTOR CONTROL CIRCUIT

TOPIC: 191008
KNOWLEDGE: K1.06 [2.3/2.6]
QID: P7421 (B7421)

Refer to the drawing of a valve motor control circuit (see figure below) for a valve that is currently fully open and has a 10-second stroke time.

Note: Limit switch (LS) contacts are shown open regardless of valve position, but relay contacts are shown open/closed according to the standard convention for control circuit drawings.

The operator takes the control switch to CLOSE. Two seconds later, after verifying the valve is closing, the operator releases the control switch. Which one of the following describes the valve motor control circuit alarm response after the switch is released?

A. The alarm will continue to actuate for approximately 8 seconds.

B. The alarm will continue to actuate until additional operator action is taken.

C. The alarm will actuate after approximately 8 seconds.

D. The alarm will <u>not</u> actuate until additional operator action is taken.

ANSWER: A.

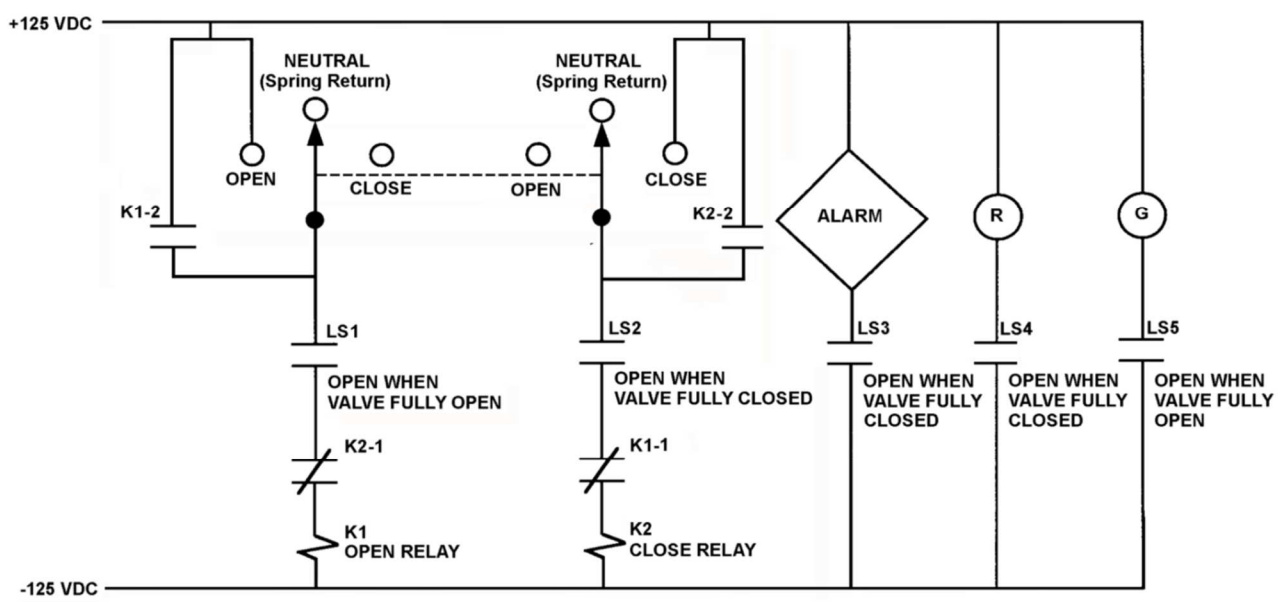

VALVE MOTOR CONTROL CIRCUIT

TOPIC: 191008
KNOWLEDGE: K1.06 [2.3/2.6]
QID: P7646 (B7646)

Refer to the drawing of a valve motor control circuit (see figure below) for a valve that is currently fully open and has a 16-second stroke time.

Note: Limit switch (LS) contacts are shown open regardless of valve position, but relay contacts are shown open/closed according to the standard convention for control circuit drawings.

An operator takes the control switch to CLOSE. Two seconds later, after verifying the valve is closing, the operator releases the control switch. When the valve stops moving, what will be the status of the alarm and the red (R) and green (G) indicating lights?

	Alarm	Red Ind. Light	Green Ind. Light
A.	On	On	On
B.	On	Off	On
C.	Off	On	Off
D.	Off	Off	Off

ANSWER: A.

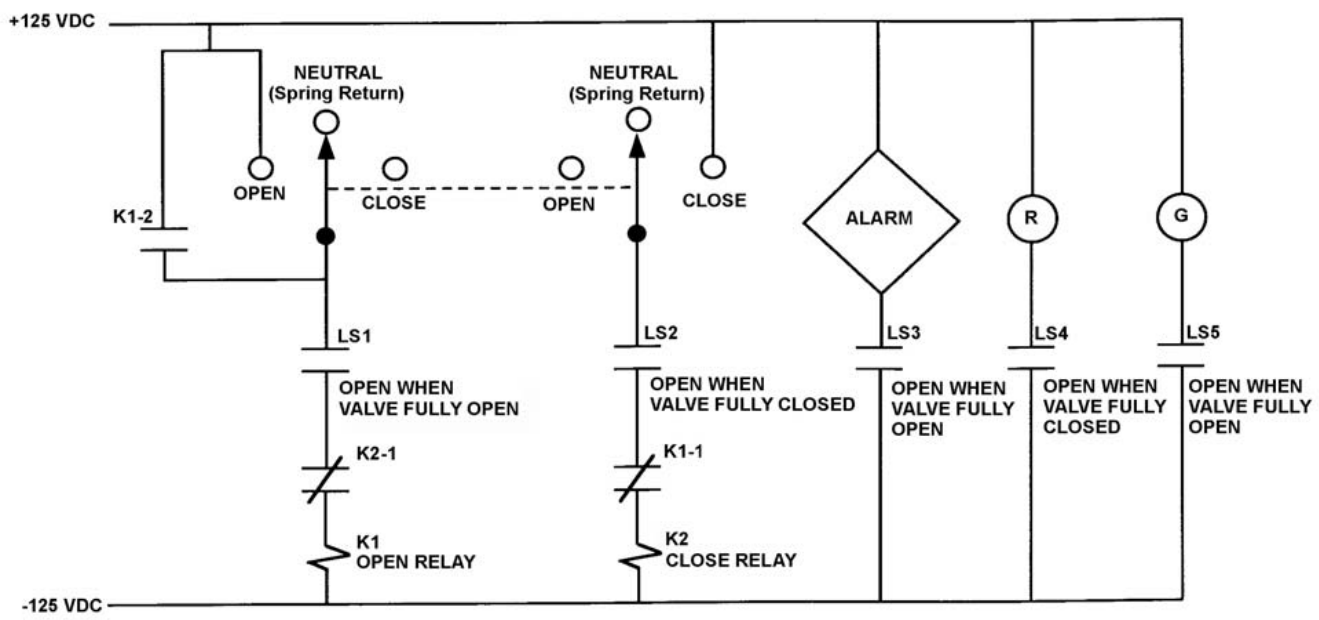

VALVE MOTOR CONTROL CIRCUIT

TOPIC: 191008
KNOWLEDGE: K1.06 [2.3/2.6]
QID: P7666 (B7666)

Refer to the drawing of a valve motor control circuit (see figure below) for a valve that is currently fully open and has a 10-second stroke time.

Note: Limit switch (LS) contacts are shown open regardless of valve position, but relay contacts are shown open/closed according to the standard convention for control circuit drawings.

The operator takes the control switch to CLOSE. Two seconds later, after verifying the valve is closing, the operator releases the control switch. Which one of the following describes the valve motor control circuit alarm response after the switch is released?

A. The alarm will actuate after approximately 8 seconds.

B. The alarm will <u>not</u> actuate until additional operator action is taken.

C. The alarm will continue to actuate for approximately 8 seconds.

D. The alarm will continue to actuate until additional operator action is taken.

ANSWER: B.

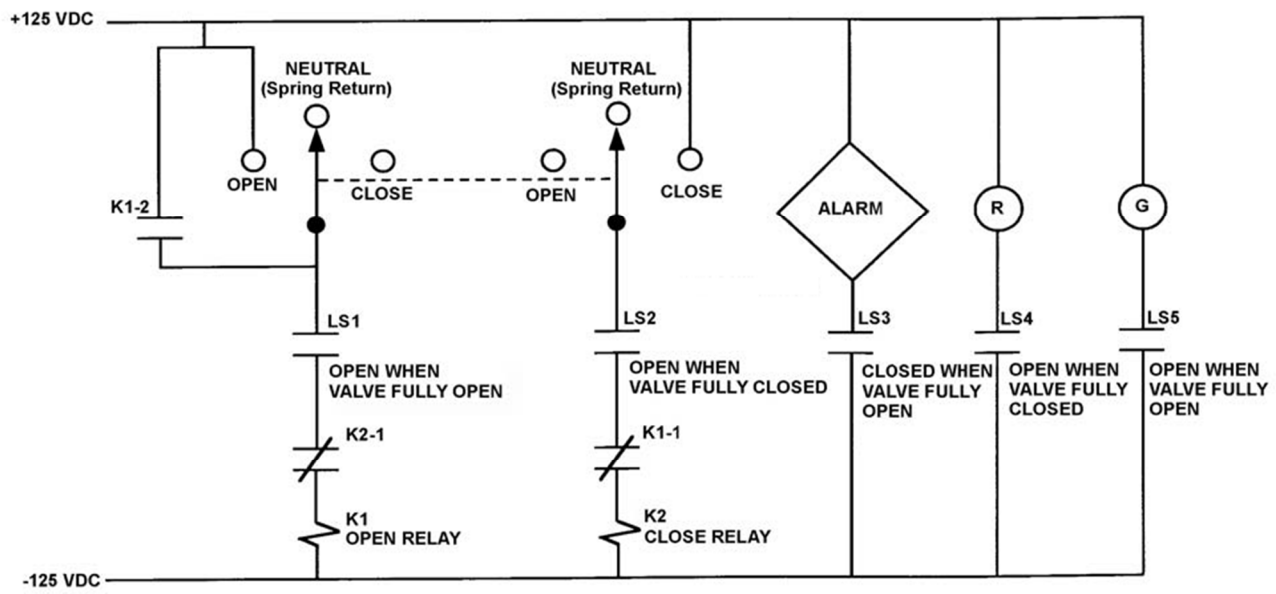

VALVE MOTOR CONTROL CIRCUIT

TOPIC: 191008
KNOWLEDGE: K1.06 [2.3/2.6]
QID: P7686 (B7686)

Refer to the drawing of a valve motor control circuit (see figure below) for a valve that is currently fully open and has a 16-second stroke time.

Note: Limit switch (LS) contacts are shown open regardless of valve position, but relay contacts are shown open/closed according to the standard convention for control circuit drawings.

An operator takes the control switch to CLOSE. Two seconds later, after verifying the valve is closing, the operator releases the control switch. When the valve stops moving, what will be the status of the alarm and the red (R) and green (G) indicating lights?

	Alarm	Red Ind. Light	Green Ind. Light
A.	On	On	On
B.	On	Off	Off
C.	Off	On	Off
D.	Off	Off	On

ANSWER: D.

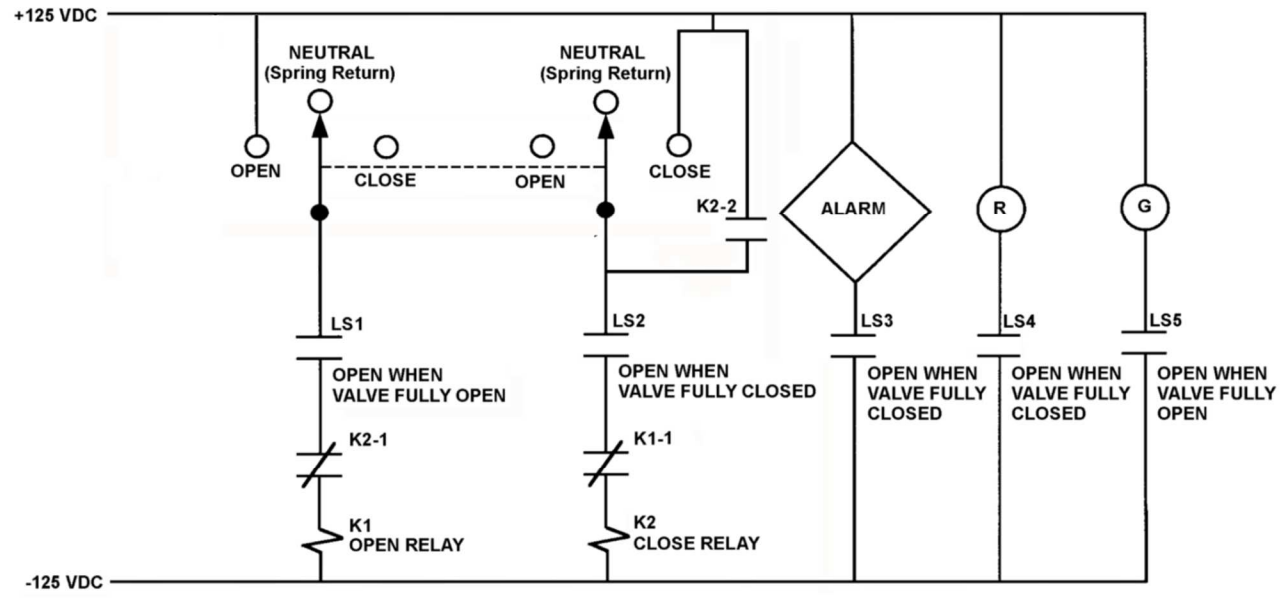

VALVE MOTOR CONTROL CIRCUIT

TOPIC: 191008
KNOWLEDGE: K1.07 [3.0/3.3]
QID: P1141 (B1142)

Which one of the following is an unsafe practice if performed while working on or near energized electrical equipment?

A. Using two hands for balance and to prevent dropping tools onto energized equipment.

B. Standing on insulating rubber material to increase the electrical resistance of the body to ground.

C. Having a person stand by to deenergize the equipment in the event of an emergency.

D. Covering exposed energized circuits with insulating material to prevent inadvertent contact.

ANSWER: A.

TOPIC: 191008
KNOWLEDGE: K1.07 [3.0/3.3]
QID: P1241 (B842)

A 480 VAC motor is supplied power via an electrical disconnect in series with a breaker. Which one of the following describes the proper operations to isolate power to the motor?

A. Open the disconnect first, then the breaker.

B. Open the breaker first, then the disconnect.

C. Open the device that is closest to the motor first.

D. Open the device that is closest to the power source first.

ANSWER: B.

TOPIC: 191008
KNOWLEDGE: K1.07 [3.0/3.3]
QID: P2940 (B3141)

Which one of the following is an unsafe practice if performed while working on or near energized electrical equipment?

A. Use insulated tools to prevent inadvertent contact with adjacent equipment.

B. Cover exposed energized circuits with insulating material to prevent inadvertent contact.

C. Attach a metal strap from your body to a nearby neutral ground to ensure that you are grounded.

D. Have a person standing by with the ability to remove you from the equipment in the event of an emergency.

ANSWER: C.

TOPIC: 191008
KNOWLEDGE: K1.08 [3.3/3.5]
QID: P41 (B342)

The primary reason for isolating emergency electrical loads from their power supply bus prior to energizing the bus via the emergency diesel generator is to prevent an...

A. overcurrent condition on the generator.

B. overcurrent condition on the loads.

C. underfrequency condition on the generator.

D. underfrequency condition on the loads.

ANSWER: A.

TOPIC: 191008
KNOWLEDGE: K1.08 [3.3/3.5]
QID: P43 (B1941)

A main generator is being connected to an infinite power grid that is operating at 60 Hz. Generator output voltage is equal to the grid voltage but generator frequency is at 57 Hz.

Which one of the following generator conditions is most likely to occur if the generator output breaker is closed with voltages in phase (synchronized), but with the existing frequency difference? (Assume no generator breaker protective trip occurs.)

A. Reverse power

B. Underfrequency

C. Undervoltage

D. Overspeed

ANSWER: A.

TOPIC: 191008
KNOWLEDGE: K1.08 [3.3/3.5]
QID: P107 (B122)

Closing the output breaker of a three-phase generator onto a deenergized bus can...

A. produce an overvoltage condition on the bus.

B. produce an overcurrent condition on the generator if the bus was not first unloaded.

C. result in a reverse power trip of the generator circuit breaker if generator frequency is low.

D. result in large reactive currents in the generator.

ANSWER: B.

TOPIC: 191008
KNOWLEDGE: K1.08 [3.3/3.5]
QID: P241 (B1843)

A main generator is being paralleled to an infinite power grid. Closing the output breaker of the generator with the frequency of the generator 0.1 Hz higher than grid frequency will result in the generator...

A. behaving as a real load to the grid.

B. behaving as a reactive load to the grid.

C. supplying a portion of the grid reactive load.

D. supplying a portion of the grid real load.

ANSWER: D.

TOPIC: 191008
KNOWLEDGE: K1.08 [3.3/3.5]
QID: P242 (B243)

Which one of the following generator conditions is most likely to result in equipment damage from high current flow?

A. Tripping the output breaker under full-load conditions.

B. Tripping the generator prime mover under full-load conditions.

C. Closing the output breaker onto a bus that has a short-circuit fault.

D. Closing the output breaker onto a bus that has an open-circuit fault.

ANSWER: C.

TOPIC: 191008
KNOWLEDGE: K1.08 [3.3/3.5]
QID: P340

A main generator is about to be connected to an infinite power grid. Closing the generator output breaker with the generator voltage slightly lower than grid voltage and with generator frequency slightly higher than grid frequency will initially result in: (Assume no generator breaker protective trip occurs.)

A. the generator supplying reactive power to the grid.

B. the generator attaining a leading power factor.

C. the generator acting as a real load to the grid.

D. motoring of the generator.

ANSWER: B.

TOPIC: 191008
KNOWLEDGE: K1.08 [3.3/3.5]
QID: P341 (B343)

A main generator is being paralleled to the power grid. Generator voltage has been properly adjusted and the synchroscope is rotating slowly in the clockwise direction.

The generator breaker must be closed just as the synchroscope pointer reaches the 12 o'clock position to prevent...

A. motoring of the generator, due to unequal frequencies.

B. excessive MW load transfer to the generator, due to unequal frequencies.

C. excessive MW load transfer to the generator, due to out-of-phase voltages.

D. excessive arcing within the generator output breaker, due to out-of-phase voltages.

ANSWER: D.

TOPIC: 191008
KNOWLEDGE: K1.08 [3.3/3.5]
QID: P441 (B440)

During paralleling operations of the main generator to an infinite power grid, closing the generator output breaker with the frequency of the generator at 61 hertz and the grid frequency at 60 hertz will...

A. cause the generator to immediately increase load.

B. trip open the generator breaker on reverse power.

C. cause the generator voltage to increase.

D. cause the generator current to decrease.

ANSWER: A.

TOPIC: 191008
KNOWLEDGE: K1.08 [3.3/3.5]
QID: P743 (B743)

Which one of the following evolutions will draw the highest current from the main generator during operation of the output breaker?

A. Opening the output breaker under full-load conditions.

B. Opening the output breaker under no-load conditions.

C. Closing the output breaker with voltages out of phase.

D. Closing the output breaker with voltages in phase.

ANSWER: C.

TOPIC: 191008
KNOWLEDGE: K1.08 [3.3/3.5]
QID: P940

Under which one of the following preexisting conditions will closing a circuit breaker between two electrical generators cause a sudden large and possibly damaging mechanical torque to be exerted on both of the generators?

A. One generator is supplying a 3 percent higher voltage than the other.

B. One generator is supplying a 3 percent higher frequency than the other.

C. The voltage of one generator is out of phase with the other by 30°.

D. The capacity of one generator is twice that of the other generator.

ANSWER: C.

TOPIC: 191008
KNOWLEDGE: K1.08 [3.3/3.5]
QID: P1143 (B1143)

A main generator is about to be connected to an infinite power grid with the following conditions:

Generator frequency	=	59.5 Hz
Grid frequency:	=	59.8 Hz
Generator voltage:	=	115.1 KV
Grid voltage:	=	114.8 KV

When the generator output breaker is closed, the generator will...

A. acquire real load and reactive load.

B. acquire real load but become a reactive load to the grid.

C. become a real load to the grid but acquire reactive load.

D. become a real load and a reactive load to the grid.

ANSWER: C.

TOPIC: 191008
KNOWLEDGE: K1.08 [3.3/3.5]
QID: P1242

A main generator is about to be connected to an infinite power grid. Closing the generator output breaker with generator and grid voltages matched, but with generator frequency lower than grid frequency will initially result in the generator...

A. picking up a portion of the grid real load.

B. picking up a portion of the grid reactive load.

C. experiencing reverse power conditions.

D. experiencing overspeed conditions.

ANSWER: C.

TOPIC: 191008
KNOWLEDGE: K1.08 [3.3/3.5]
QID: P1342

A main generator is about to be connected to an infinite power grid. Closing the generator output breaker with the _____ of the generator higher than that of the grid will initially result in generator real load _____.

A. frequency; decreasing

B. frequency; increasing

C. voltage; decreasing

D. voltage; increasing

ANSWER: B.

TOPIC: 191008
KNOWLEDGE: K1.08 [3.3/3.5]
QID: P1542

A main generator is about to be connected to an infinite power grid. Closing the generator output breaker with generator and grid voltages matched, but with generator frequency 0.1 Hz higher than grid frequency will initially result in the generator...

A. picking up a portion of the grid real load.

B. picking up a portion of the grid reactive load.

C. experiencing reverse power conditions.

D. experiencing overspeed conditions.

ANSWER: A.

TOPIC: 191008
KNOWLEDGE: K1.08 [3.3/3.5]
QID: P1642

A main generator is about to be connected to an infinite power grid with the following conditions:

Generator frequency	= 59.8 Hz
Grid frequency	= 59.5 Hz
Generator voltage	= 114.8 KV
Grid voltage	= 115.1 KV

When the generator output breaker is closed, the generator will initially...

A. acquire real load and reactive load.

B. acquire real load, but become a reactive load to the grid.

C. become a real load to the grid, but acquire reactive load.

D. become a real load and a reactive load to the grid.

ANSWER: B.

TOPIC: 191008
KNOWLEDGE: K1.08 [3.3/3.5]
QID: P1741 (B1744)

A main generator is being paralleled to an infinite power grid. Generator voltage has been properly adjusted and the synchroscope is rotating slowly in the counterclockwise direction.

If the generator breaker is closed just prior to the synchroscope pointer reaching the 12 o'clock position, which one of the following is most likely to occur?

A. The breaker will close and the generator will supply only MW to the grid.

B. The breaker will close and the generator will supply both MW and MVAR to the grid.

C. The breaker will close and then open due to overcurrent.

D. The breaker will close and then open due to reverse power.

ANSWER: D.

TOPIC: 191008
KNOWLEDGE: K1.08 [3.3/3.5]
QID: P1839 (B43)

A main generator is being connected to an infinite power grid. Which one of the following will occur if the generator output breaker is closed with generator frequency 0.1 Hz lower than power grid frequency? (Assume that no generator protection relay actuates.)

A. The generator will motorize.

B. The generator will accept too much load.

C. The voltage of the generator will decrease to compensate for the lower frequency.

D. The entire connected system will operate at the frequency of the lowest frequency (the oncoming) generator.

ANSWER: A.

TOPIC: 191008
KNOWLEDGE: K1.08 [3.3/3.5]
QID: P1842 (B1240)

A main generator is being prepared for paralleling with an infinite power grid. Which one of the following indicates that the main generator and grid voltages are in phase?

A. The synchroscope pointer is at the 12 o'clock position.

B. The frequency of the generator is equal to the frequency of the grid.

C. The synchroscope pointer is turning slowly in the clockwise direction.

D. The synchroscope pointer is turning slowly in the counterclockwise direction.

ANSWER: A.

TOPIC: 191008
KNOWLEDGE: K1.08 [3.3/3.5]
QID: P2040 (B2042)

A main generator is about to be connected to an infinite power grid. Which one of the following conditions will cause the main generator to immediately supply reactive power (MVAR) to the grid when the generator output breaker is closed?

A. Generator voltage is slightly higher than grid voltage.

B. Generator voltage is slightly lower than grid voltage.

C. The synchroscope is turning slowly in the clockwise direction.

D. The synchroscope is turning slowly in the counterclockwise direction.

ANSWER: A.

TOPIC: 191008
KNOWLEDGE: K1.08 [3.3/3.5]
QID: P2044 (B2043)

Two identical 1,000 MW electrical generators are being connected to the same electrical bus. Generator A is currently supplying the bus. Generator A and B output indications are as follows:

Generator A	Generator B
4,160 Volts	4,140 Volts
60.2 Hertz	60.8 Hertz
25 MW	0 MW
10 MVAR	0 MVAR

When the output breaker for generator B is closed, which generator is more likely to trip on reverse power?

A. Generator A, due to the higher initial voltage.

B. Generator A, due to the lower initial frequency.

C. Generator B, due to the lower initial voltage.

D. Generator B, due to the higher initial frequency.

ANSWER: B.

TOPIC: 191008
KNOWLEDGE: K1.08 [3.3/3.5]
QID: P2143 (B2044)

A main generator is about to be connected to an infinite power grid. Generator voltage equals grid voltage and the synchroscope is rotating slowly in the clockwise direction. The generator breaker is closed just as the synchroscope pointer reaches the 12 o'clock position.

Which one of the following will occur after the breaker is closed?

A. The breaker will remain closed and the generator will supply only MW to the grid.

B. The breaker will remain closed and the generator will supply both MW and MVAR to the grid.

C. The breaker will trip open due to overcurrent.

D. The breaker will trip open due to reverse power.

ANSWER: A.

TOPIC: 191008
KNOWLEDGE: K1.08 [3.3/3.5]
QID: P2240

A main generator is being prepared for paralleling with an infinite power grid. Which one of the following indicates that the generator and grid voltages are in phase?

A. The voltage of the generator is equal to the voltage of the grid.

B. The frequency of the generator is equal to the frequency of the grid.

C. The synchroscope pointer is turning slowly in the clockwise direction.

D. The synchroscope pointer is passing through the 12 o'clock position.

ANSWER: D.

TOPIC: 191008
KNOWLEDGE: K1.08 [3.3/3.5]
QID: P2244

An isolated electrical bus is being supplied by generator A. Generator B is about to be connected to the same electrical bus. Generators A and B are both rated at 1,000 MW. Generator A and B output indications are as follows:

Generator A	Generator B
4,140 Volts	4,160 Volts
60.8 Hertz	60.2 Hertz
25 MW	0 MW
10 MVAR (out)	0 MVAR

When the output breaker for generator B is closed, which generator is more likely to trip on reverse power?

A. Generator A, due to the lower initial voltage.

B. Generator A, due to the higher initial frequency.

C. Generator B, due to the higher initial voltage.

D. Generator B, due to the lower initial frequency.

ANSWER: D.

TOPIC: 191008
KNOWLEDGE: K1.08 [3.3/3.5]
QID: P2343 (B2343)

A main generator is about to be connected to an infinite power grid. Generator voltage is slightly higher than grid voltage and the synchroscope is rotating slowly in the clockwise direction. The generator breaker is closed just as the synchroscope pointer reaches the 12 o'clock position.

Which one of the following will occur after the breaker is closed?

A. The breaker will remain closed and the generator will supply only MW to the grid.

B. The breaker will remain closed and the generator will supply both MW and MVAR to the grid.

C. The breaker will open due to overcurrent.

D. The breaker will open due to reverse power.

ANSWER: B.

TOPIC: 191008
KNOWLEDGE: K1.08 [3.3/3.5]
QID: P2440 (B2643)

A main generator is being prepared for paralleling with an infinite power grid. At which one of the following synchroscope pointer positions is the main generator output voltage the farthest out of phase with the grid voltage?

A. 3 o’clock

B. 6 o’clock

C. 9 o’clock

D. 12 o’clock

ANSWER: B.

TOPIC: 191008
KNOWLEDGE: K1.08 [3.3/3.5]
QID: P2441 (B2443)

A main generator is about to be connected to an infinite power grid. Generator voltage is equal to grid voltage and the synchroscope is rotating slowly in the counterclockwise direction. The generator breaker is closed just prior to the synchroscope pointer reaching the 12 o'clock position.

Which one of the following is most likely to occur after the breaker is closed?

A. The breaker will remain closed and the generator will supply only MW to the grid.

B. Thee breaker will remain closed and the generator will supply both MW and MVAR to the grid.

C. The breaker will open due to overcurrent.

D. The breaker will open due to reverse power.

ANSWER: D.

TOPIC: 191008
KNOWLEDGE: K1.08 [3.3/3.5]
QID: P2642 (B2843)

A main generator is about to be connected to an infinite power grid. Generator voltage is slightly higher than grid voltage and the synchroscope is rotating slowly in the clockwise direction. The generator breaker is closed just as the synchroscope pointer reaches the 3 o'clock position.

Which one of the following is most likely to occur after the breaker is closed?

A. The breaker will remain closed and the generator will supply only MW to the grid.

B. The breaker will remain closed and the generator will supply both MW and MVAR to the grid.

C. The breaker will open due to overcurrent.

D. The breaker will open due to reverse power.

ANSWER: C.

TOPIC: 191008
KNOWLEDGE: K1.08 [3.3/3.5]
QID: P2743 (B2742)

A main generator is being paralleled to an infinite power grid with the following conditions:

Generator frequency = 59.9 Hz
Grid frequency = 60.1 Hz
Generator voltage = 114.8 KV
Grid voltage = 115.1 KV

When the generator output breaker is closed, the generator will...

A. acquire real load and reactive load.

B. acquire real load, but become a reactive load to the grid.

C. become a real load to the grid, but acquire reactive load.

D. become a real load and a reactive load to the grid.

ANSWER: D.

TOPIC: 191008
KNOWLEDGE: K1.08 [3.3/3.5]
QID: P2943

A main generator is about to be connected to an infinite power grid with the following conditions:

Generator frequency = 60.1 Hz
Grid frequency = 59.9 Hz
Generator voltage = 115.1 KV
Grid voltage = 114.8 KV

When the generator output breaker is closed, the generator will...

A. acquire real load and reactive load.

B. acquire real load, but become a reactive load to the grid.

C. become a real load to the grid, but acquire reactive load.

D. become a real load and a reactive load to the grid.

ANSWER: A.

TOPIC: 191008
KNOWLEDGE: K1.08 [3.3/3.5]
QID: P3142 (B3130)

A nuclear power plant was initially operating at 80 percent power in the middle of a fuel cycle with the main generator connected to an infinite power grid with the following main generator output parameters:

60 Hz
25 KV
300 MVAR (out)
800 MW

A hydraulic oil system malfunction occurred that caused the main turbine steam inlet valves to slowly drift closed. After 10 minutes, the main generator real load decreased to 600 MW. Assuming no operator actions were taken, how were the remaining main generator output parameters affected after the above 10 minute period?

	Frequency (Hz)	Voltage (KV)	Reactive Load (MVAR)
A.	Decreased	Decreased	No change
B.	Decreased	No change	Decreased
C.	No change	No change	No change
D.	No change	Decreased	Decreased

ANSWER: C.

TOPIC: 191008
KNOWLEDGE: K1.08 [3.3/3.5]
QID: P3841 (B3842)

Which one of the following will cause the most damage to the contact surfaces of a main generator output breaker?

A. An operator attempts to close the main generator output breaker with the generator and power grid frequencies matched but with voltages 180 degrees out of phase.

B. An operator attempts to close the main generator output breaker with the generator and power grid voltages in phase but with generator frequency 0.5 percent higher than power grid frequency.

C. The main generator output breaker automatically trips open on a loss of offsite power while the main generator is operating at its minimum rated load.

D. The main generator output breaker automatically trips open on a loss of offsite power while the main generator is operating at its maximum rated load.

ANSWER: A.

TOPIC: 191008
KNOWLEDGE: K1.08 [3.3/3.5]
QID: P4321 (B4321)

A main generator is about to be connected to an infinite power grid. The main generator has the following initial conditions:

Generator frequency	= 59.9 Hz	Generator voltage	= 115.1 KV
Grid frequency	= 60.1 Hz	Grid voltage	= 114.8 KV

When the generator output breaker is closed, the generator will...

A. acquire real load and reactive load.

B. acquire real load, but become a reactive load to the grid.

C. become a real load and a reactive load to the grid.

D. become a real load to the grid, but acquire reactive load.

ANSWER: D.

TOPIC: 191008
KNOWLEDGE: K1.08 [3.3/3.5]
QID: P4322 (B4322)

During a routine inspection of a main generator output breaker, a technician discovers severely damaged main contact surfaces. Which one of the following is the most likely cause of the damaged contact surfaces?

A. The main generator breaker automatically tripped open after it was closed with the generator and power grid voltages 60 degrees out of phase.

B. The main generator breaker automatically tripped open due to a faulty trip relay actuation while the main generator was operating unloaded.

C. The main generator breaker automatically tripped open on a loss of offsite power while the main generator was operating at its maximum rated load.

D. The main generator breaker automatically tripped open after it was closed with the generator and power grid voltages in phase but with generator frequency 0.2 Hz lower than power grid frequency.

ANSWER: A.

TOPIC: 191008
KNOWLEDGE: K1.08 [3.3/3.5]
QID: P5121 (B5122)

A main generator is about to be connected to an infinite power grid. Generator output frequency is slightly higher than grid frequency and generator output voltage is equal to grid voltage.

Which one of the following situations will exist when the main generator electrical conditions stabilize immediately after the generator output breaker is closed? (Assume no additional operator actions are taken.)

A. Generator output current will be 0.

B. Generator power factor will be 0.

C. Generator output MVAR will be 0.

D. Generator output MW will be 0.

ANSWER: C.

TOPIC: 191008
KNOWLEDGE: K1.08 [3.3/3.5]
QID: P5620 (B5621)

A main generator is being connected to an infinite power grid. The following frequencies exist just prior to closing the generator output breaker:

Generator frequency = 59.9 Hz
Grid frequency = 60.1 Hz

When conditions stabilize just after the generator output breaker is closed, the generator frequency will be _____; and the grid frequency will be _____.

A. 59.9 Hz; 59.9 Hz

B. 59.9 Hz; 60.1 Hz

C. 60.0 Hz; 60.0 Hz

D. 60.1 Hz; 60.1 Hz

ANSWER: D.

TOPIC: 191008
KNOWLEDGE: K1.08 [3.3/3.5]
QID: P6321 (B6322)

A diesel generator (DG) was initially operating at 80 percent of rated load supplying an isolated electrical bus when a malfunction caused the DG output breaker to trip. The breakers for all of the bus loads--all of which are large motors--remained closed, preparing the motors to restart upon restoration of power to the bus.

The DG output breaker has been repaired. With all of the bus load breakers still closed, which one of the following will occur when the DG output breaker is closed to reenergize the bus?

A. The DG will become lightly loaded.

B. The DG will return directly to its initial load.

C. The DG will experience slight overload conditions.

D. The DG will experience severe overload conditions.

ANSWER: D.

TOPIC: 191008
KNOWLEDGE: K1.08 [3.3/3.5]
QID: P6722 (B6722)

A main generator output breaker is about to be closed to connect the main generator to the power grid via the main transformer. The main transformer voltage and frequency are as follows:

Voltage = 20,000 volts
Frequency = 60.0 Hz

Which combination of main generator voltage and frequency will ensure that the main generator will immediately supply real (MW) and reactive (MVAR) electrical power to the power grid when the main generator output breaker is closed?

A. 19,950 volts; 59.9 Hz

B. 19,950 volts; 60.1 Hz

C. 20,050 volts; 59.9 Hz

D. 20,050 volts; 60.1 Hz

ANSWER: D.

TOPIC: 191008
KNOWLEDGE: K1.08 [3.3/3.5]
QID: P7022 (B7022)

If a main generator output breaker is closed when the generator output voltage is 5 degrees out of phase with the power grid voltage, the main generator will experience a _____ stress; if the breaker remains closed and no additional operator action is taken, the main generator voltage will _____ with the grid voltage.

A. minor; remain out of phase

B. minor; become locked into phase

C. potentially damaging; remain out of phase

D. potentially damaging; become locked into phase

ANSWER: B.

TOPIC: 191008
KNOWLEDGE: K1.08 [3.3/3.5]
QID: P7626 (B7626)

If a main generator output breaker is closed when the generator output voltage is 90 degrees out of phase with the power grid voltage, the main generator will experience a _____ stress; if the breaker remains closed and no additional operator action is taken, the main generator voltage will _____ with the grid voltage.

A minor; remain out of phase

B. minor; become locked into phase

C. potentially damaging; remain out of phase

D. potentially damaging; become locked into phase

ANSWER: D.

TOPIC: 191008
KNOWLEDGE: K1.08 [3.3/3.5]
QID: P7636 (B7636)

The main generator output breaker was just closed to connect the main generator to the main transformer. Just before the breaker was closed, the following parameter values existed:

Main Generator	Main Transformer
20,000 volts	20,050 volts
60.0 Hz	59.9 Hz

With no additional operator action, the main generator stabilized with the following parameter values:

25 MW
15 MVAR (in)

Now consider this following alternate set of parameters values:

Main Generator	Main Transformer
20,020 volts	20,050 volts
60.1 Hz	59.9 Hz

If the alternate set of parameter values had existed just before the breaker was closed, the resulting main generator MW value would have been _____; and the resulting main generator MVAR (in) value would have been _____.

A. smaller; larger

B. smaller; smaller

C. larger; larger

D. larger; smaller

ANSWER: D.

TOPIC: 191008
KNOWLEDGE: K1.09 [2.8/3.1]
QID: P642 (B44)

When a typical 4,160 volt breaker is racked to the TEST position, control power is _____ the breaker; and the breaker is _____ the load.

A. removed from; isolated from

B. removed from; connected to

C. available to; isolated from

D. available to; connected to

ANSWER: C.

TOPIC: 191008
KNOWLEDGE: K1.09 [2.8/3.1]
QID: P938

Which one of the following functions or capabilities would remain following a loss of control power to a typical 480 VAC bus feeder breaker?

A. Remote breaker control capability

B. Breaker closing spring automatic recharging capability

C. Remote bus voltage indication

D. Remote breaker position indication

ANSWER: C.

TOPIC: 191008
KNOWLEDGE: K1.10 [2.7/3.1]
QID: P42

Which one of the following statements describes the use of high-voltage disconnect switches?

A. Their use should be limited to normal load current interruption.

B. They may be used to isolate transformers in an unloaded network.

C. They trip open like circuit breakers, but must be manually closed.

D. They must be closed with caution when under load because of possible arcing.

ANSWER: B.

TOPIC: 191008
KNOWLEDGE: K1.10 [2.7/3.1]
QID: P243 (B1842)

The function of high-voltage disconnect switches is to provide _____ electrical isolation of equipment during _____ conditions.

A. manual; no-load

B. manual; overload

C. automatic; no-load

D. automatic; overload

ANSWER: A.

TOPIC: 191008
KNOWLEDGE: K1.10 [2.7/3.1]
QID: P844 (B644)

High-voltage disconnect switches are used to...

A. adjust the output voltage range from a main power transformer.

B. protect bus feeder breakers by opening upon bus short-circuit faults.

C. provide equipment isolation under no-load conditions.

D. bypass and isolate an electrical bus while maintaining the downstream buses energized.

ANSWER: C.

TOPIC: 191008
KNOWLEDGE: K1.10 [2.7/3.1]
QID: P943 (B2244)

What is an advantage of using high-voltage disconnect switches instead of breakers to isolate main power transformers?

A. Disconnect switches can be operated either locally or remotely.

B. Disconnect switches provide direct visual indication that the circuit is broken.

C. Disconnect switches are cheaper and provide the same automatic protection as a breaker.

D. Disconnect switches are capable of interrupting a higher current flow with less heating than a breaker.

ANSWER: B.

TOPIC: 191008
KNOWLEDGE: K1.10 [2.7/3.1]
QID: P1043

Which one of the following describes a characteristic of high-voltage disconnect switches?

A. They close automatically requiring no operator action.

B. They should not be used to interrupt a circuit under load.

C. They require a remote means of indication to determine actual position.

D. They should be connected so that they ground the supply bus prior to opening a circuit.

ANSWER: B.

TOPIC: 191008
KNOWLEDGE: K1.10 [2.7/3.1]
QID: P1343

Typical high-voltage disconnect switches are designed to...

A. protect circuits during overcurrent conditions.

B. automatically trip open to protect breakers.

C. isolate equipment electrically during no-load conditions.

D. interrupt circuits under load.

ANSWER: C.

TOPIC: 191008
KNOWLEDGE: K1.10 [2.7/3.1]
QID: P1840 (B1544)

Typical high-voltage transformer disconnect switches are designed to...

A. automatically protect the transformer from overcurrent conditions.

B. automatically trip open prior to transformer output breaker trip.

C. manually isolate the transformer during no-load conditions.

D. manually interrupt the transformer output circuit under any load when grounds are detected.

ANSWER: C.

TOPIC: 191008
KNOWLEDGE: K1.10 [2.7/3.1]
QID: P2742 (B2744)

Refer to the simplified drawing of an electrical distribution system showing 7.2 KV switchgear, step-down transformers, and 480 V motor control centers (MCCs) (see figure below).

The high voltage side of each step-down transformer has a remote-operated disconnect to allow transformer maintenance while keeping the other transformers in service. The control circuit for each disconnect is position-interlocked with the associated MCC feeder breaker.

Which one of the following describes the purpose served by the interlock?

A. Prevent damage to the disconnect.

B. Prevent damage to the transformer.

C. Prevent damage to the feeder breaker.

D. Prevent damage to the 480V MCC.

ANSWER: A.

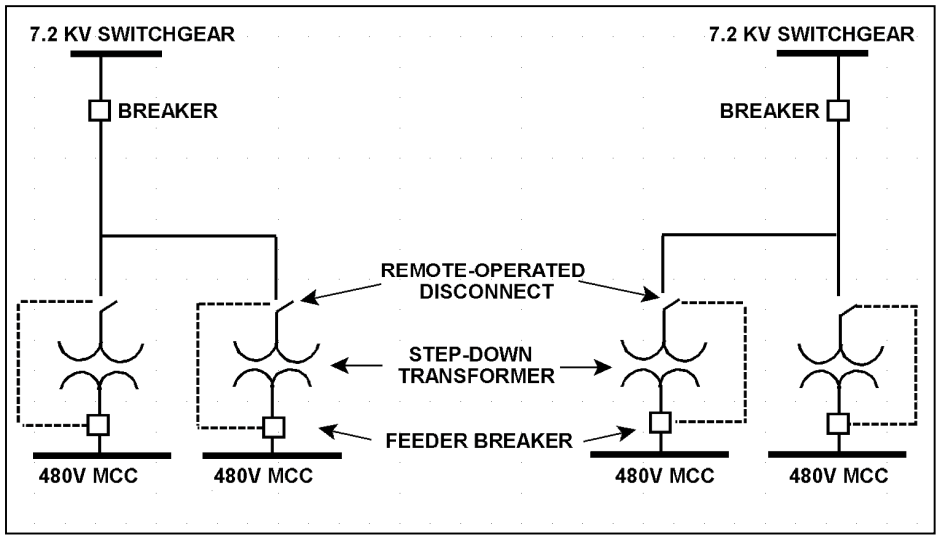

TOPIC: 191008
KNOWLEDGE: K1.10 [2.7/3.1]
QID: P2944 (B2944)

A 480 VAC motor control center supplies a load through a breaker and a manual disconnect switch. Which one of the following sequences will provide the greatest level of personnel safety when deenergizing the load for maintenance and when reenergizing the load after the maintenance?

	DEENERGIZING	REENERGIZING
A.	Open breaker first	Shut breaker first
B.	Open breaker first	Shut disconnect switch first
C.	Open disconnect switch first	Shut breaker first
D.	Open disconnect switch first	Shut disconnect switch first

ANSWER: B.

TOPIC: 191008
KNOWLEDGE: K1.10 [2.7/3.1]
QID: P3744 (B3744)

Refer to the simplified drawing of an electrical distribution system showing 7.2 KV switchgear, step-down transformers, and 480 V motor control centers (MCCs) (see figure below).

The high voltage side of each step-down transformer has a remote-operated disconnect. The control circuit for each disconnect is position-interlocked with the associated MCC feeder breaker. Which one of the following describes the interlock operating scheme that will provide the greatest protection for the disconnect?

A. Permits opening the feeder breaker only if the disconnect is closed.

B. Permits opening the feeder breaker only if the disconnect is open.

C. Permits opening the disconnect only if the feeder breaker is closed.

D. Permits opening the disconnect only if the feeder breaker is open.

ANSWER: D.

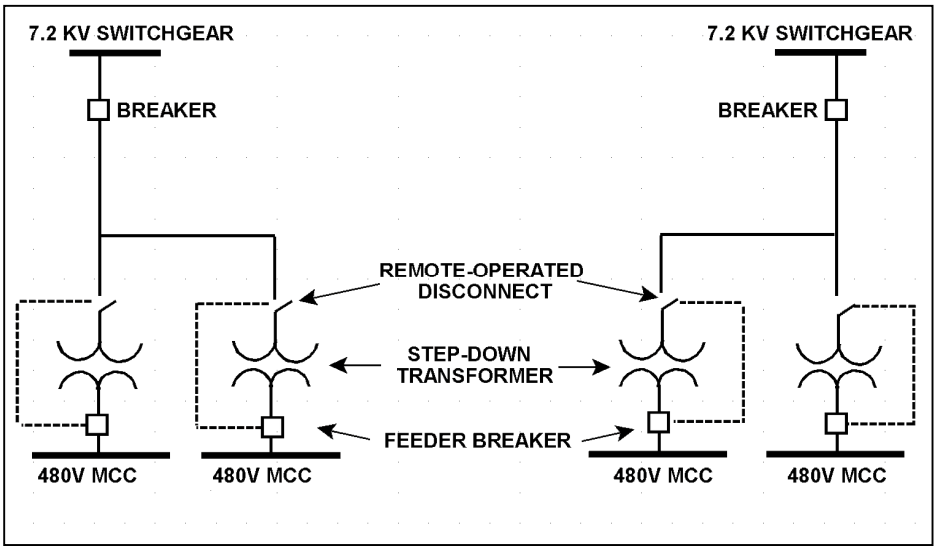

TOPIC: 191008
KNOWLEDGE: K1.11 [3.1/3.3]
QID: P239

The following remote indications are observed for a 480 VAC load center supply breaker. (The breaker is normally open.)

Red indicating light is lit.
Green indicating light is out.
Load center voltage indicates 0 volts.
Breaker incoming voltage indicates 480 volts.

What is the condition of the breaker?

A. Open and racked in

B. Closed and racked in

C. Open and racked to the TEST position

D. Closed and racked to the TEST position

ANSWER: D.

TOPIC: 191008
KNOWLEDGE: K1.11 [3.1/3.3]
QID: P244

The following indications are observed in the control room for a normally-open motor control center (MCC) breaker that directly starts/stops a 480 VAC motor:

Red position indicating light is out.
Green position indicating light is out.
Motor ammeter indicates normal load current.

Assuming one of the indicating lights is burned out, what is the condition of the breaker?

A. Open and racked in

B. Open and racked to the TEST position

C. Closed and racked in

D. Closed and racked to the TEST position

ANSWER: C.

TOPIC: 191008
KNOWLEDGE: K1.11 [3.1/3.3]
QID: P1044

The following indications are observed in the control room for a normally-open motor control center (MCC) breaker that directly starts/stops a 480 VAC motor:

Red position indicating light is lit.
Green position indicating light is out.
Motor load current indicates 0 amps.
MCC voltage indicates 480 volts.

What is the condition of the breaker?

A. Open and racked in

B. Closed and racked in

C. Open and racked to the TEST position

D. Closed and racked to the TEST position

ANSWER: D.

TOPIC: 191008
KNOWLEDGE: K1.11 [3.1/3.3]
QID: P1140

The following indications are observed in the control room for a normally-open breaker that directly starts/stops a 480 VAC motor:

Red position indicating light is lit.
Green position indicating light is out.
Load current indicates 50 amps.
Supply voltage indicates 480 volts.

What is the condition of the breaker?

A. Open and racked to the TEST position

B. Closed and racked to the TEST position

C. Open and racked in

D. Closed and racked in

ANSWER: D.

TOPIC: 191008
KNOWLEDGE: K1.11 [3.1/3.3]
QID: P1438 (B1440)

While remotely investigating the condition of a normally-open breaker that feeds a motor control center (MCC), an operator observes the following indications:

Green breaker position indicating light is out.
Red breaker position indicating light is lit.
MCC voltmeter indicates normal voltage.
MCC ammeter indicates zero amperes.

Based on these indications, the operator should report that the breaker is _____ and racked _____.

A. open; in

B. closed; in

C. open; out

D. closed; out

ANSWER: B.

TOPIC: 191008
KNOWLEDGE: K1.11 [3.1/3.3]
QID: P1838 (B2143)

While remotely investigating the condition of a typical normally-open motor control center (MCC) feeder breaker, an operator observes the following indications:

Green breaker position indicating light is lit.
Red breaker position indicating light is out.
MCC voltmeter indicates zero volts.
MCC ammeter indicates zero amperes.

Based on these indications, the operator can accurately report that the breaker is open and racked to _____ position.

A. the OUT

B. the IN

C. the TEST

D. an unknown

ANSWER: D.

TOPIC: 191008
KNOWLEDGE: K1.11 [3.1/3.3]
QID: P1932 (B2640)

While remotely investigating the condition of a normally-open 480 VAC motor control center (MCC) feeder breaker, an operator observes the following indications:

Green breaker position indicating light is out.
Red breaker position indicating light is lit.
MCC voltmeter indicates 480 VAC.
MCC ammeter indicates zero amperes.

Based on these indications, the operator should report that the feeder breaker is _____ and racked _____.

A. open; in

B. closed; in

C. open; to the TEST position

D. closed; to the TEST position

ANSWER: B.

TOPIC: 191008
KNOWLEDGE: K1.11 [3.1/3.3]
QID: P4120 (B4121)

Given the following indications for an open 4,160 VAC breaker:

All phase overcurrent trip flags are reset.
The control power fuses indicate blown.
The line-side voltmeter indicates 4,160 VAC.
The load-side voltmeter indicates 0 VAC.

Assuming no operator actions were taken since the breaker opened, which one of the following could have caused the breaker to open?

A. A ground fault caused an automatic breaker trip.

B. A loss of control power caused an automatic breaker trip.

C. An operator tripped the breaker manually at the breaker cabinet.

D. An operator tripped the breaker manually from a remote location.

ANSWER: C.

TOPIC: 191008
KNOWLEDGE: K1.11 [3.1/3.3]
QID: P6022 (B6021)

While remotely investigating the condition of a normally-open feeder breaker to a 480 VAC motor control center (MCC), a control room operator observes the following indications:

Green breaker position indicating light is out.
Red breaker position indicating light is lit.
MCC voltmeter indicates 0 VAC.
MCC ammeter indicates zero amperes.

Based on these indications, the operator should report that the feeder breaker is _____ and racked _____.

A. open; in

B. closed; out

C. open; to the TEST position

D. closed; to the TEST position

ANSWER: D.

TOPIC: 191008
KNOWLEDGE: K1.11 [3.1/3.3]
QID: P7222 (B7221)

While remotely investigating the condition of a normally-open 480 VAC motor control center (MCC) feeder breaker, an operator observes the following indications:

Green breaker position indicating light is out.
Red breaker position indicating light is lit.
MCC voltmeter indicates 480 VAC.
MCC ammeter indicates zero amperes.

Based on these indications, the operator should report that the feeder breaker is _____ and racked _____.

A. open; in

B. closed; in

C. open; to an unknown position

D. closed; to an unknown position

ANSWER: B.

TOPIC: 191008
KNOWLEDGE: K1.12 [2.9/2.9]
QID: P1444 (B2240)

Breaker local overcurrent trip flag indicators, when actuated, indicate that...

A. a breaker trip will occur unless current is reduced.

B. a breaker overcurrent condition is responsible for a breaker trip.

C. an overcurrent condition has cleared and the breaker can be closed.

D. the associated breaker has failed to trip open during an overcurrent condition.

ANSWER: B.

TOPIC: 191008
KNOWLEDGE: K1.12 [2.9/2.9]
QID: P3444 (B3440)

Given the following indications for an open 4,160 VAC breaker:

The local OPEN/CLOSED mechanical flag indicates OPEN.
A breaker overcurrent trip flag is actuated on one phase.
The line-side voltmeter indicates 4,160 VAC.
The load-side voltmeter indicates 0 VAC.

Assuming no operator actions were taken since the breaker opened, which one of the following could have caused the breaker to open?

A. A ground fault caused an automatic breaker trip.

B. A loss of control power caused an automatic breaker trip.

C. An operator opened the breaker locally.

D. An operator opened the breaker from a remote location.

ANSWER: A.

TOPIC: 192001
KNOWLEDGE: K1.02 [2.4/2.5]
QID: P545 (B1845)

Delayed neutrons are fission neutrons that...

A. are released at the instant of fission.

B. are responsible for the majority of U-235 fissions.

C. have reached thermal equilibrium with the surrounding medium.

D. are expelled at a lower average kinetic energy than most other fission neutrons.

ANSWER: D.

TOPIC: 192001
KNOWLEDGE: K1.02 [2.4/2.5]
QID: P845 (B1945)

Delayed neutrons are neutrons that...

A. have reached thermal equilibrium with the surrounding medium.

B. are expelled within 1.0×10^{-14} seconds of the fission event.

C. are produced from the radioactive decay of certain fission fragments.

D. are responsible for the majority of U-235 fissions.

ANSWER: C.

TOPIC: 192001
KNOWLEDGE: K1.02 [2.4/2.5]
QID: P1145 (B1545)

Which one of the following is a characteristic of a prompt neutron?

A. Expelled with an average kinetic energy of 0.5 MeV.

B. Usually emitted by the excited nucleus of a fission product.

C. Accounts for more than 99 percent of fission neutrons.

D. Released an average of 13 seconds after the fission event.

ANSWER: C.

TOPIC: 192001
KNOWLEDGE: K1.02 [2.4/2.5]
QID: P1445 (B1345)

A neutron that is expelled 1.0×10^{-2} seconds after the associated fission event is a _____ neutron.

A. thermal

B. delayed

C. prompt

D. capture

ANSWER: B.

TOPIC: 192001
KNOWLEDGE: K1.02 [2.4/2.5]
QID: P1545

A neutron that is expelled 1.0 x 10^{-6} seconds after the associated fission event is a _____ neutron.

A. thermal

B. prompt

C. delayed

D. capture

ANSWER: C.

TOPIC: 192001
KNOWLEDGE: K1.02 [2.4/2.5]
QID: P1945 (B1146)

Which one of the following types of neutrons has an average neutron generation lifetime of 12.5 seconds?

A. Prompt

B. Delayed

C. Fast

D. Thermal

ANSWER: B.

TOPIC: 192001
KNOWLEDGE: K1.02 [2.4/2.5]
QID: P2045 (B2046)

In a comparison between a delayed neutron and a prompt neutron produced from the same fission event, the prompt neutron is more likely to... (Assume that both neutrons remain in the core.)

A. require a greater number of collisions to become a thermal neutron.

B. be captured by U-238 at a resonance energy peak between 1 eV and 1000 eV.

C. be expelled with a lower kinetic energy.

D. cause thermal fission of a U-235 nucleus.

ANSWER: A.

TOPIC: 192001
KNOWLEDGE: K1.02 [2.4/2.5]
QID: P2145 (B2145)

In a comparison between a delayed neutron and a prompt neutron produced from the same fission event, the prompt neutron is more likely to... (Assume that both neutrons remain in the core.)

A. cause fast fission of a U-238 nucleus.

B. be captured by a U-238 nucleus at a resonance energy between 1 eV and 1000 eV.

C. be captured by a Xe-135 nucleus.

D. cause thermal fission of a U-235 nucleus.

ANSWER: A.

TOPIC: 192001
KNOWLEDGE: K1.02 [2.4/2.5]
QID: P2345 (B2345)

A neutron that is released 1.0 x 10^{-10} seconds after the associated fission event is classified as a _____ fission neutron.

A. delayed

B. prompt

C. thermal

D. spontaneous

ANSWER: A.

TOPIC: 192001
KNOWLEDGE: K1.02 [2.4/2.5]
QID: P2445 (B3345)

In a comparison between a prompt neutron and a delayed neutron produced from the same fission event, the delayed neutron requires _____ collisions in the moderator to become thermal; and is _____ likely to cause fission of a U-238 nucleus. (Ignore the effects of neutron leakage.)

A. more; more

B. more; less

C. fewer; more

D. fewer; less

ANSWER: D.

TOPIC: 192001
KNOWLEDGE: K1.02 [2.4/2.5]
QID: P2545 (B2545)

In a comparison between a delayed neutron and a prompt neutron produced from the same fission event, the prompt neutron is more likely to...

A. be captured by a Xe-135 nucleus.

B. cause thermal fission of a U-235 nucleus.

C. leak out of the core while slowing down.

D. be captured by a U-238 nucleus at a resonance energy.

ANSWER: C.

TOPIC: 192001
KNOWLEDGE: K1.02 [2.4/2.5]
QID: P2645 (B2645)

In a comparison between a delayed neutron and a prompt neutron produced from the same fission event, the delayed neutron is more likely to...

A. leak out of the core.

B. cause fission of a U-238 nucleus.

C. become a thermal neutron.

D. cause fission of a Pu-240 nucleus.

ANSWER: C.

TOPIC: 192001
KNOWLEDGE: K1.02 [2.4/2.5]
QID: P2845 (B3145)

During a brief time interval in a typical reactor operating steady-state near the beginning of a fuel cycle, 1.0×10^3 delayed neutrons were emitted.

Approximately how many prompt neutrons were emitted during this same time interval?

A. 1.5×10^5

B. 6.5×10^6

C. 1.5×10^7

D. 6.5×10^8

ANSWER: A.

TOPIC: 192001
KNOWLEDGE: K1.02 [2.4/2.5]
QID: P2945 (B2945)

Which one of the following types of neutrons in a reactor is more likely to cause fission of a U-238 nucleus in the reactor fuel? (Assume that each type of neutron remains in the reactor core until it interacts with a U-238 nucleus.)

A. Thermal neutron

B. Prompt fission neutron beginning to slow down

C. Delayed fission neutron beginning to slow down

D. Fission neutron at a U-238 resonance energy

ANSWER: B.

TOPIC: 192001
KNOWLEDGE: K1.02 [2.4/2.5]
QID: P3545 (B3545)

During a brief time interval in a typical reactor operating steady-state at the beginning of a fuel cycle, 1.0×10^5 delayed neutrons were emitted.

Approximately how many prompt neutrons were emitted in the reactor during this same time interval?

A. 1.5×10^5

B. 6.5×10^6

C. 1.5×10^7

D. 6.5×10^8

ANSWER: C.

TOPIC: 192001
KNOWLEDGE: K1.02 [2.4/2.5]
QID: P4123 (B4123)

A neutron that appears 1.0×10^{-16} seconds after the associated fission event is classified as a _____ fission neutron.

A. delayed

B. prompt

C. thermal

D. spontaneous

ANSWER: B.

TOPIC: 192001
KNOWLEDGE: K1.02 [2.4/2.5]
QID: P4923 (B4923)

During a brief time interval in a typical reactor operating steady-state near the beginning of a fuel cycle, 4.25×10^5 delayed neutrons were produced.

Approximately how many prompt neutrons were produced in the reactor during this same time interval?

A. 1.5×10^6

B. 6.5×10^6

C. 1.5×10^7

D. 6.5×10^7

ANSWER: D.

TOPIC: 192001
KNOWLEDGE: K1.02 [2.4/2.5]
QID: P5023 (B2245)

In a comparison between a delayed neutron and a prompt neutron produced from the same fission event, the delayed neutron is more likely to... (Assume that each neutron remains in the core unless otherwise stated.)

A. cause fission of a U-238 nucleus.

B. travel to an adjacent fuel assembly.

C. be absorbed in a B-10 nucleus.

D. leak out of the core.

ANSWER: C.

TOPIC: 192001
KNOWLEDGE: K1.02 [2.4/2.5]
QID: P7123 (B7123)

Which one of the following is the process that produces the majority of delayed neutrons in an operating nuclear plant reactor?

A. A thermal neutron is absorbed by a fuel nucleus. After a period of time, the nucleus fissions and releases a delayed neutron.

B. A thermal neutron is absorbed by a fuel nucleus. The fuel nucleus fissions. During the decay process of the fission products, a delayed neutron is emitted.

C. A fast neutron is absorbed by a fuel nucleus. After a period of time, the nucleus fissions and releases a delayed neutron.

D. A fast neutron is absorbed by a fuel nucleus. The fuel nucleus fissions. During the decay process of the fission products, a delayed neutron is emitted.

ANSWER: B.

TOPIC: 192001
KNOWLEDGE: K1.02 [2.4/2.5]
QID: P7523 (B7523)

During a brief time interval in a typical reactor operating steady-state near the beginning of a fuel cycle, 4.25×10^{10} prompt neutrons were produced.

Approximately how many delayed neutrons were produced in the reactor during this same time interval?

A. 2.8×10^{8}

B. 6.5×10^{8}

C. 2.8×10^{9}

D. 6.5×10^{9}

ANSWER: A.

TOPIC: 192001
KNOWLEDGE: K1.02 [2.4/2.5]
QID: P7677 (B7677)

Which one of the following is the process that produces the majority of prompt neutrons in an operating nuclear plant reactor?

A. A thermal neutron is absorbed by a fuel nucleus. Almost immediately, the nucleus fissions and emits one or more prompt neutrons.

B. A thermal neutron is absorbed by a fuel nucleus. Almost immediately, the fuel nucleus fissions and produces fission products. During the decay of the fission products, one or more prompt neutrons are emitted.

C. A fast neutron is absorbed by a fuel nucleus. Almost immediately, the nucleus fissions and emits one or more prompt neutrons.

D. A fast neutron is absorbed by a fuel nucleus. Almost immediately, the fuel nucleus fissions and produces fission products. During the decay of the fission products, one or more prompt neutrons are emitted.

ANSWER: A.

TOPIC: 192002
KNOWLEDGE: K1.07 [3.1/3.1]
QID: P44 (B186)

A reactor is initially subcritical with the effective multiplication factor (K_{eff}) equal to 0.998. After a brief withdrawal of control rods, K_{eff} equals 1.002. The reactor is currently...

A. prompt critical.

B. supercritical.

C. exactly critical.

D. subcritical.

ANSWER: B.

TOPIC: 192002
KNOWLEDGE: K1.07 [3.1/3.1]
QID: P445 (B247)

Which one of the following conditions describes a reactor that is exactly critical?

A. $K_{eff} = 0$; $\Delta K/K = 0$

B. $K_{eff} = 0$; $\Delta K/K = 1$

C. $K_{eff} = 1$; $\Delta K/K = 0$

D. $K_{eff} = 1$; $\Delta K/K = 1$

ANSWER: C.

TOPIC: 192002
KNOWLEDGE: K1.08 [2.6/2.6]
QID: P45

The ratio of the number of neutrons in one generation to the number of neutrons in the previous generation is the...

A. effective multiplication factor.

B. fast fission factor.

C. nonleakage factor.

D. reproduction factor.

ANSWER: A.

TOPIC: 192002
KNOWLEDGE: K1.08 [2.6/2.6]
QID: P1346 (B1447)

The effective multiplication factor (K_{eff}) can be determined by dividing the number of neutrons in the third generation by the number of neutrons in the _____ generation.

A. first

B. second

C. third

D. fourth

ANSWER: B.

TOPIC: 192002
KNOWLEDGE: K1.08 [2.6/2.6]
QID: P1846 (B847)

The effective multiplication factor (K_{eff}) describes the ratio of the number of fission neutrons at the end of one generation to the number of fission neutrons at the _____ of the _____ generation.

A. beginning; next

B. beginning; previous

C. end; next

D. end; previous

ANSWER: D.

TOPIC: 192002
KNOWLEDGE: K1.08 [2.6/2.6]
QID: P2647 (B2647)

A thermal neutron is about to interact with a U-238 nucleus in an operating reactor. Which one of the following describes the most likely interaction and its effect on K_{eff}?

A. The neutron will be scattered, thereby leaving K_{eff} unchanged.

B. The neutron will be absorbed and the nucleus will fission, thereby decreasing K_{eff}.

C. The neutron will be absorbed and the nucleus will fission, thereby increasing K_{eff}.

D. The neutron will be absorbed and the nucleus will decay to Pu-239, thereby increasing K_{eff}.

ANSWER: A.

TOPIC: 192002
KNOWLEDGE: K1.08 [2.6/2.6]
QID: P3046 (B3147)

A nuclear power plant is currently operating at steady-state 80 percent power near the end of its fuel cycle. During the next 3 days of steady-state power operation, no operator action is taken.

How will core K_{eff} be affected during the 3-day period?

A. Core K_{eff} will gradually increase during the entire period.

B. Core K_{eff} will gradually decrease during the entire period.

C. Core K_{eff} will tend to increase, but inherent reactivity feedback will maintain K_{eff} at 1.0.

D. Core K_{eff} will tend to decrease, but inherent reactivity feedback will maintain K_{eff} at 1.0.

ANSWER: D.

TOPIC: 192002
KNOWLEDGE: K1.08 [2.6/2.6]
QID: P6424 (B6424)

A 1.5 MeV neutron is about to interact with a U-238 nucleus in an operating reactor. Which one of the following describes the most likely interaction and its effect on K_{eff}?

A. The neutron will be scattered, thereby leaving K_{eff} unchanged.

B. The neutron will be absorbed and the nucleus will fission, thereby decreasing K_{eff}.

C. The neutron will be absorbed and the nucleus will fission, thereby increasing K_{eff}.

D. The neutron will be absorbed and the nucleus will decay to Pu-239, thereby increasing K_{eff}.

ANSWER: A.

TOPIC: 192002
KNOWLEDGE: K1.09 [2.5/2.7]
QID: P546

During reactor refueling, burnable poisons are often installed in the core to help control K_{excess}. Why are more burnable poisons installed for the first fuel cycle than for subsequent fuel cycles?

A. Control rod worth is lower at the beginning of subsequent fuel cycles.

B. More fuel reactivity is present at the beginning of subsequent fuel cycles.

C. More fission product poisons are present at the beginning of subsequent fuel cycles.

D. Reactor coolant boron concentration is higher at the beginning of subsequent fuel cycles.

ANSWER: C.

TOPIC: 192002
KNOWLEDGE: K1.09 [2.5/2.7]
QID: P646 (B1848)

Which one of the following defines K-excess?

A. $K_{eff} - 1$

B. $K_{eff} + 1$

C. $(K_{eff} - 1)/K_{eff}$

D. $(1-K_{eff})/K_{eff}$

ANSWER: A.

TOPIC: 192002
KNOWLEDGE: K1.09 [2.5/2.7]
QID: P946

The following are combinations of critical conditions that exist for the same reactor operating at the point of adding heat at different times in core life. Which one of the following combinations indicates the most amount of excess reactivity present in the core?

	Control Rod Position	RCS Boron Concentration
A.	25% inserted	500 ppm
B.	50% inserted	500 ppm
C.	25% inserted	1,000 ppm
D.	50% inserted	1,000 ppm

ANSWER: D.

TOPIC: 192002
KNOWLEDGE: K1.09 [2.5/2.7]
QID: P1147

The following are combinations of critical conditions that exist for the same reactor operating at the point of adding heat at different times in core life. Which one of the following combinations indicates the least amount of excess reactivity present in the core?

	Control Rod Position	RCS Boron Concentration
A.	25% inserted	500 ppm
B.	25% inserted	1,000 ppm
C.	50% inserted	500 ppm
D.	50% inserted	1,000 ppm

ANSWER: A.

TOPIC: 192002
KNOWLEDGE: K1.09 [2.5/2.7]
QID: P1246 (B2048)

Which one of the following is a reason for installing excess reactivity (K_{excess}) in a reactor?

A. To compensate for the conversion of U-238 to Pu-239 over core life.

B. To compensate for burnout of Xe-135 and Sm-149 during power changes.

C. To ensure the fuel temperature coefficient remains negative throughout core life.

D. To compensate for the negative reactivity added by the power coefficient during a power increase.

ANSWER: D.

TOPIC: 192002
KNOWLEDGE: K1.09 [2.5/2.7]
QID: P2847 (B2747)

A reactor is operating at full power at the beginning of a fuel cycle. A neutron has just been absorbed by a U-238 nucleus at a resonance energy of 6.7 electron volts.

Which one of the following describes the most likely reaction for the newly formed U-239 nucleus and the effect of this reaction on K_{excess}?

A. Decays over several days to Pu-239, which increases K_{excess}.

B. Decays over several days to Pu-240, which increases K_{excess}.

C. Immediately undergoes fast fission, which decreases K_{excess}.

D. Immediately undergoes thermal fission, which decreases K_{excess}.

ANSWER: A.

TOPIC: 192002
KNOWLEDGE: K1.09 [2.5/2.7]
QID: P3547 (B3547)

Which one of the following is a benefit of installing excess reactivity (K_{excess}) in a reactor?

A. Ensures that sufficient control rod negative reactivity is available to shut down the reactor.

B. Ensures that the reactor can be made critical during a peak xenon condition after a reactor trip.

C. Ensures that positive reactivity additions result in controllable reactor power responses.

D. Ensures that the U-235 fuel enrichment is the same at the beginning and the end of a fuel cycle.

ANSWER: B.

TOPIC: 192002
KNOWLEDGE: K1.10 [3.2/3.6]
QID: P127

Shutdown margin can be defined as the amount of reactivity...

A. inserted by burnable poisons at beginning of a fuel cycle.

B. added by boron in the reactor coolant system.

C. by which the reactor is subcritical.

D. that would be inserted by shutdown bank rods.

ANSWER: C.

TOPIC: 192002
KNOWLEDGE: K1.10 [3.2/3.6]
QID: P245 (B248)

When determining the available shutdown margin for an operating reactor, how many control rods are assumed to remain fully withdrawn?

A. A single control rod of the highest reactivity worth.

B. A symmetrical pair of control rods of the highest reactivity worth.

C. A single control rod of average reactivity worth.

D. A symmetrical pair of control rods of average reactivity worth.

ANSWER: A.

TOPIC: 192002
KNOWLEDGE: K1.10 [3.2/3.6]
QID: P345

With a reactor initially operating at steady-state 85 percent power with manual rod control, the operator borates the reactor coolant system an additional 10 ppm. During the boration, the available shutdown margin will...

A. decrease and stabilize at a lower value.

B. decrease, then increase to the original value as coolant temperature changes.

C. increase and stabilize at a higher value.

D. increase, then decrease to the original value as coolant temperature changes.

ANSWER: C.

TOPIC: 192002
KNOWLEDGE: K1.10 [3.2/3.6]
QID: P746

With a reactor initially operating at steady-state 75 percent power with manual rod control, the operator dilutes the reactor coolant system boron concentration by 5 ppm. During the dilution, the available shutdown margin will...

A. increase and stabilize at a higher value.

B. increase, then decrease to the original value as coolant temperature changes.

C. decrease and stabilize at a lower value.

D. decrease, then increase to the original value as coolant temperature changes.

ANSWER: C.

TOPIC: 192002
KNOWLEDGE: K1.10 [3.2/3.6]
QID: P1747

A nuclear power plant is operating with the following initial conditions:

- Reactor power is 50 percent.
- Rod control is in manual.
- Reactor coolant system (RCS) boron concentration is 600 ppm.

Disregarding the effects of fission product poisons, which one of the following will result in a decrease in the available shutdown margin once the plant stabilizes?

A. Reactor power is reduced to 45 percent with final RCS boron concentration at 620 ppm.

B. Reactor power is increased to 55 percent with final RCS boron concentration at 580 ppm.

C. Control rods are withdrawn 3 inches with no change in steady-state reactor power or RCS boron concentration.

D. Control rods are inserted 3 inches with no change in steady-state reactor power or RCS boron concentration.

ANSWER: B.

TOPIC: 192002
KNOWLEDGE: K1.10 [3.2/3.6]
QID: P2347 (B2348)

Which one of the following changes will decrease the available shutdown margin in a reactor? (Assume no operator actions.)

A. Depletion of fuel during reactor operation.

B. Depletion of burnable poisons during reactor operation.

C. Buildup of samarium-149 following a reactor power transient.

D. Buildup of xenon-135 following a reactor power transient.

ANSWER: B.

TOPIC: 192002
KNOWLEDGE: K1.10 [3.2/3.6]
QID: P2546

A reactor is operating at steady-state 100 percent power with manual rod control about three months from the end of a fuel cycle. During the next two weeks of operation at 100 percent power, the available shutdown margin will... (Assume no operator actions are taken.)

A. continuously increase.

B. continuously decrease.

C. initially increase, and then decrease.

D. initially decrease, and then increase.

ANSWER: A.

TOPIC: 192002
KNOWLEDGE: K1.11 [2.9/3.0]
QID: P46

Reactivity is defined as the fractional change in...

A. reactor power per second.

B. neutron population per second.

C. reactor period from criticality.

D. the effective multiplication factor from criticality.

ANSWER: D.

TOPIC: 192002
KNOWLEDGE: K1.11 [2.9/3.0]
QID: P846

Which term is described by the following?

"The fractional change of the effective multiplication factor from criticality."

A. 1/M

B. K_{eff}

C. Reactor period

D. Reactivity

ANSWER: D.

TOPIC: 192002
KNOWLEDGE: K1.12 [2.4/2.5]
QID: P130

With K_{eff} equal to 0.985, how much reactivity must be added to make the reactor critical? (Round answer to the nearest 0.01 %ΔK/K.)

A. 1.48 %ΔK/K

B. 1.50 %ΔK/K

C. 1.52 %ΔK/K

D. 1.54 %ΔK/K

ANSWER: C.

TOPIC: 192002
KNOWLEDGE: K1.12 [2.4/2.5]
QID: P446 (B1548)

With K_{eff} equal to 0.987, how much reactivity must be added to make the reactor critical? (Round answer to the nearest 0.01 %ΔK/K.)

A. 1.01 %ΔK/K

B. 1.03 %ΔK/K

C. 1.30 %ΔK/K

D. 1.32 %ΔK/K

ANSWER: D.

TOPIC: 192002
KNOWLEDGE: K1.12 [2.4/2.5]
QID: P1946 (B648)

In a subcritical reactor, K_{eff} was increased from 0.85 to 0.95 by rod withdrawal. Which one of the following is the approximate amount of reactivity that was added to the core?

A. 0.099 ΔK/K

B. 0.124 ΔK/K

C. 0.176 ΔK/K

D. 0.229 ΔK/K

ANSWER: B.

TOPIC: 192002
KNOWLEDGE: K1.12 [2.4/2.5]
QID: P2146 (B2848)

With K_{eff} equal to 0.982, how much positive reactivity is required to make the reactor critical? (Round answer to the nearest 0.01 %ΔK/K.)

A. 1.72 %ΔK/K

B. 1.77 %ΔK/K

C. 1.80 %ΔK/K

D. 1.83 %ΔK/K

ANSWER: D.

TOPIC: 192002
KNOWLEDGE: K1.12 [2.4/2.5]
QID: P2447 (B1947)

With K_{eff} equal to 0.985, how much positive reactivity is required to make the reactor critical? (Round answer to the nearest 0.01 %ΔK/K.)

A. 1.49 %ΔK/K

B. 1.50 %ΔK/K

C. 1.52 %ΔK/K

D. 1.55 %ΔK/K

ANSWER: C.

TOPIC: 192002
KNOWLEDGE: K1.12 [2.4/2.5]
QID: P3347 (B748)

With K_{eff} equal to 0.983, how much positive reactivity must be added to make the reactor critical? (Round answer to the nearest 0.01 %ΔK/K.)

A. 1.70 %ΔK/K

B. 1.73 %ΔK/K

C. 3.40 %ΔK/K

D. 3.43 %ΔK/K

ANSWER: B.

TOPIC: 192002
KNOWLEDGE: K1.12 [2.4/2.5]
QID: P7647 (B7647)

A reactor was initially shutdown at a stable power level of 2.0×10^{-5} percent. After a small positive reactivity addition, the current stable power level is 3.0×10^{-5} percent. If the initial K_{eff} was 0.982, what is the current K_{eff}?

A. 0.988

B. 0.992

C. 0.996

D. Cannot be determined without additional information.

ANSWER: A.

TOPIC: 192002
KNOWLEDGE: K1.13 [3.5/3.7]
QID: P246

A reactor near the end of a fuel cycle has been shut down from 100 percent power and cooled down to 140°F over three days. During the cooldown, boron concentration was increased by 100 ppm. Given the following absolute values of reactivities added during the shutdown and cooldown, assign a (+) or (−) as appropriate and choose the current value of core reactivity.

Control rods = ( ) 6.918 %ΔK/K
Xenon = ( ) 2.675 %ΔK/K
Power defect = ( ) 1.575 %ΔK/K
Boron = ( ) 1.040 %ΔK/K
Cooldown = ( ) 0.500 %ΔK/K

A. -8.558 %ΔK/K

B. -6.358 %ΔK/K

C. -3.208 %ΔK/K

D. -1.128 %ΔK/K

ANSWER: C.

TOPIC: 192002
KNOWLEDGE: K1.13 [3.5/3.7]
QID: P346

A reactor was operating at steady-state 100 percent power with all control rods fully withdrawn and average reactor coolant temperature (T_{ave}) at 588°F when a reactor trip occurred.

After the trip, T_{ave} stabilized at the no-load temperature of 557°F and all control rods were verified to be fully inserted.

Given the following information, select the current value of core reactivity. (Assume no operator actions and disregard any reactivity effects of xenon.)

Power coefficient	=	-0.015 %ΔK/K/percent
Control rod worth	=	-6.918 %ΔK/K
Moderator temperature coefficient	=	-0.0012 %ΔK/K/°F

A. -5.381 %ΔK/K

B. -5.418 %ΔK/K

C. -8.383 %ΔK/K

D. -8.418 %ΔK/K

ANSWER: B.

TOPIC: 192002
KNOWLEDGE: K1.13 [3.5/3.7]
QID: P447

A reactor is operating at steady-state 90 percent power with all control rods fully withdrawn and average reactor coolant temperature (T_{ave}) at 580°F. A reactor trip occurs, after which T_{ave} stabilizes at the no-load temperature of 550°F and all control rods are verified to be fully inserted.

Given the following information, calculate the current value of core reactivity. (Assume no operator actions and disregard any reactivity effects of changes in xenon-135.)

Power coefficient	= -0.01 %ΔK/K/percent
Control rod worth	= -6.918 %ΔK/K
Moderator temperature coefficient	= -0.01 %ΔK/K/°F

A. -5.718 %ΔK/K

B. -6.018 %ΔK/K

C. -7.518 %ΔK/K

D. -7.818 %ΔK/K

ANSWER: B.

TOPIC: 192002
KNOWLEDGE: K1.13 [3.5/3.7]
QID: P647

A reactor was operating at steady-state 100 percent power near the end of a fuel cycle when a reactor trip occurred. Immediately after the trip, shutdown margin was determined to be -5.883 %ΔK/K. Over the next 72 hours, the reactor coolant system was cooled down and reactor coolant boron concentration was increased. The reactivities affected by the change in plant conditions are as follows:

Reactivity		Change (+) or (−)
Xenon	=	( ) 2.675 %ΔK/K
Moderator temperature	=	( ) 0.5 %ΔK/K
Boron	=	( ) 1.04 %ΔK/K

What is the value of core reactivity 72 hours after the trip?

A. -1.668 %ΔK/K

B. -3.748 %ΔK/K

C. -7.018 %ΔK/K

D. -9.098 %ΔK/K

ANSWER: B.

TOPIC: 192002
KNOWLEDGE: K1.13 [3.5/3.7]
QID: P747

A reactor near the end of a fuel cycle has been shut down from 100 percent power and cooled down to 140°F over three days. During the cooldown, reactor coolant boron concentration was increased by 100 ppm.

Given the following absolute values of reactivities added during the shutdown and cooldown, assign a (+) or (−) as appropriate and choose the current value of core reactivity.

Xenon	=	( ) 2.5 %ΔK/K
Moderator temperature	=	( ) 0.5 %ΔK/K
Power defect	=	( ) 1.5 %ΔK/K
Control rods	=	( ) 7.0 %ΔK/K
Boron	=	( ) 1.0 %ΔK/K

A. -8.5 %ΔK/K

B. -6.5 %ΔK/K

C. -3.5 %ΔK/K

D. -1.5 %ΔK/K

ANSWER: C.

TOPIC: 192002
KNOWLEDGE: K1.13 [3.5/3.7]
QID: P1047

A reactor near the end of a fuel cycle has been shut down from 100 percent power and cooled down to 140°F over three days. During the cooldown, reactor coolant boron concentration was increased by 100 ppm.

Given the following absolute values of reactivities added during the shutdown and cooldown, assign a (+) or (−) as appropriate and choose the current value of core reactivity.

Moderator temperature	=	( ) 0.50 %ΔK/K
Control rods	=	( ) 6.50 %ΔK/K
Boron	=	( ) 1.50 %ΔK/K
Power defect	=	( ) 1.75 %ΔK/K
Xenon	=	( ) 2.75 %ΔK/K

A. -0.0 %ΔK/K

B. -3.0 %ΔK/K

C. -3.5 %ΔK/K

D. -8.5 %ΔK/K

ANSWER: B.

TOPIC: 192002
KNOWLEDGE: K1.13 [3.5/3.7]
QID: P1446

A reactor near the middle of a fuel cycle has been shut down from 100 percent power and cooled down to 340°F over three days. During the cooldown, reactor coolant boron concentration was increased by 200 ppm.

Given the following absolute values of reactivities added during the shutdown and cooldown, assign a (+) or (−) as appropriate and choose the current value of core reactivity.

Xenon	=	( ) 3.0 %ΔK/K
Boron	=	( ) 3.5 %ΔK/K
Power defect	=	( ) 4.0 %ΔK/K
Control rods	=	( ) 7.0 %ΔK/K
Moderator temperature	=	( ) 2.0 %ΔK/K

A. -1.5 %ΔK/K

B. -2.5 %ΔK/K

C. -7.5 %ΔK/K

D. -9.5 %ΔK/K

ANSWER: A.

TOPIC: 192002
KNOWLEDGE: K1.13 [3.5/3.7]
QID: P1647

A reactor near the middle of a fuel cycle was operating at 100 percent power for two months when a reactor trip occurred. During the 14 hours since the trip, the reactor has been cooled to 340°F and reactor coolant boron concentration has been increased by 200 ppm.

Given the following absolute values of reactivities added during the shutdown and cooldown, assign a (+) or (−) as appropriate and choose the current value of core reactivity.

Xenon	=	( ) 2.0 %ΔK/K
Boron	=	( ) 2.5 %ΔK/K
Power defect	=	( ) 4.0 %ΔK/K
Control rods	=	( ) 7.0 %ΔK/K
Moderator temperature	=	( ) 2.0 %ΔK/K

A. -1.5 %ΔK/K

B. -3.5 %ΔK/K

C. -5.5 %ΔK/K

D. -7.5 %ΔK/K

ANSWER: C.

TOPIC: 192002
KNOWLEDGE: K1.13 [3.5/3.7]
QID: P5224

A reactor near the middle of a fuel cycle was initially operating at steady-state 100 percent power when it was shut down and cooled down to 200°F over a three-day period. During the cooldown, reactor coolant boron concentration was increased by 80 ppm.

Given the following absolute values of reactivities added during the shutdown and cooldown, assign a (+) or (−) as appropriate and choose the current value of core reactivity.

Control rods	=	( ) 6.75 %ΔK/K
Xenon	=	( ) 2.50 %ΔK/K
Power defect	=	( ) 2.00 %ΔK/K
Boron	=	( ) 1.25 %ΔK/K
Moderator temperature	=	( ) 0.50 %ΔK/K

A. -0.5 %ΔK/K

B. -3.0 %ΔK/K

C. -7.0 %ΔK/K

D. -8.0 %ΔK/K

ANSWER: B.

TOPIC: 192002
KNOWLEDGE: K1.14 [3.8/3.9]
QID: P124

Which one of the following plant parameter changes will increase the shutdown margin for a shutdown reactor near the end of a fuel cycle?

A. Reactor coolant boron concentration is decreased by 100 ppm.

B. One control rod is fully withdrawn for a test.

C. Xenon has decayed for 72 hours following shutdown.

D. The reactor coolant system is allowed to heat up 30°F.

ANSWER: D.

TOPIC: 192002
KNOWLEDGE: K1.14 [3.8/3.9]
QID: P547

A nuclear power plant is operating at steady-state 70 percent power with manual rod control. Which one of the following events will <u>increase</u> the shutdown margin? (Assume that <u>no</u> unspecified operator actions occur and the reactor does <u>not</u> trip.)

A. Reactor coolant boron concentration is decreased by 10 ppm.

B. A control rod in a shutdown bank (safety group) drops.

C. Power is decreased to 50 percent using boration.

D. The plant experiences a 3 percent load rejection.

ANSWER: C.

TOPIC: 192002
KNOWLEDGE: K1.14 [3.8/3.9]
QID: P2046

A reactor is shutdown with the reactor vessel head removed for refueling. The core is covered by 23 feet of refueling water at 100°F with a boron concentration of 2,000 ppm.

Which one of the following will increase core K_{eff}?

A. An unrodded spent fuel assembly is removed from the core.

B. Refueling water temperature is increased to 105°F.

C. A new neutron source is installed in the core.

D. Excore nuclear instrumentation is repositioned to increase source range count rate.

ANSWER: B.

TOPIC: 192002
KNOWLEDGE: K1.14 [3.8/3.9]
QID: P2247

A reactor is operating at 80 percent power when the operator adds 10 gallons of boric acid to the reactor coolant system (RCS). Over the next several minutes, the operator adjusts control rod position as necessary to maintain a constant reactor coolant average temperature.

When the plant stabilizes, the shutdown margin will be _____; and axial power distribution will have shifted toward the _____ of the core.

A. the same; top

B. the same; bottom

C. larger; top

D. larger; bottom

ANSWER: C.

TOPIC: 192002
KNOWLEDGE: K1.14 [3.8/3.9]
QID: P2547

A nuclear power plant malfunction requires a rapid reactor power decrease from 100 percent to 90 percent. The crew performs the downpower transient using control rod insertion when necessary. Reactor coolant boron concentration is not changed.

If the shutdown margin at 100 percent power was 3.5 %ΔK/K, which one of the following describes the shutdown margin at the lower power level? (Ignore any changes in core fission product reactivity.)

A. Less than 3.5 %ΔK/K due only to the power defect.

B. Greater than 3.5 %ΔK/K due only to the insertion of control rods.

C. Less than 3.5 %ΔK/K due to the combined effects of control rod insertion and power defect.

D. Equal to 3.5 %ΔK/K regardless of the reactivity effects of control rod insertion and power defect.

ANSWER: D.

TOPIC: 192002
KNOWLEDGE: K1.14 [3.8/3.9]
QID: P2746

A reactor is shutdown with the reactor vessel head removed for refueling. The core is covered by 23 feet of refueling water at 105°F with a boron concentration of 2,200 ppm.

Which one of the following will increase core K_{eff}?

A. A new neutron source is installed in the core.

B. Refueling water temperature is decreased to 100°F.

C. A spent fuel assembly is replaced with a new fuel assembly.

D. Excore nuclear instrumentation is repositioned to increase source range count rate.

ANSWER: C.

TOPIC: 192002
KNOWLEDGE: K1.14 [3.8/3.9]
QID: P2747

Reactors A and B are identical except that reactor A is operating at steady-state 80 percent power while reactor B is operating at steady-state 100 percent power. Initial control rod positions are the same for each reactor.

How will the shutdown margins (SDM) compare for the two reactors following a reactor trip? (Assume no post-trip operator actions are taken that would affect SDM.)

A. Reactor A will have the greater SDM.

B. Reactor B will have the greater SDM.

C. When sufficient time has passed to allow both cores to become xenon-free, the SDMs will be equal.

D. Within a few minutes after the trips, when all parameters have returned to normal post-trip conditions, the SDMs will be equal.

ANSWER: A.

TOPIC: 192002
KNOWLEDGE: K1.14 [3.8/3.9]
QID: P2947

A reactor is operating at steady-state 50 percent power. A plant test requires a 4°F decrease in reactor coolant system (RCS) average temperature (T-avg). The operator accomplishes this temperature decrease by adjusting RCS boron concentration. No other operator actions are taken.

If the initial shutdown margin was 3.0 %ΔK/K, which one of the following describes the shutdown margin at the lower RCS T-avg with the reactor still at steady-state 50 percent power?

A. Less than 3.0 %ΔK/K, because RCS T-avg is lower.

B. More than 3.0 %ΔK/K, because RCS boron concentration is higher.

C. Equal to 3.0 %ΔK/K, because the reactivity change caused by the change in RCS T-avg offsets the reactivity change caused by the change in RCS boron concentration.

D. Equal to 3.0 %ΔK/K because shutdown margin in an operating reactor will not change unless control rod position changes.

ANSWER: B.

TOPIC: 192002
KNOWLEDGE: K1.14 [3.8/3.9]
QID: P3647 (B3648)

A reactor is initially operating at steady-state 60 percent power near the end of a fuel cycle when a fully withdrawn control rod suddenly inserts completely into the core. No operator action is taken and the plant control systems stabilize the reactor at a power level in the power range.

Compared to the initial available shutdown margin (SDM), the current available SDM is _____; and compared to the initial core K_{eff}, the current core K_{eff} is _____.

A. the same; smaller

B. the same; the same

C. less negative; smaller

D. less negative; the same

ANSWER: B.

TOPIC: 192002
KNOWLEDGE: K1.14 [3.8/3.9]
QID: P3747 (B3748)

A nuclear power plant has just completed a refueling outage. Based on the expected core loading, reactor engineers have predicted a control rod configuration at which the reactor will become critical during the initial reactor startup following the refueling outage. However, the burnable poisons scheduled to be loaded were inadvertently omitted.

Which one of the following describes the effect of the burnable poison omission on achieving reactor criticality during the initial reactor startup following the refueling outage?

A. The reactor will become critical before the predicted critical control rod configuration is achieved.

B. The reactor will become critical after the predicted critical control rod configuration is achieved.

C. The reactor will be unable to achieve criticality because the fuel assemblies contain insufficient positive reactivity to make the reactor critical.

D. The reactor will be unable to achieve criticality because the control rods contain insufficient positive reactivity to make the reactor critical.

ANSWER: A.

TOPIC: 192002
KNOWLEDGE: K1.14 [3.8/3.9]
QID: P4224

A reactor is shutdown with the reactor vessel head removed for refueling. The core is covered by 23 feet of refueling water at 100°F with a boron concentration of 2,000 ppm.

Which one of the following will decrease core K_{eff}?

A. An unrodded spent fuel assembly is removed from the core.

B. Refueling water temperature is increased to 105°F.

C. A depleted neutron source is removed from the core.

D. Refueling water boron concentration is decreased by 5 ppm.

ANSWER: A.

TOPIC: 192002
KNOWLEDGE: K1.14 [3.8/3.9]
QID: P4924

Reactors A and B are identical except that reactor A is operating near the beginning of a fuel cycle (BOC) and reactor B is operating near the end of a fuel cycle (EOC). Both reactors are operating at 100 percent power with all control rods fully withdrawn.

If the total reactivity worth of the control rods is the same for both reactors, which reactor will have the smaller K_{eff} five minutes after a reactor trip, and why?

A. Reactor A, because the power coefficient is less negative near the BOC.

B. Reactor A, because the concentration of U-235 in the fuel rods is higher near the BOC.

C. Reactor B, because the power coefficient is more negative near the EOC.

D. Reactor B, because the concentration of U-235 in the fuel rods is lower near the EOC.

ANSWER: A.

TOPIC: 192002
KNOWLEDGE: K1.14 [3.8/3.9]
QID: P5324

A reactor is shutdown with the reactor vessel head removed for refueling. The core is covered by 23 feet of refueling water at 105°F with a boron concentration of 2,000 ppm.

Which one of the following will decrease K_{eff}?

A. Refueling water temperature decreases by 5°F.

B. A depleted neutron source is removed from the core.

C. A spent fuel assembly is replaced with a new fuel assembly.

D. Refueling water boron concentration decreases by 5 ppm.

ANSWER: A.

TOPIC: 192002
KNOWLEDGE: K1.14 [3.8/3.9]
QID: P6224

Reactors A and B are identical except that reactor A is operating near the beginning of a fuel cycle (BOC) and reactor B is operating near the end of a fuel cycle (EOC). Both reactors are operating at 100 percent power with all control rods fully withdrawn.

If the total reactivity worth of the control rods is the same for both reactors, which reactor will have the greater K_{eff} five minutes after a reactor trip, and why?

A. Reactor A, because the pre-trip reactor coolant boron concentration is lower near the BOC.

B. Reactor A, because the power coefficient adds less positive reactivity after a trip near the BOC.

C. Reactor B, because the pre-trip reactor coolant boron concentration is higher near the EOC.

D. Reactor B, because the power coefficient adds more positive reactivity after a trip near the EOC.

ANSWER: D.

TOPIC: 192002
KNOWLEDGE: K1.14 [3.8/3.9]
QID: P6624

A nuclear power plant was initially operating at steady state 70 percent power near the middle of a fuel cycle when a control rod dropped into the core. Consider the following two possible operator responses:

Response 1: An operator adjusts the reactor coolant system (RCS) boron concentration to restore the initial reactor coolant temperatures.

Response 2: An operator withdraws some of the remaining control rods to restore the initial reactor coolant temperatures.

In a comparison between the two responses, which response, if any, will result in the greater shutdown margin (SDM) when the plant is stabilized at 70 percent power, and why?

A. Response 1, because a smaller (than response 2) amount of positive reactivity will be added by the RCS cooldown that occurs immediately after a reactor trip.

B. Response 2, because a larger (than response 1) amount of negative reactivity will be added by the control rods upon a reactor trip.

C. The SDM is the same for both responses because the plant is stabilized at the same initial steady state power level.

D. The SDM is the same for both responses because the same amount of positive reactivity is added in both responses.

ANSWER: B.

TOPIC: 192002
KNOWLEDGE: K1.14 [3.8/3.9]
QID: P7124

A reactor is shutdown with the reactor vessel head removed for refueling. The core is covered by 23 feet of refueling water at 120°F with a boron concentration of 2,000 ppm. Source range instrumentation indicates 100 cps.

How will source range indication be affected if refueling water temperature decreases to 100°F?

A. Indication will increase because the effect of increased K_{eff} more than offsets the effect of decreased neutron leakage from the core.

B. Indication will increase because of the cooperative effects of increased neutron leakage from the core and increased K_{eff}.

C. Indication will decrease because the effect of decreased neutron leakage from the core more than offsets the effect of increased K_{eff}.

D. Indication will decrease because of the cooperative effects of decreased K_{eff} and decreased neutron leakage from the core.

ANSWER: D.

TOPIC: 192002
KNOWLEDGE: K1.14 [3.8/3.9]
QID: P7224

A nuclear power plant was initially operating at equilibrium 100 percent power just prior to a refueling outage. The plant was shut down, refueled, restarted, and is currently operating at equilibrium 100 percent power. Assume the 100 percent power fission rate did <u>not</u> change.

Which one of the following describes the current plant status as compared to the conditions just prior to the refueling?

A. The reactor shutdown margin is greater.

B. The reactor coolant boron concentration is smaller.

C. The equilibrium core Xe-135 concentration is smaller.

D. The difference between the reactor coolant hot leg and cold leg temperatures is greater.

ANSWER: A.

TOPIC: 192003
KNOWLEDGE: K1.01 [2.7/2.8]
QID: P347 (B350)

Which one of the following is a characteristic of subcritical multiplication?

A. The subcritical neutron level is directly proportional to the neutron source strength.

B. Doubling the indicated count rate by reactivity additions will reduce the margin to criticality by approximately one quarter.

C. For equal reactivity additions, it takes less time for the new equilibrium source range count rate to be reached as K_{eff} approaches unity.

D. An incremental withdrawal of any given control rod will produce an equivalent equilibrium count rate increase, whether K_{eff} is 0.88 or 0.92.

ANSWER: A.

TOPIC: 192003
KNOWLEDGE: K1.01 [2.7/2.8]
QID: P1848 (B1170)

A nuclear power plant has been operating at 100 percent power for two months when a reactor trip occurs. Two months after the reactor trip, with all control rods still fully inserted, a stable count rate of 20 cps is indicated on the source range nuclear instruments.

The majority of the source range detector output is being caused by the interaction of _____ with the detector.

A. intrinsic source neutrons

B. fission gammas from previous power operation

C. fission neutrons from subcritical multiplication

D. delayed fission neutrons from previous power operation

ANSWER: C.

TOPIC: 192003
KNOWLEDGE: K1.01 [2.7/2.8]
QID: P7687 (B7687)

The total neutron flux in a shutdown reactor is constant at 5.0×10^3 n/cm^2-sec. If non-fission neutron sources are supplying a constant flux of 1.0×10^2 n/cm^2-sec, what is K_{eff}?

A. 0.98

B. 0.96

C. 0.94

D. Cannot be determined without additional information.

ANSWER: A.

TOPIC: 192003
KNOWLEDGE: K1.05 [2.7/2.8]
QID: P548

Reactor power was increased from 1.0×10^{-9} percent to 1.0×10^{-6} percent in 6 minutes. The average startup rate was _____ decades per minute.

A. 0.5

B. 1.3

C. 2.0

D. 5.2

ANSWER: A.

TOPIC: 192003
KNOWLEDGE: K1.05 [2.7/2.8]
QID: P648

Reactor power increases from 1.0 x 10^{-8} percent to 5.0 x 10^{-7} percent in two minutes. What was the average startup rate during the power increase?

A. 0.95 dpm

B. 0.90 dpm

C. 0.85 dpm

D. 0.82 dpm

ANSWER: C.

TOPIC: 192003
KNOWLEDGE: K1.05 [2.7/2.8]
QID: P2349

During a reactor startup, reactor power increases from 1.0 x 10^{-8} percent to 2.0 x 10^{-8} percent in two minutes. What was the average reactor period during the power increase?

A. 173 seconds

B. 235 seconds

C. 300 seconds

D. 399 seconds

ANSWER: A.

TOPIC: 192003
KNOWLEDGE: K1.05 [2.7/2.8]
QID: P2648

During a reactor startup, reactor power increases from 3.0×10^{-6} percent to 5.0×10^{-6} percent in two minutes. What was the average reactor period during the power increase?

A. 357 seconds

B. 235 seconds

C. 155 seconds

D. 61 seconds

ANSWER: B.

TOPIC: 192003
KNOWLEDGE: K1.06 [3.2/3.3]
QID: P47 (B451)

A small amount of positive reactivity is added to a reactor that is critical in the source range. The amount of reactivity added is much less than the effective delayed neutron fraction.

Which one of the following will have the most <u>significant</u> effect on the magnitude of the stable reactor period achieved for this reactivity addition while the reactor is in the source range?

A. Prompt neutron lifetime

B. Fuel temperature coefficient

C. Moderator temperature coefficient

D. Effective delayed neutron precursor decay constant

ANSWER: D.

TOPIC: 192003
KNOWLEDGE: K1.06 [3.2/3.3]
QID: P126

A nuclear power plant is operating at steady-state 50 percent power in the middle of a fuel cycle. Which one of the following will initially produce a positive startup rate?

A. Main turbine runback.

B. Unintentional boration.

C. Increase in main turbine load.

D. Closure of a letdown isolation valve.

ANSWER: C.

TOPIC: 192003
KNOWLEDGE: K1.06 [3.2/3.3]
QID: P248

The magnitude of the stable startup rate achieved for a given positive reactivity addition to a critical reactor is dependent on the _____ and _____.

A. prompt neutron lifetime; axial neutron flux distribution

B. prompt neutron lifetime; effective delayed neutron fraction

C. effective delayed neutron precursor decay constant; effective delayed neutron fraction

D. effective delayed neutron precursor decay constant; axial neutron flux distribution

ANSWER: C.

TOPIC: 192003
KNOWLEDGE: K1.06 [3.2/3.3]
QID: P2748 (B2751)

A reactor is critical at 1.0 x 10^{-8} percent power during a reactor startup. $\bar{\beta}_{eff}$ for this reactor is 0.0072. Which one of the following is the approximate amount of positive reactivity that must be added to the core by control rod withdrawal to attain a stable startup rate of 1.0 dpm?

A. 0.2 %ΔK/K

B. 0.5 %ΔK/K

C. 1.0 %ΔK/K

D. 2.0 %ΔK/K

ANSWER: A.

TOPIC: 192003
KNOWLEDGE: K1.06 [3.2/3.3]
QID: P3148 (B3151)

A reactor is being started for the first time following a refueling outage. Reactor Engineering has determined that during the upcoming fuel cycle, $\bar{\beta}_{eff}$ will range from a maximum of 0.007 to a minimum of 0.005.

Once the reactor becomes critical, control rods are withdrawn to increase reactivity by 0.1 %ΔK/K. Assuming <u>no</u> other reactivity additions, what will the stable reactor period be for this reactor until the point of adding heat is reached?

A. 20 seconds

B. 40 seconds

C. 60 seconds

D. 80 seconds

ANSWER: C.

TOPIC: 192003
KNOWLEDGE: K1.06 [3.2/3.3]
QID: P3548 (B3551)

Reactors A and B are identical except that the reactors are operating at different times in core life. The reactor A effective delayed neutron fraction is 0.007, and the reactor B effective delayed neutron fraction is 0.005. Both reactors are currently subcritical with neutron flux level stable in the source range.

Given:

Reactor A K_{eff} = 0.999
Reactor B K_{eff} = 0.998

If positive 0.003 $\Delta K/K$ is suddenly added to each reactor, how will the resulting stable startup rates (SUR) compare? (Consider only the reactor response while power is below the point of adding heat.)

A. Reactor A stable period will be shorter.

B. Reactor B stable period will be shorter.

C. Reactors A and B will have the same stable SUR because both reactors will remain subcritical.

D. Reactors A and B will have the same stable SUR because both reactors received the same amount of positive reactivity.

ANSWER: A.

TOPIC: 192003
KNOWLEDGE: K1.06 [3.2/3.3]
QID: P6825 (B6825)

Given the following stable initial conditions for a reactor:

Power level = 1.0×10^{-8} percent
K_{eff} = 0.999
Core $\bar{\beta}_{eff}$ = 0.006

What will the stable reactor period be following an addition of positive 0.15 %ΔK/K reactivity to the reactor? (Assume the stable reactor period occurs before the reactor reaches the point of adding heat.)

A. 30 seconds

B. 50 seconds

C. 80 seconds

D. 110 seconds

ANSWER: D.

TOPIC: 192003
KNOWLEDGE: K1.06 [3.2/3.3]
QID: P7225

Given the following stable initial conditions for a reactor:

Power level = 1.0×10^{-8} percent
K_{eff} = 0.999
Core $\overline{\beta}_{eff}$ = 0.006

What will the stable startup rate be following an addition of positive 0.2 %ΔK/K reactivity to the reactor? (Assume the stable startup rate occurs before the reactor reaches the point of adding heat.)

A. 0.24 dpm

B. 0.33 dpm

C. 0.52 dpm

D. 1.30 dpm

ANSWER: C.

TOPIC: 192003
KNOWLEDGE: K1.06 [3.2/3.3]
QID: P7607

A nuclear power plant has just completed a refueling outage and a reactor startup is in progress. Reactor engineers have determined that during the upcoming fuel cycle, $\bar{\beta}_{eff}$ will range from a minimum of 0.0052 to a maximum of 0.0064.

After the reactor becomes critical, control rods are withdrawn further to increase reactivity by an additional 0.1 %ΔK/K. Assuming no other reactivity changes occur, what will the approximate stable startup rate be for this reactor until the point of adding heat is reached?

A. 1.0 dpm

B. 0.6 dpm

C. 0.5 dpm

D. 0.3 dpm

ANSWER: C.

TOPIC: 192003
KNOWLEDGE: K1.07 [3.0/3.0]
QID: P48 (B1950)

During a fuel cycle, plutonium isotopes are produced with delayed neutron fractions that are _____ than the delayed neutron fractions for uranium isotopes, thereby causing reactor power transients to be _____ near the end of a fuel cycle.

A. larger; slower

B. larger; faster

C. smaller; slower

D. smaller; faster

ANSWER: D.

TOPIC: 192003
KNOWLEDGE: K1.07 [3.0/3.0]
QID: P129

Following a reactor trip, when does the startup rate initially stabilize at –1/3 dpm?

A. When decay gamma heating starts adding negative reactivity.

B. When the long-lived delayed neutron precursors have decayed away.

C. When the installed neutron source contribution to the total neutron flux becomes significant.

D. When the short-lived delayed neutron precursors have decayed away.

ANSWER: D.

TOPIC: 192003
KNOWLEDGE: K1.07 [3.0/3.0]
QID: P249

Delayed neutrons contribute more to reactor stability than prompt neutrons because they _____ the average neutron generation time and are born at a _____ kinetic energy.

A. increase; lower

B. increase; higher

C. decrease; lower

D. decrease; higher

ANSWER: A.

TOPIC: 192003
KNOWLEDGE: K1.07 [3.0/3.0]
QID: P348 (B2450)

Which one of the following statements describes the effect of changes in the delayed neutron fraction from the beginning of a fuel cycle (BOC) to the end of a fuel cycle (EOC)?

A. A given reactivity addition to a shutdown reactor at EOC yields a larger change in shutdown margin (SDM) than at BOC.

B. A given reactivity addition to a shutdown reactor at EOC yields a smaller change in SDM than at BOC.

C. A given reactivity addition to an operating reactor at EOC results in a higher startup rate (SUR) than at BOC.

D. A given reactivity addition to an operating reactor at EOC results in a lower SUR than at BOC.

ANSWER: C.

TOPIC: 192003
KNOWLEDGE: K1.07 [3.0/3.0]
QID: P1149 (B2651)

Delayed neutrons are important for reactor control because...

A. they are produced with a higher average kinetic energy than prompt neutrons.

B. they prevent the moderator temperature coefficient from becoming positive.

C. they are the largest fraction of the neutrons produced from fission.

D. they greatly extend the average lifetime of each neutron generation.

ANSWER: D.

TOPIC: 192003
KNOWLEDGE: K1.07 [3.0/3.0]
QID: P1248 (B1349)

Two reactors are identical except that reactor A is near the end of a fuel cycle and reactor B is near the beginning of a fuel cycle. Both reactors are operating at 100 percent power when a reactor trip occurs at the same time on each reactor.

If no operator action is taken and the reactor systems for both reactors respond identically to the trip, reactor A will attain a negative _____ second stable period; and reactor B will attain a negative _____ second stable period.

A. 80; 56

B. 80; 80

C. 56; 56

D. 56; 80

ANSWER: B.

TOPIC: 192003
KNOWLEDGE: K1.07 [3.0/3.0]
QID: P1548 (B1250)

Two reactors are identical except that reactor A is near the end of a fuel cycle and reactor B is near the beginning of a fuel cycle. Both reactors are critical at 1.0×10^{-5} percent power.

If the same amount of positive reactivity is added to each reactor at the same time, the point of adding heat will be reached first by reactor _____ because it has a _____ effective delayed neutron fraction.

A. A; smaller

B. A; larger

C. B; smaller

D. B; larger

ANSWER: A.

TOPIC: 192003
KNOWLEDGE: K1.07 [3.0/3.0]
QID: P1649 (B1649)

Two reactors are identical except that reactor A is near the end of core life and reactor B is near the beginning of core life. Both reactors are operating at 100 percent power when a reactor trip occurs at the same time on each reactor.

If <u>no</u> operator action is taken and the reactor systems for both reactors respond identically to the trip, a power level of 1.0×10^{-5} percent will be reached first by reactor _____ because it has the _____ effective delayed neutron fraction.

A. A; larger

B. B; larger

C. A; smaller

D. B; smaller

ANSWER: C.

TOPIC: 192003
KNOWLEDGE: K1.07 [3.0/3.0]
QID: P1749 (B1751)

Which one of the following is the reason that delayed neutrons are so effective at controlling the rate of reactor power changes?

A. Delayed neutrons make up a large fraction of the fission neutrons compared to prompt neutrons.

B. Delayed neutrons have a long mean generation time compared to prompt neutrons.

C. Delayed neutrons produce a large amount of fast fission compared to prompt neutrons.

D. Delayed neutrons are born with high kinetic energy compared to prompt neutrons.

ANSWER: B.

TOPIC: 192003
KNOWLEDGE: K1.07 [3.0/3.0]
QID: P2249 (B2250)

Which one of the following distributions of fission percentages occurring in a reactor will result in the largest effective delayed neutron fraction?

	U-235	U-238	Pu-239
A.	90%	7%	3%
B.	80%	6%	14%
C.	70%	7%	23%
D.	60%	6%	34%

ANSWER: A.

TOPIC: 192003
KNOWLEDGE: K1.07 [3.0/3.0]
QID: P2348 (B2349)

Which one of the following distributions of fission percentages occurring in a reactor will result in the smallest effective delayed neutron fraction?

	U-235	U-238	Pu-239
A.	90%	7%	3%
B.	80%	6%	14%
C.	70%	7%	23%
D.	60%	6%	34%

ANSWER: D.

TOPIC: 192003
KNOWLEDGE: K1.07 [3.0/3.0]
QID: P2849 (B2850)

Two reactors are identical except that reactor A is near the beginning of core life and reactor B is near the end of core life. Both reactors are critical at 10^{-5} percent power.

If the same amount of positive reactivity is added to each reactor at the same time, the point of adding heat will be reached first by reactor _____ because it has a _____ effective delayed neutron fraction.

A. A; smaller

B. A; larger

C. B; smaller

D. B; larger

ANSWER: C.

TOPIC: 192003
KNOWLEDGE: K1.07 [3.0/3.0]
QID: P2948 (B2950)

A nuclear power plant is operating at steady-state 50 percent power when a control rod is ejected from the core. Which one of the following distributions of fission percentages in the core would result in the highest startup rate? (Assume the reactivity worth of the ejected control rod is the same for each distribution.)

	U-235	U-238	Pu-239
A.	90%	8%	2%
B.	80%	7%	13%
C.	70%	7%	23%
D.	60%	8%	32%

ANSWER: D.

TOPIC: 192003
KNOWLEDGE: K1.07 [3.0/3.0]
QID: P3248 (B3249)

Two reactors are identical except that reactor A is near the end of core life and reactor B is near the beginning of core life. Both reactors are operating at 100 percent power when a reactor trip occurs at the same time on each reactor. No operator action is taken and the reactor systems for both reactors respond identically to the trip.

Ten minutes after the trip, the greater thermal neutron flux will exist in reactor _____ because it has a _____ effective delayed neutron fraction.

A. A; larger

B. B; larger

C. A; smaller

D. B; smaller

ANSWER: B.

TOPIC: 192003
KNOWLEDGE: K1.07 [3.0/3.0]
QID: P3648 (B3650)

Two reactors are identical except that reactor A is near the beginning of core life and reactor B is near the end of core life. Both reactors are operating at 100 percent power when a reactor trip occurs at the same time on each reactor. No operator action is taken and the reactor systems for both reactors respond identically to the trip.

Ten minutes after the trip, the greater thermal neutron flux will exist in reactor _____ because it has a _____ effective delayed neutron fraction.

A. A; larger

B. B; larger

C. A; smaller

D. B; smaller

ANSWER: A.

TOPIC: 192003
KNOWLEDGE: K1.07 [3.0/3.0]
QID: P3748 (B3749)

A step positive reactivity addition of 0.001 ΔK/K is made to a reactor with a stable neutron flux and an initial K_{eff} of 0.99. Consider the following two cases:

Case 1: The reactor is near the beginning of a fuel cycle.
Case 2: The reactor is near the end of a fuel cycle.

Assume the initial neutron flux is the same for each case.

Which one of the following correctly compares the prompt jump in neutron flux levels and the final stable neutron flux levels for the two cases?

A. The prompt jump will be greater for case 1, but the final stable neutron flux level will be the same for both cases.

B. The prompt jump will be greater for case 2, but the final stable neutron flux level will be the same for both cases.

C. The prompt jump will be the same for both cases, but the final stable neutron flux level will be greater for case 1.

D. The prompt jump will be the same for both cases, but the final stable neutron flux level will be greater for case 2.

ANSWER: B.

TOPIC: 192003
KNOWLEDGE: K1.07 [3.0/3.0]
QID: P3849

A reactor is critical in the source range during the initial reactor startup immediately following a refueling outage. The effective delayed neutron fraction is 0.0062. The operator adds positive reactivity to establish a stable 0.5 dpm startup rate.

If the reactor had been near the end of a fuel cycle with an effective delayed neutron fraction of 0.005, what would the approximate stable startup rate be after the addition of the same amount of positive reactivity?

A. 0.55 dpm

B. 0.65 dpm

C. 0.75 dpm

D. 0.85 dpm

ANSWER: B.

TOPIC: 192003
KNOWLEDGE: K1.07 [3.0/3.0]
QID: P4425 (B4425)

The following data is given for the fuel in an operating reactor:

Nuclide	Delayed Neutron Fraction	Fraction of Total Fuel Composition	Fraction of Total Fission Rate
U-235	0.0065	0.03	0.73
U-238	0.0148	0.96	0.07
Pu-239	0.0021	0.01	0.20

What is the delayed neutron fraction for this reactor?

A. 0.0052

B. 0.0054

C. 0.0062

D. 0.0068

ANSWER: C.

TOPIC: 192003
KNOWLEDGE: K1.07 [3.0/3.0]
QID: P5425 (B5425)

The following data is given for the fuel in an operating reactor:

Nuclide	Delayed Neutron Fraction	Fraction of Total Fuel Composition	Fraction of Total Fission Rate
U-235	0.0065	0.023	0.63
U-238	0.0148	0.965	0.07
Pu-239	0.0021	0.012	0.30

What is the delayed neutron fraction for this reactor?

A. 0.0052

B. 0.0058

C. 0.0072

D. 0.0078

ANSWER: B.

TOPIC: 192003
KNOWLEDGE: K1.07 [3.0/3.0]
QID: P5525 (B5525)

Which characteristic of delayed neutrons is primarily responsible for enhancing the stability of a reactor following a reactivity change?

A. They are born at a lower average energy than prompt neutrons.

B. They are more likely to experience resonance absorption than prompt neutrons.

C. They comprise a smaller fraction of the total neutron flux than prompt neutrons.

D. They require more time to be produced following a fission event than prompt neutrons.

ANSWER: D.

TOPIC: 192003
KNOWLEDGE: K1.07 [3.0/3.0]
QID: P5725 (B5725)

For an operating reactor, the effective delayed neutron fraction may differ from the delayed neutron fraction because, compared to prompt neutrons, delayed neutrons...

A. are less likely to leak out of the reactor core, and are less likely to cause fast fission.

B. are less likely to cause fast fission, and require more time to complete a neutron generation.

C. require more time to complete a neutron generation, and spend less time in the resonance absorption energy region.

D. spend less time in the resonance absorption energy region, and are less likely to leak out of the reactor core.

ANSWER: A.

TOPIC: 192003
KNOWLEDGE: K1.07 [3.0/3.0]
QID: P5825 (B5825)

Given the following data for a reactor:

- The average delayed neutron fraction is 0.0068.
- The effective delayed neutron fraction is 0.0065.

The above data indicates that this reactor is operating near the _____ of a fuel cycle; and a typical delayed neutron is _____ likely than a typical prompt neutron to cause another fission in this reactor.

A. beginning; less

B. beginning; more

C. end; less

D. end; more

ANSWER: A.

TOPIC: 192003
KNOWLEDGE: K1.07 [3.0/3.0]
QID: P5925 (B5925)

A reactor is initially critical at a stable power level below the point of adding heat (POAH) and remains below the POAH for the following two cases:

Case 1: An operator adds positive 1.0×10^{-4} ΔK/K reactivity to the reactor.
Case 2: An operator adds negative 1.0×10^{-4} ΔK/K reactivity to the reactor.

The time required for reactor power to change by a factor of 10 will be greater in case _____ because delayed neutrons are more effective at slowing reactor power changes when reactor power is _____.

A. 1; increasing

B. 1; decreasing

C. 2; increasing

D. 2; decreasing

ANSWER: D.

TOPIC: 192003
KNOWLEDGE: K1.07 [3.0/3.0]
QID: P6225 (B6225)

Two identical reactors, A and B, are critical at 1.0×10^{-8} percent power near the beginning of a fuel cycle. Simultaneously, positive 0.001 ΔK/K is added to reactor A, and negative 0.001 ΔK/K is added to reactor B. One minute later, which reactor, if any, will have the shorter period and why?

A. Reactor A, because delayed neutrons are less effective at slowing down power changes when the fission rate is increasing.

B. Reactor B, because delayed neutrons are less effective at slowing down power changes when the fission rate is decreasing.

C. The periods in both reactors will be the same because their effective delayed neutron fractions are the same.

D. The periods in both reactors will be the same because the absolute values of the reactivity additions are the same.

ANSWER: A.

TOPIC: 192003
KNOWLEDGE: K1.07 [3.0/3.0]
QID: P6325 (B6325)

The following data is given for the fuel in an operating reactor just prior to a refueling shutdown.

Nuclide	Delayed Neutron Fraction	Fraction of Total Fission Rate
U-235	0.0065	0.64
U-238	0.0148	0.07
Pu-239	0.0021	0.29

During the refueling, one-third of the fuel assemblies were offloaded and replaced with new fuel assemblies consisting of uranium having an average U-235 enrichment of 3.5 percent by weight.

Which one of the following describes how the above data will change as a result of completing the refueling outage?

A. The delayed neutron fraction for U-235 will decrease.

B. The delayed neutron fraction for Pu-239 will decrease.

C. The fraction of the total fission rate attributed to U-235 will increase.

D. The fraction of the total fission rate attributed to Pu-239 will increase.

ANSWER: C.

TOPIC: 192003
KNOWLEDGE: K1.07 [3.0/3.0]
QID: P6525 (B6525)

Which one of the following is the major cause for the change in the delayed neutron fraction from the beginning to the end of a fuel cycle?

A. Burnup of the burnable poisons.

B. Changes in the fuel composition.

C. Buildup of fission product poisons.

D. Shift in the core axial power distribution.

ANSWER: B.

TOPIC: 192003
KNOWLEDGE: K1.07 [3.0/3.0]
QID: P7025 (B7025)

Given the following data for the fuel in an operating reactor:

Nuclide	Delayed Neutron Fraction	Cross Section for Thermal Fission	Fraction of Total Fission Rate
U-235	0.0065	531 barns	0.58
U-238	0.0148	< 1 barn	0.06
Pu-239	0.0021	743 barns	0.32
Pu-241	0.0049	1009 barns	0.04

What is the delayed neutron fraction for this reactor?

A. 0.0044

B. 0.0055

C. 0.0063

D. 0.0071

ANSWER: B.

TOPIC: 192003
KNOWLEDGE: K1.07 [3.0/3.0]
QID: P7325 (B7325)

A nuclear reactor is operating at steady-state 100 percent power in the middle of a fuel cycle. Which one of the following changes would cause the core effective delayed neutron fraction to increase?

A. The fast nonleakage factor increases.

B. The fast nonleakage factor decreases.

C. The thermal utilization factor increases.

D. The thermal utilization factor decreases.

ANSWER: B.

TOPIC: 192003
KNOWLEDGE: K1.07 [3.0/3.0]
QID: P7617 (B7617)

Given the following data for a reactor:

- The average delayed neutron fraction is 0.0052.
- The effective delayed neutron fraction is 0.0054.

The above data indicates that the reactor is operating near the _____ of a fuel cycle, and that a typical delayed neutron is _____ likely than a typical prompt neutron to cause another fission in this reactor.

A. beginning; less

B. beginning; more

C. end; less

D. end; more

ANSWER: D.

TOPIC: 192003
KNOWLEDGE: K1.07 [3.0/3.0]
QID: P7697 (B7697)

A reactor core has a delayed neutron importance factor of 1.02. If the average delayed neutron fraction in the core is 0.0057, the effective delayed neutron fraction is...

A. equal to 0.0057.

B. less than 0.0057.

C. greater than 0.0057.

D. unpredictable without additional information.

ANSWER: C.

TOPIC: 192003
KNOWLEDGE: K1.07 [3.0/3.0]
QID: P7707 (B7707)

Which one of the following is the primary reason that delayed neutrons are more effective than prompt neutrons at controlling the rate of reactor power changes?

A. Delayed neutrons have a longer mean generation time than prompt neutrons.

B. Delayed neutrons produce a larger amount of core fissions than prompt neutrons.

C. Delayed neutrons make up a larger fraction of fission neutrons than prompt neutrons.

D. Delayed neutrons are born with a lower average kinetic energy than prompt neutrons.

ANSWER: A.

TOPIC: 192003
KNOWLEDGE: K1.08 [2.8/2.9]
QID: P549 (B3351)

Which one of the following describes a condition in which a reactor is prompt critical?

A. A very long reactor period makes reactor control very sluggish and unresponsive.

B. Fissions are occurring so rapidly that the effective delayed neutron fraction approaches zero.

C. Any increase in reactor power requires a reactivity addition equal to the fraction of prompt neutrons in the core.

D. The net positive reactivity in the core is greater than or equal to the magnitude of the effective delayed neutron fraction.

ANSWER: D.

TOPIC: 192003
KNOWLEDGE: K1.08 [2.8/2.9]
QID: P748

A critical reactor will become prompt critical when the reactivity is equal to the...

A. shutdown margin.

B. effective delayed neutron fraction.

C. effective decay constant.

D. worth of the most reactive rod.

ANSWER: B.

TOPIC: 192003
KNOWLEDGE: K1.08 [2.8/2.9]
QID: P949

A reactor is operating at 75 percent power with the following conditions:

Power defect	=	-0.0157 Δ/K/K
Shutdown margin	=	0.0241 Δ/K/K
Effective delayed neutron fraction	=	0.0058
Effective prompt neutron fraction	=	0.9942

How much positive reactivity must be added to make the reactor <u>prompt</u> critical?

A. 0.0157 ΔK/K

B. 0.0241 ΔK/K

C. 0.0058 ΔK/K

D. 0.9942 ΔK/K

ANSWER: C.

TOPIC: 192003
KNOWLEDGE: K1.08 [2.8/2.9]
QID: P1449

A reactor with a xenon-free core is critical several decades below the point of adding heat (POAH). The operator continuously withdraws control rods until a positive 0.5 dpm startup rate (SUR) is reached and then stops control rod motion.

When rod motion is stopped, the SUR will immediately... (Ignore any reactivity effects from fission product poisons.)

A. stabilize at 0.5 dpm until power reaches the POAH.

B. decrease, and then stabilize at a value less than 0.5 dpm until power reaches the POAH.

C. stabilize at 0.5 dpm, and then slowly and continuously decrease until power reaches the POAH.

D. decrease, and then continue to slowly decrease until power reaches the POAH.

ANSWER: B.

TOPIC: 192003
KNOWLEDGE: K1.08 [2.8/2.9]
QID: P1948 (B1150)

Positive reactivity is continuously added to a critical reactor. Which one of the following values of K_{eff} will first result in a prompt critical reactor?

A. 1.0001

B. 1.001

C. 1.01

D. 1.1

ANSWER: C.

TOPIC: 192003
KNOWLEDGE: K1.08 [2.8/2.9]
QID: P2049

A reactor initially has a stable positive 1.0 dpm startup rate with no control rod motion several decades below the point of adding heat (POAH). Control rods are inserted until a positive 0.5 dpm startup rate is attained and then stopped.

When rod insertion is stopped, startup rate will immediately...

A. stabilize at 0.5 dpm until power reaches the POAH.

B. increase, and then stabilize at a value greater than 0.5 dpm until power reaches the POAH.

C. continuously decrease until startup rate becomes zero when power reaches the POAH.

D. increase, and then slowly and continuously decrease until startup rate becomes zero when power reaches the POAH.

ANSWER: B.

TOPIC: 192003
KNOWLEDGE: K1.08 [2.8/2.9]
QID: P2549 (B2550)

A reactor was stable at 80 percent power when the operator withdrew a control rod continuously for 2 seconds. Which one of the following affects the amount of "prompt jump" increase in reactor power for the control rod withdrawal?

A. The total control rod worth

B. The differential control rod worth

C. The duration of control rod withdrawal

D. The magnitude of the fuel temperature coefficient

ANSWER: B.

TOPIC: 192003
KNOWLEDGE: K1.08 [2.8/2.9]
QID: P2949 (B2951)

A reactor is operating at steady-state 75 percent power with the following conditions:

Power defect	=	-0.0185 ΔK/K
Shutdown margin	=	-0.0227 ΔK/K
Effective delayed neutron fraction	=	0.0061
Effective prompt neutron fraction	=	0.9939

How much positive reactivity must be added to make the reactor <u>prompt</u> critical?

A. 0.0061 ΔK/K

B. 0.0185 ΔK/K

C. 0.0227 ΔK/K

D. 0.9939 ΔK/K

ANSWER: A.

TOPIC: 192003
KNOWLEDGE: K1.08 [2.8/2.9]
QID: P3249 (B3250)

Refer to the partially labeled reactor response curve shown below for a reactor that was initially stable in the source range. Both axes have linear scales. A small amount of positive reactivity was added at time = 0 sec.

The response curve shows _____ versus time for a reactor that was initially _____.

A. startup rate; subcritical

B. startup rate; critical

C. reactor fission rate; subcritical

D. reactor fission rate; critical

ANSWER: C.

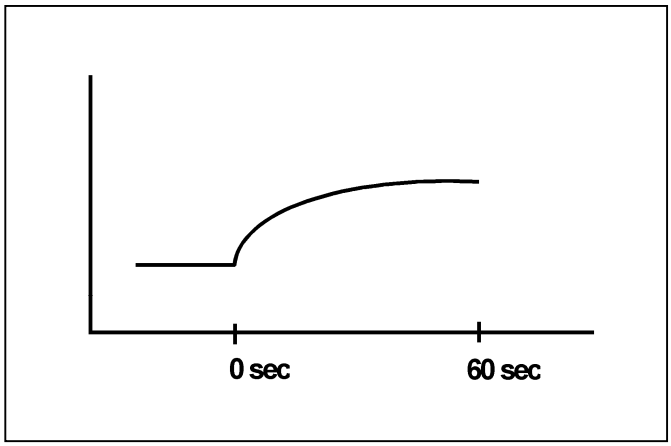

TOPIC: 192003
KNOWLEDGE: K1.08 [2.8/2.9]
QID: P3449 (B3450)

Two reactors are critical at the same power level well below the point of adding heat. The reactors are identical except that reactor A is near the beginning of a fuel cycle (BOC) and reactor B is near the end of a fuel cycle (EOC).

If a step addition of positive 0.001 ΔK/K is added to each reactor, the size of the prompt jump in power level observed in reactor B (EOC) will be _____ than in reactor A (BOC); and the stable startup rate observed in reactor B (EOC) will be _____ than in reactor A (BOC). (Assume the power level in each reactor remains below the point of adding heat.)

A. smaller; smaller

B. smaller; larger

C. larger; smaller

D. larger; larger

ANSWER: D.

TOPIC: 192003
KNOWLEDGE: K1.08 [2.8/2.9]
QID: P3649 (B3651)

Refer to the partially labeled reactor response curve shown below for a reactor that was initially subcritical in the source range and remained below the point of adding heat. A small amount of positive reactivity was added at time = 0 sec.

The response curve shows _____ versus time for a reactor that is currently (at time = 60 sec) _____.

A. startup rate; exactly critical

B. startup rate; supercritical

C. reactor fission rate; exactly critical

D. reactor fission rate; supercritical

ANSWER: D.

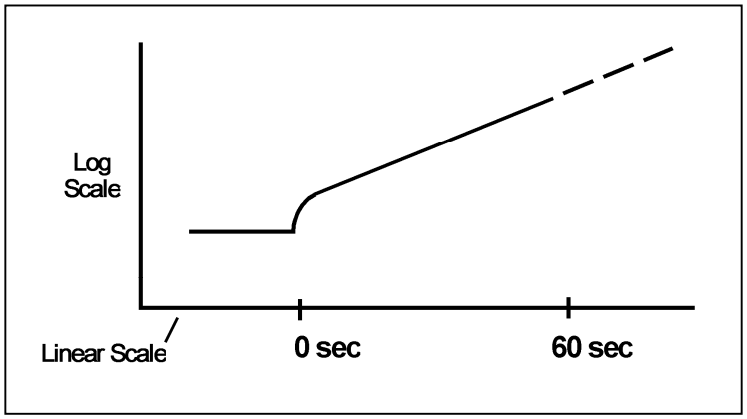

TOPIC: 192003
KNOWLEDGE: K1.08 [2.8/2.9]
QID: P3749 (B3750)

A reactor is operating at equilibrium 75 percent power with the following conditions:

Total power defect	=	-0.0176 ΔK/K
Shutdown margin	=	-0.0234 ΔK/K
Effective delayed neutron fraction	=	0.0067
Effective prompt neutron fraction	=	0.9933

How much positive reactivity must be added to make the reactor prompt critical?

A. 0.0067 ΔK/K

B. 0.0176 ΔK/K

C. 0.0234 ΔK/K

D. 0.9933 ΔK/K

ANSWER: A.

TOPIC: 192003
KNOWLEDGE: K1.11 [2.7/2.8]
QID: P49

Which one of the following is a characteristic of a neutron source installed in a reactor?

A. Maintains the production of neutrons high enough to allow the reactor to achieve criticality.

B. Provides a means to allow reactivity changes to occur in a subcritical reactor.

C. Generates a sufficient neutron population to start the fission process and initiate subcritical multiplication.

D. Provides a neutron level that is detectable on the source range nuclear instrumentation.

ANSWER: D.

TOPIC: 192003
KNOWLEDGE: K1.11 [2.7/2.8]
QID: P349

Neutron sources are installed in a reactor for which one of the following reasons?

A. To decrease the amount of fuel load required for criticality.

B. To compensate for neutrons being absorbed by burnable poisons.

C. To augment the shutdown neutron flux to allow detection on nuclear instrumentation.

D. To provide sufficient neutron flux to achieve criticality during a reactor startup following a long-term shutdown.

ANSWER: C.

TOPIC: 192003
KNOWLEDGE: K1.11 [2.7/2.8]
QID: P1249

Which one of the following neutron reactions yields the highest neutron production rate immediately following a reactor trip from extended power operations during the tenth fuel cycle? (Ignore any contribution from an installed neutron source.)

A. Alpha-neutron reactions

B. Beta-neutron reactions

C. Photo-neutron reactions

D. Spontaneous fission

ANSWER: C.

TOPIC: 192003
KNOWLEDGE: K1.11 [2.7/2.8]
QID: P1549 (B1549)

Which one of the following neutron sources undergoes the most significant source strength reduction during the hour immediately following a reactor trip from steady-state 100 percent power?

A. Spontaneous fission reactions

B. Photo-neutron reactions

C. Alpha-neutron reactions

D. Transuranic isotope decay

ANSWER: B.

TOPIC: 192003
KNOWLEDGE: K1.11 [2.7/2.8]
QID: P2149 (B2150)

Which one of the following is the neutron source that produces the greatest neutron flux for the first few days following a reactor trip from extended high power operations?

A. Spontaneous neutron emission from control rods.

B. Photo-neutron reactions in the moderator.

C. Spontaneous fission in the fuel.

D. Alpha-neutron reactions in the fuel.

ANSWER: B.

TOPIC: 192003
KNOWLEDGE: K1.11 [2.7/2.8]
QID: P3149 (B967)

Which one of the following describes the purpose of a neutron source that is installed in a reactor during refueling for the third fuel cycle?

A. Ensures shutdown neutron level is large enough to be detected by nuclear instrumentation.

B. Provides additional excess reactivity to increase the length of the fuel cycle.

C. Amplifies the electrical noise fluctuations observed in source range instrumentation during shutdown.

D. Supplies the only shutdown source of neutrons available to begin a reactor startup.

ANSWER: A.

TOPIC: 192004
KNOWLEDGE: K1.01 [3.1/3.2]
QID: P133

The moderator temperature coefficient describes the change in reactivity per degree change in...

A. fuel temperature.

B. fuel cladding temperature.

C. reactor vessel temperature.

D. reactor coolant temperature.

ANSWER: D.

TOPIC: 192004
KNOWLEDGE: K1.02 [3.0/3.2]
QID: P650 (B1952)

Which one of the following isotopes is the <u>most</u> significant contributor to the resonance capture of fission neutrons in a reactor at the beginning of a fuel cycle?

A. U-238

B. U-233

C. Pu-240

D. Pu-239

ANSWER: A.

TOPIC: 192004
KNOWLEDGE: K1.02 [3.0/3.2]
QID: P1950 (B753)

Factors that affect the probability of resonance absorption of a neutron by a nucleus include...

A. excitation energy of the neutron, kinetic energy of the nucleus, and kinetic energy of the neutron.

B. kinetic energy of the neutron, excitation energy of the nucleus, and excitation energy of the neutron.

C. excitation energy of the nucleus, excitation energy of the neutron, and kinetic energy of the nucleus.

D. kinetic energy of the nucleus, kinetic energy of the neutron, and excitation energy of the nucleus.

ANSWER: D.

TOPIC: 192004
KNOWLEDGE: K1.02 [3.0/3.2]
QID: P2050 (B3352)

Which one of the following isotopes is the most significant contributor to the resonance capture of fission neutrons in a reactor at the end of a fuel cycle?

A. U-235

B. U-238

C. Pu-239

D. Pu-240

ANSWER: B.

TOPIC: 192004
KNOWLEDGE: K1.02 [3.0/3.2]
QID: P3150 (B3153)

Which one of the following has the smallest microscopic cross section for absorption of a thermal neutron in an operating reactor?

A. Uranium-235

B. Uranium-238

C. Samarium-149

D. Xenon-135

ANSWER: B.

TOPIC: 192004
KNOWLEDGE: K1.03 [2.9/3.1]
QID: P251

Under which one of the following conditions is a reactor most likely to have a positive moderator temperature coefficient?

A. High reactor coolant temperature at the beginning of a fuel cycle.

B. High reactor coolant temperature at the end of a fuel cycle.

C. Low reactor coolant temperature at the beginning of a fuel cycle.

D. Low reactor coolant temperature at the end of a fuel cycle.

ANSWER: C.

TOPIC: 192004
KNOWLEDGE: K1.03 [2.9/3.1]
QID: P1150

A reactor has operated at steady-state 100 percent power for the past 6 months. Compared to 6 months ago, the current moderator temperature coefficient is...

A. more negative, due to control rod withdrawal.

B. less negative, due to control rod insertion.

C. more negative, due to decreased reactor coolant boron concentration.

D. less negative, due to increased reactor coolant boron concentration.

ANSWER: C.

TOPIC: 192004
KNOWLEDGE: K1.03 [2.9/3.1]
QID: P1650 (B652)

Which one of the following contains the pair of nuclides that are the <u>most</u> significant contributors to the total resonance capture in the core near the end of a fuel cycle?

A. U-238 and Pu-239

B. U-238 and Pu-240

C. Pu-239 and U-235

D. Pu-239 and Pu-240

ANSWER: B.

TOPIC: 192004
KNOWLEDGE: K1.03 [2.9/3.1]
KNOWLEDGE: K1.06 [3.1/3.1]
QID: P2150

Which one of the following conditions will cause the moderator temperature coefficient (MTC) to become more negative? (Consider only the direct effect of the indicated change on MTC.)

A. The controlling bank of control rods is inserted 5 percent into the core.

B. Fuel temperature decreases from 1500°F to 1200°F.

C. Reactor coolant boron concentration increases by 20 ppm.

D. Moderator temperature decreases from 500°F to 450°F.

ANSWER: A.

TOPIC: 192004
KNOWLEDGE: K1.03 [2.9/3.1]
QID: P2151 (B2152)

Which one of the following contains the nuclides responsible for most of the resonance capture of fission neutrons in a reactor at the beginning of the sixth fuel cycle? (Assume that each refueling process replaces one-third of the fuel.)

A. U-235 and Pu-239

B. U-235 and U-238

C. U-238 and Pu-239

D. U-238 and Pu-240

ANSWER: D.

TOPIC: 192004
KNOWLEDGE: K1.03 [2.9/3.1]
QID: P2251

Which one of the following contains two isotopes that add significant negative reactivity when fuel temperature increases near the end of a fuel cycle?

A. U-235 and Pu-239

B. U-235 and Pu-240

C. U-238 and Pu-239

D. U-238 and Pu-240

ANSWER: D.

TOPIC: 192004
KNOWLEDGE: K1.03 [2.9/3.1]
QID: P7637 (B7637)

Which one of the following describes a situation where an increase in moderator temperature can add positive reactivity?

A. At low moderator temperatures, an increase in moderator temperature can reduce neutron leakage from the core sufficiently to add positive reactivity.

B. At low moderator temperatures, an increase in moderator temperature can reduce neutron capture by the moderator sufficiently to add positive reactivity.

C. At high moderator temperatures, an increase in moderator temperature can reduce neutron leakage from the core sufficiently to add positive reactivity.

D. At high moderator temperatures, an increase in moderator temperature can reduce neutron capture by the moderator sufficiently to add positive reactivity.

ANSWER: B.

TOPIC: 192004
KNOWLEDGE: K1.06 [3.1/3.1]
QID: P50

As the reactor coolant boron concentration increases, the moderator temperature coefficient becomes less negative. This is because a 1°F increase in reactor coolant temperature at higher boron concentrations results in a larger increase in the...

A. fast fission factor.

B. thermal utilization factor.

C. total nonleakage probability.

D. resonance escape probability.

ANSWER: B.

TOPIC: 192004
KNOWLEDGE: K1.06 [3.1/3.1]
QID: P123

In which one of the following conditions is the moderator temperature coefficient <u>most</u> negative?

A. Beginning of a fuel cycle (BOC), high reactor coolant temperature

B. BOC, low reactor coolant temperature

C. End of a fuel cycle (EOC), high reactor coolant temperature

D. EOC, low reactor coolant temperature

ANSWER: C.

TOPIC: 192004
KNOWLEDGE: K1.06 [3.1/3.1]
QID: P252

During a nuclear power plant heatup near the end of a fuel cycle, the moderator temperature coefficient becomes increasingly more negative. This is because...

A. as moderator density decreases, more thermal neutrons are absorbed by the moderator than by the fuel.

B. the change in the thermal utilization factor dominates the change in the resonance escape probability.

C. a greater density change per °F occurs at higher reactor coolant temperatures.

D. the core transitions from an undermoderated condition to an overmoderated condition.

ANSWER: C.

TOPIC: 192004
KNOWLEDGE: K1.06 [3.1/3.1]
QID: P450

The moderator temperature coefficient will be <u>least</u> negative at a _____ reactor coolant temperature and a _____ reactor coolant boron concentration.

A. high; high

B. high; low

C. low; high

D. low; low

ANSWER: C.

TOPIC: 192004
KNOWLEDGE: K1.06 [3.1/3.1]
QID: P751

A reactor is operating at full power following a refueling outage. Compared to the current moderator temperature coefficient (MTC), the MTC just prior to the refueling was...

A. less negative at all coolant temperatures.

B. more negative at all coolant temperatures.

C. less negative below approximately 350°F coolant temperature and more negative above approximately 350°F coolant temperature.

D. more negative below approximately 350°F coolant temperature and less negative above approximately 350°F coolant temperature.

ANSWER: B.

TOPIC: 192004
KNOWLEDGE: K1.06 [3.1/3.1]
QID: P951 (B2452)

During a reactor coolant system cooldown, positive reactivity is added to the core if the moderator temperature coefficient is negative. This is partially due to...

A. a decreasing thermal utilization factor.

B. an increasing thermal utilization factor.

C. a decreasing resonance escape probability.

D. an increasing resonance escape probability.

ANSWER: D.

TOPIC: 192004
KNOWLEDGE: K1.06 [3.1/3.1]
QID: P1250

As the core ages, the moderator temperature coefficient becomes more negative. This is primarily due to...

A. fission product poison buildup in the fuel.

B. decreasing fuel centerline temperature.

C. decreasing control rod worth.

D. decreasing reactor coolant boron concentration.

ANSWER: D.

TOPIC: 192004
KNOWLEDGE: K1.06 [3.1/3.1]
QID: P1450

The moderator temperature coefficient will be most negative at a _____ reactor coolant temperature and a _____ reactor coolant boron concentration.

A. low; low

B. high; low

C. low; high

D. high; high

ANSWER: B.

TOPIC: 192004
KNOWLEDGE: K1.06 [3.1/3.1]
QID: P1752

Which one of the following describes the initial reactivity effect of a moderator temperature decrease in an undermoderated reactor?

A. Negative reactivity will be added because more neutrons will be absorbed at resonance energies while slowing down.

B. Negative reactivity will be added because more neutrons will be captured by the moderator.

C. Positive reactivity will be added because fewer neutrons will be absorbed at resonance energies while slowing down.

D. Positive reactivity will be added because fewer neutrons will be captured by the moderator.

ANSWER: C.

TOPIC: 192004
KNOWLEDGE: K1.06 [3.1/3.1]
QID: P1850

Which one of the following describes why the moderator temperature coefficient is more negative near the end of a fuel cycle (EOC) compared to the beginning of a fuel cycle (BOC)?

A. Increased nucleate boiling near the EOC amplifies the negative reactivity added by a 1°F moderator temperature increase.

B. Increased control rod insertion near the EOC amplifies the negative reactivity added by a 1°F moderator temperature increase.

C. Decreased fuel temperature near the EOC results in reduced resonance neutron capture for a 1°F increase in moderator temperature.

D. Decreased coolant boron concentration near the EOC results in fewer boron atoms leaving the core for a 1°F moderator temperature increase.

ANSWER: D.

TOPIC: 192004
KNOWLEDGE: K1.06 [3.1/3.1]
QID: P2650 (B2652)

Which one of the following describes the initial reactivity effect of a moderator temperature decrease in an overmoderated reactor?

A. Positive reactivity will be added because fewer neutrons will be captured by the moderator while slowing down.

B. Positive reactivity will be added because fewer neutrons will be absorbed at resonance energies while slowing down.

C. Negative reactivity will be added because more neutrons will be captured by the moderator while slowing down.

D. Negative reactivity will be added because more neutrons will be absorbed at resonance energies while slowing down.

ANSWER: C.

TOPIC: 192004
KNOWLEDGE: K1.06 [3.1/3.1]
QID: P2750

A reactor is operating at 100 percent power following a refueling outage. Compared to the moderator temperature coefficient (MTC) just prior to the refueling, the current MTC is...

A. less negative at all coolant temperatures.

B. more negative at all coolant temperatures.

C. less negative below approximately 350°F coolant temperature and more negative above approximately 350°F coolant temperature.

D. more negative below approximately 350°F coolant temperature and less negative above approximately 350°F coolant temperature.

ANSWER: A.

TOPIC: 192004
KNOWLEDGE: K1.06 [3.1/3.1]
QID: P2950

Which one of the following describes the initial reactivity effect of a moderator temperature increase in an overmoderated reactor?

A. Negative reactivity will be added because more neutrons will be absorbed at resonance energies while slowing down.

B. Negative reactivity will be added because more neutrons will be captured by the moderator while slowing down.

C. Positive reactivity will be added because fewer neutrons will be absorbed at resonance energies while slowing down..

D. Positive reactivity will be added because fewer neutrons will be captured by the moderator while slowing down.

ANSWER: D.

TOPIC: 192004
KNOWLEDGE: K1.06 [3.1/3.1]
QID: P3151

How does the addition of boric acid to the reactor coolant affect the moderator temperature coefficient (MTC) in an undermoderated reactor?

A. The initially negative MTC becomes more negative.

B. The initially negative MTC becomes less negative.

C. The initially positive MTC becomes more positive.

D. The initially positive MTC becomes less positive.

ANSWER: B.

TOPIC: 192004
KNOWLEDGE: K1.06 [2.5/2.6]
QID: P3352

Compared to the moderator temperature coefficient (MTC) of reactivity near the beginning of a fuel cycle, the MTC near the end of a fuel cycle is: (Assume 100 percent power for all cases.)

A. more negative, because as U-235 depletes, more fission neutrons are able to escape resonance capture.

B. less negative, because as U-238 depletes, more fission neutrons are able to escape resonance capture.

C. more negative, because as reactor coolant boron concentration decreases, the thermal utilization of fission neutrons increases.

D. less negative, because as control rods are withdrawn from the core, the thermal utilization of fission neutrons increases.

ANSWER: C.

TOPIC: 192004
KNOWLEDGE: K1.06 [3.1/3.1]
QID: P3650 (B3652)

Which one of the following describes the initial reactivity effect of a moderator temperature increase in an undermoderated reactor?

A. Negative reactivity will be added because more neutrons will be absorbed by U-238 at resonance energies while slowing down.

B. Negative reactivity will be added because more neutrons will be captured by the moderator while slowing down.

C. Positive reactivity will be added because fewer neutrons will be absorbed by U-238 at resonance energies while slowing down.

D. Positive reactivity will be added because fewer neutrons will be captured by the moderator while slowing down.

ANSWER: A.

TOPIC: 192004
KNOWLEDGE: K1.06 [3.1/3.1]
QID: P6126

When compared to the beginning of a fuel cycle, the moderator temperature coefficient at 100 percent power near the end of a fuel cycle is...

A. more negative, because fewer boron-10 nuclei are removed from the core for a given moderator temperature increase.

B. less negative, because more boron-10 nuclei are removed from the core for a given moderator temperature increase.

C. more negative, because a smaller fraction of the neutron flux will leak out of the core following a given moderator temperature increase.

D. less negative, because a larger fraction of the neutron flux will leak out of the core following a given moderator temperature increase.

ANSWER: A.

TOPIC: 192004
KNOWLEDGE: K1.06 [3.1/3.1]
QID: P7426

How does increasing the reactor coolant boron concentration affect the moderator temperature coefficient (MTC) in an overmoderated reactor?

A. The initially negative MTC becomes more negative.

B. The initially negative MTC becomes less negative.

C. The initially positive MTC becomes more positive.

D. The initially positive MTC becomes less positive.

ANSWER: C.

TOPIC: 192004
KNOWLEDGE: K1.06 [3.1/3.1]
QID: P7667

A reactor is shut down near the middle of a fuel cycle with the shutdown cooling system in service. The initial reactor coolant temperature is 160ºF. In this condition, the reactor is undermoderated.

Then, a heatup and pressurization is performed to bring the reactor coolant system to normal operating temperature and pressure. The reactor remains subcritical.

During the heatup, K_{eff} will…

A. increase continuously.

B. decrease continuously.

C. initially increase, and then decrease.

D. initially decrease, and then increase.

ANSWER: B.

TOPIC: 192004
KNOWLEDGE: K1.07 [2.9/2.9]
QID: P51

Why does the fuel temperature coefficient becomes <u>less</u> negative at higher fuel temperatures?

A. As reactor power increases, the rate of increase in the fuel temperature diminishes.

B. Neutrons penetrate deeper into the fuel, resulting in an increase in the fast fission factor.

C. The amount of self-shielding increases, resulting in less neutron absorption by the inner fuel.

D. The amount of Doppler broadening per degree change in fuel temperature diminishes.

ANSWER: D.

TOPIC: 192004
KNOWLEDGE: K1.07 [2.9/2.9]
QID: P651

Which one of the following will cause the Doppler power coefficient to become more negative?

A. Increased clad creep

B. Increased pellet swell

C. Lower power level

D. Higher reactor coolant boron concentration

ANSWER: C.

TOPIC: 192004
KNOWLEDGE: K1.07 [2.9/2.9]
QID: P1052

A reactor is operating continuously at steady-state 100 percent power. As core burnup increases, the fuel temperature coefficient becomes _____ negative because the average fuel temperature _____.

A. more; decreases

B. more; increases

C. less; decreases

D. less; increases

ANSWER: A.

TOPIC: 192004
KNOWLEDGE: K1.07 [2.9/2.9]
QID: P1851

Which one of the following pairs of nuclides is responsible for most of the negative reactivity associated with a fuel temperature increase near the end of a fuel cycle?

A. U-235 and Pu-239

B. U-235 and Pu-240

C. U-238 and Pu-239

D. U-238 and Pu-240

ANSWER: D.

TOPIC: 192004
KNOWLEDGE: K1.07 [2.9/2.9]
QID: P1951

A nuclear power plant is operating at steady-state 70 percent power. Which one of the following will result in a less negative fuel temperature coefficient? (Consider only the direct effect of the change in each listed parameter.)

A. Increase in Pu-240 inventory in the core.

B. Increase in moderator temperature.

C. Increase in fuel temperature.

D. Increase in coolant voids.

ANSWER: C.

TOPIC: 192004
KNOWLEDGE: K1.07 [2.9/2.9]
QID: P2052

Compared to operation at a low power level, the fuel temperature coefficient of reactivity at a high power level is _____ negative due to _____.

A. less; improved pellet-to-clad heat transfer

B. more; buildup of fission product poisons

C. less; higher fuel temperature

D. more; increased neutron flux

ANSWER: C.

TOPIC: 192004
KNOWLEDGE: K1.07 [2.9/2.9]
QID: P2352 (B2453)

Refer to the curve of microscopic cross section for absorption versus neutron energy for a resonance peak in U-238 (see figure below).

If fuel temperature increases, the area under the curve will _____; and negative reactivity will be added to the core because _____.

A. increase; neutrons of a wider range of energies will be absorbed by U-238

B. increase; more neutrons will be absorbed by U-238 at the resonance neutron energy

C. remain the same; neutrons of a wider range of energies will be absorbed by U-238

D. remain the same; more neutrons will be absorbed by U-238 at the resonance neutron energy

ANSWER: C.

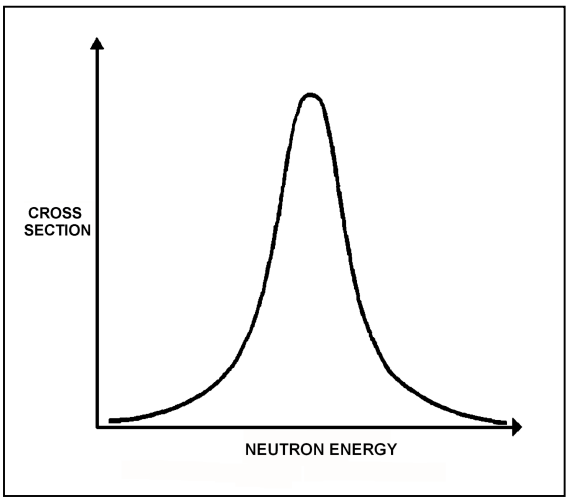

TOPIC: 192004
KNOWLEDGE: K1.07 [2.9/2.9]
QID: P2451

Which one of the following describes how the magnitude of the fuel temperature coefficient of reactivity is affected as the core ages?

A. It remains essentially constant over core life.

B. It becomes more negative, due to the buildup of Pu-240.

C. It becomes less negative, due to the decrease in RCS boron concentration.

D. It becomes more negative initially due to buildup of fissions product poisons, then less negative due to fuel depletion.

ANSWER: B.

TOPIC: 192004
KNOWLEDGE: K1.07 [2.9/2.9]
QID: P2651 (B2553)

In a comparison of the fuel temperature coefficient at the beginning and end of a fuel cycle, the fuel temperature coefficient is more negative at the _____ of a fuel cycle because _____. (Assume the same initial fuel temperature throughout the fuel cycle.)

A. end; more Pu-240 is in the core

B. end; more fission products are in the core

C. beginning; more U-238 is in the core

D. beginning; less fission products are in the core

ANSWER: A.

TOPIC: 192004
KNOWLEDGE: K1.07 [2.9/2.9]
QID: P2751 (B2753)

Refer to the curve of microscopic cross section for absorption versus neutron energy for a 6.7 electron volt (eV) resonance peak in U-238 for a reactor operating at 50 percent power (see figure below).

If fuel temperature decreases by 50°F, the area under the curve will _____; and positive reactivity will be added to the core because _____.

A. decrease; fewer neutrons will be absorbed by U-238 overall

B. decrease; fewer 6.7 eV neutrons will be absorbed by U-238 at the resonance energy

C. remain the same; fewer neutrons will be absorbed by U-238 overall

D. remain the same; fewer 6.7 eV neutrons will be absorbed by U-238 at the resonance energy

ANSWER: C.

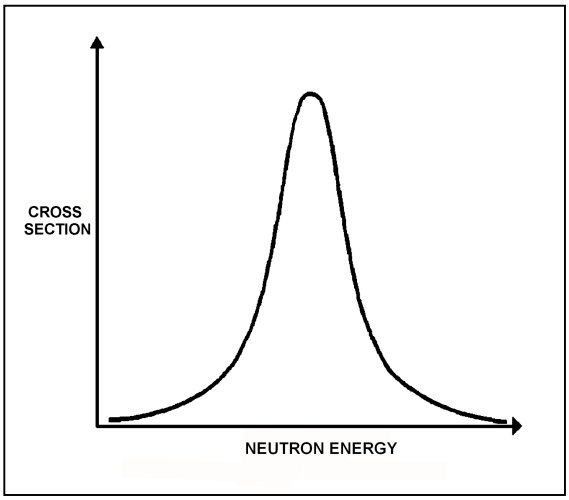

TOPIC: 192004
KNOWLEDGE: K1.07 [2.9/2.9]
QID: P2850 (B2852)

Refer to the curve of microscopic cross section for absorption versus neutron energy for a resonance peak in U-238 in a reactor operating at 80 percent power (see figure below).

If reactor power is increased to 100 percent, the height of the curve will _____; and the area under the curve will _____.

A. increase; increase

B. increase; remain the same

C. decrease; decrease

D. decrease; remain the same

ANSWER: D.

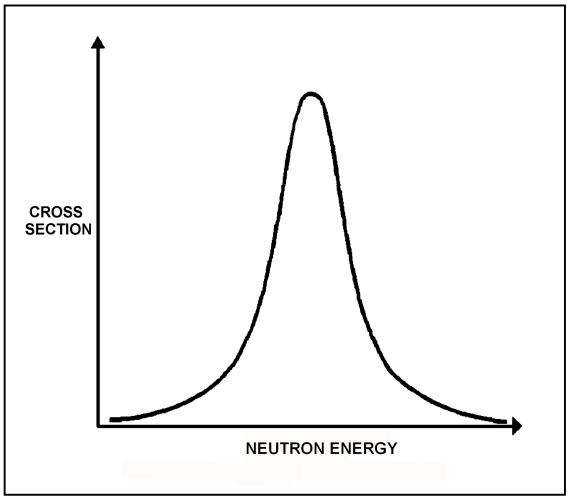

TOPIC: 192004
KNOWLEDGE: K1.07 [2.9/2.9]
QID: P3750 (B3753)

Refer to the drawing of a curve showing the neutron absorption characteristics of a typical U-238 nucleus at a resonance neutron energy (see figure below). The associated reactor is currently operating at steady-state 80 percent power.

During a subsequent reactor power decrease to 70 percent, the curve will become _____; and the percentage of the core neutron population lost to resonance capture by U-238 will _____.

A. shorter and broader; increase

B. shorter and broader; decrease

C. taller and more narrow; increase

D. taller and more narrow; decrease

ANSWER: D.

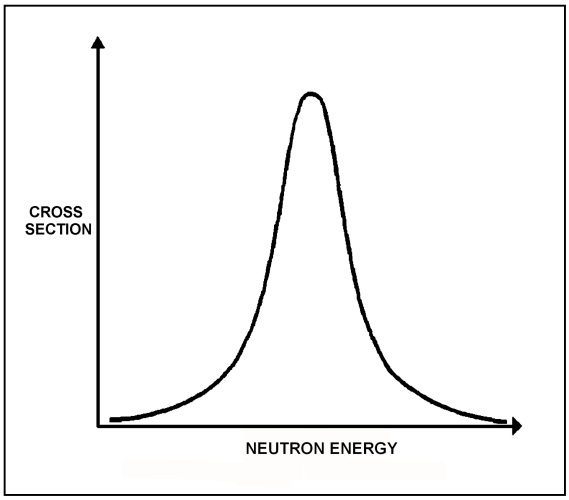

TOPIC: 192004
KNOWLEDGE: K1.07 [2.9/2.9]
QID: P3850 (B3852)

Refer to the curve of microscopic cross section for absorption versus neutron energy for a resonance peak in U-238 in a reactor operating at 80 percent power (see figure below).

If reactor power is decreased to 60 percent, the height of the curve will _____; and the area under the curve will _____.

A. increase; increase

B. increase; remain the same

C. decrease; decrease

D. decrease; remain the same

ANSWER: B.

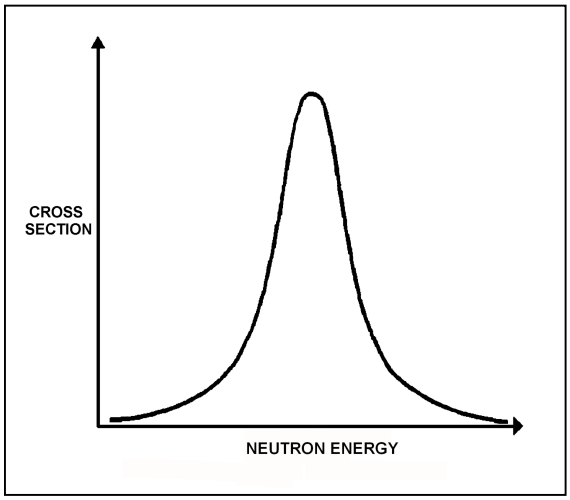

TOPIC: 192004
KNOWLEDGE: K1.07 [2.9/2.9]
QID: P4826 (B4826)

If the average temperature of a fuel pellet decreases by 50°F, the microscopic cross-section for absorption of neutrons at a resonance energy of U-238 will _____; and the microscopic cross-sections for absorption of neutrons at energies that are slightly higher or lower than a U-238 resonance energy will _____.

A. increase; increase

B. increase; decrease

C. decrease; increase

D. decrease; decrease

ANSWER: B.

TOPIC: 192004
KNOWLEDGE: K1.07 [2.9/2.9]
QID: P6626 (B6627)

If the average temperature of a fuel pellet increases by 50°F, the microscopic cross-section for absorption of neutrons at a resonance energy of U-238 will _____; and the microscopic cross-sections for absorption of neutrons at energies that are slightly higher or lower than a U-238 resonance energy will _____.

A. increase; increase

B. increase; decrease

C. decrease; increase

D. decrease; decrease

ANSWER: C.

TOPIC: 192004
KNOWLEDGE: K1.07 [2.9/2.9]
QID: P6926 (B6926)

Which one of the following 10 percent power level changes produces the largest amount of negative reactivity from the fuel temperature coefficient? (Assume that each power level change produces the same increase/decrease in fuel temperature.)

A. 30 percent to 40 percent

B. 30 percent to 20 percent

C. 80 percent to 90 percent

D. 80 percent to 70 percent

ANSWER: A.

TOPIC: 192004
KNOWLEDGE: K1.07 [2.9/2.9]
QID: P7648 (B7648)

Refer to the drawing of a curve showing the neutron absorption cross-section for U-238 at a resonance energy (see figure below). The reactor associated with the curve is operating at 80 percent power.

If reactor power is increased to 90 percent over the next few hours, the curve will become _____; and the percentage of the core neutron population lost to resonance capture by U-238 will _____.

A. shorter and broader; increase

B. shorter and broader; decrease

C. taller and more narrow; increase

D. taller and more narrow; decrease

ANSWER: A.

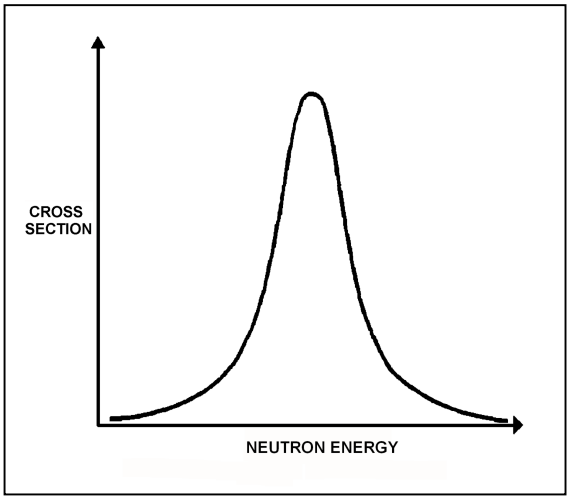

TOPIC: 192004
KNOWLEDGE: K1.07 [2.9/2.9]
QID: P7678 (B7678)

A reactor has an initial effective fuel temperature of 800°F. If the effective fuel temperature increases to 1,000°F, the fuel temperature coefficient will become _____ negative; because at higher effective fuel temperatures, a 1°F increase in effective fuel temperature produces a _____ change in Doppler broadening.

A. less; greater

B. less; smaller

C. more; greater

D. more; smaller

ANSWER: B.

TOPIC: 192004
KNOWLEDGE: K1.08 [3.1/3.1]
QID: P253

Which one of the following groups contain parameters that, if varied, will each have a direct effect on the power coefficient?

A. Control rod position, reactor power, moderator void fraction

B. Moderator temperature, reactor coolant system pressure, xenon-135 concentration

C. Fuel temperature, xenon-135 concentration, control rod position

D. Moderator void fraction, fuel temperature, moderator temperature

ANSWER: D.

TOPIC: 192004
KNOWLEDGE: K1.08 [3.1/3.1]
QID: P652

Which one of the following is responsible for the largest positive reactivity addition following a reactor trip from 100 percent power at the beginning of a fuel cycle? (Assume reactor coolant system parameters stabilize at their normal post-trip values.)

A. Void coefficient

B. Pressure coefficient

C. Fuel temperature coefficient

D. Moderator temperature coefficient

ANSWER: C.

TOPIC: 192004
KNOWLEDGE: K1.08 [3.1/3.1]
QID: P851

A nuclear power plant is initially operating at steady-state 50 percent power. Which one of the following contains only parameters that, if varied, will each directly change the magnitude of the power defect?

A. Control rod position, reactor power, and moderator void fraction

B. Moderator void fraction, fuel temperature, and moderator temperature

C. Fuel temperature, xenon-135 concentration, and control rod position

D. Moderator temperature, reactor coolant system pressure, and xenon-135 concentration

ANSWER: B.

TOPIC: 192004
KNOWLEDGE: K1.08 [3.1/3.1]
QID: P1353

A reactor is initially critical at the point of adding heat during a xenon-free reactor startup near the beginning of a fuel cycle. Reactor power is ramped to 50 percent over a 4 hour period.

During the power increase, most of the positive reactivity added by the operator is necessary to overcome the negative reactivity associated with the...

A. buildup of core xenon-135.

B. increased fuel temperature.

C. burnout of burnable poisons.

D. increased reactor coolant temperature.

ANSWER: B.

TOPIC: 192004
KNOWLEDGE: K1.08 [3.1/3.1]
QID: P1551

A nuclear power plant has been operating at steady-state 50 percent power for one month following a refueling outage. Then, reactor power is ramped to 100 percent over a 2-hour period.

During the power increase, most of the positive reactivity added by the operator is necessary to overcome the negative reactivity associated with the...

A. increased reactor coolant temperature.

B. buildup of core xenon-135.

C. burnout of burnable poisons.

D. increased fuel temperature.

ANSWER: D.

TOPIC: 192004
KNOWLEDGE: K1.09 [2.8/2.9]
QID: P552

As reactor coolant boron concentration decreases, the differential boron worth (ΔK/K/ppm) becomes...

A. less negative, due to a larger number of water molecules in the core.

B. less negative, due to a smaller number of boron molecules in the core.

C. more negative, due to a larger number of water molecules in the core.

D. more negative, due to a smaller number of boron molecules in the core.

ANSWER: D.

TOPIC: 192004
KNOWLEDGE: K1.09 [2.8/2.9]
QID: P1350

With higher concentrations of boron in the reactor coolant, the core neutron flux distribution shifts to _____ energies where the absorption cross section of boron is _____.

A. higher; smaller

B. higher; greater

C. lower; smaller

D. lower; greater

ANSWER: A.

TOPIC: 192004
KNOWLEDGE: K1.10 [2.9/2.9]
QID: P1152

Differential boron worth (ΔK/K/ppm) will become _____ negative as moderator temperature increases because, at higher moderator temperatures, a 1 ppm increase in reactor coolant boron concentration will add _____ boron atoms to the core.

A. more; fewer

B. more; more

C. less; fewer

D. less; more

ANSWER: C.

TOPIC: 192004
KNOWLEDGE: K1.10 [2.9/2.9]
QID: P1252

Differential boron worth (ΔK/K/ppm) becomes more negative as...

A. burnable poisons deplete.

B. boron concentration increases.

C. moderator temperature increases.

D. fission product poison concentration increases.

ANSWER: A.

TOPIC: 192004
KNOWLEDGE: K1.10 [2.9/2.9]
QID: P3552

The following are the initial conditions for a nuclear power plant:

- Reactor power is 50 percent.
- Average reactor coolant temperature is 570°F.
- Reactor coolant boron concentration is 400 ppm.

After a power increase, current plant conditions are as follows:

- Reactor power is 80 percent.
- Average reactor coolant temperature is 582°F.
- Reactor coolant boron concentration is 400 ppm.

Which one of the following describes the current differential boron worth (DBW) in ΔK/K/ppm compared to the initial DBW?

A. The current DBW is more negative because a 1°F increase in reactor coolant temperature will remove more boron-10 atoms from the core.

B. The current DBW is more negative because a 1 ppm increase in reactor coolant boron concentration will add more boron-10 atoms to the core.

C. The current DBW is less negative because a 1°F increase in reactor coolant temperature will remove fewer boron-10 atoms from the core.

D. The current DBW is less negative because a 1 ppm increase in reactor coolant boron concentration will add fewer boron-10 atoms to the core.

ANSWER: D.

TOPIC: 192004
KNOWLEDGE: K1.11 [2.9/3.1]
QID: P351

The amount of boric acid required to increase the reactor coolant boron concentration by 50 ppm at 1,200 ppm is approximately _____ as the amount of boric acid required to increase the reactor coolant boron concentration by 50 ppm at 100 ppm.

A. the same

B. four times as large

C. eight times as large

D. twelve times as large

ANSWER: A.

TOPIC: 192004
KNOWLEDGE: K1.11 [2.9/3.1]
QID: P1050

The amount of pure water required to decrease the reactor coolant boron concentration by 20 ppm at 100 ppm is approximately _____ the amount of pure water required to decrease the reactor coolant boron concentration by 20 ppm at 1,000 ppm.

A. one-tenth

B. the same as

C. 10 times

D. 100 times

ANSWER: C.

TOPIC: 192004
KNOWLEDGE: K1.12 [2.7/2.7]
QID: P52

A reactivity coefficient measures a/an _____ change in reactivity, while a reactivity defect measures a _____ change in reactivity due to a change in the measured parameter.

A. integrated; total

B. integrated; differential

C. unit; total

D. unit; differential

ANSWER: C.

TOPIC: 192004
KNOWLEDGE: K1.12 [2.7/2.7]
QID: P352

Given the following initial parameters:

Reactor coolant boron concentration	=	600 ppm
Moderator temperature coefficient	=	-0.015 %ΔK/K/°F
Differential boron worth	=	-0.010 %ΔK/K/ppm

Which one of the following is the final reactor coolant boron concentration required to <u>decrease</u> average reactor coolant temperature by 4°F. (Assume <u>no</u> change in control rod position or reactor/turbine power).

A. 606 ppm

B. 603 ppm

C. 597 ppm

D. 594 ppm

ANSWER: A.

TOPIC: 192004
KNOWLEDGE: K1.12 [2.7/2.7]
QID: P852

Given the following initial parameters:

Reactor coolant boron concentration	=	500 ppm
Moderator temperature coefficient	=	-0.012 %ΔK/K/°F
Differential boron worth	=	-0.008 %ΔK/K/ppm

Which one of the following is the final reactor coolant boron concentration required to <u>increase</u> average coolant temperature by 6°F. (Assume <u>no</u> change in control rod position or reactor/turbine power.)

A. 491 ppm

B. 496 ppm

C. 504 ppm

D. 509 ppm

ANSWER: A.

TOPIC: 192004
KNOWLEDGE: K1.12 [2.7/2.7]
QID: P953

Given the following initial parameters:

Power coefficient	=	-0.016 %ΔK/K/percent
Differential boron worth	=	-0.010 %ΔK/K/ppm
Control rod worth	=	-0.030 %ΔK/K/inch
Reactor coolant boron concentration	=	500 ppm

Which one of the following is the final reactor coolant boron concentration required to support increasing reactor power from 30 percent to 80 percent by boration/dilution with 10 inches of outward control rod motion. (Ignore any change in fission product poison reactivity.)

A. 390 ppm

B. 420 ppm

C. 450 ppm

D. 470 ppm

ANSWER: C.

TOPIC: 192004
KNOWLEDGE: K1.12 [2.7/2.7]
QID: P1553

A nuclear power plant is operating at steady-state 100 percent power. Given the following initial parameters, select the final reactor coolant boron concentration required to decrease average coolant temperature by 6°F. (Assume no change in control rod position or reactor/turbine power.)

Reactor coolant boron concentration	=	500 ppm
Moderator temperature coefficient	=	-0.012 %ΔK/K/°F
Differential boron worth	=	-0.008 %ΔK/K/ppm

A. 509 ppm

B. 504 ppm

C. 496 ppm

D. 491 ppm

ANSWER: A.

TOPIC: 192004
KNOWLEDGE: K1.12 [2.7/2.7]
QID: P1753

Given the following initial parameters:

Power coefficient	=	-0.020 %ΔK/K/percent
Differential boron worth	=	-0.010 %ΔK/K/ppm
Differential rod worth	=	-0.025 %ΔK/K/inch
Reactor coolant boron concentration	=	500 ppm

Which one of the following is the final reactor coolant boron concentration required to support increasing reactor power from 30 percent to 80 percent by boration/dilution with 10 inches of outward control rod motion? (Ignore any change in fission product poison reactivity.)

A. 425 ppm

B. 450 ppm

C. 550 ppm

D. 575 ppm

ANSWER: A.

TOPIC: 192004
KNOWLEDGE: K1.12 [2.7/2.7]
QID: P2353

Given the following initial parameters:

Power coefficient	=	-0.020 %ΔK/K/percent
Differential boron worth	=	-0.010 %ΔK/K/ppm
Differential rod worth	=	-0.025 %ΔK/K/inch
Reactor coolant boron concentration	=	500 ppm

Which one of the following is the final reactor coolant boron concentration required to support decreasing reactor power from 80 percent to 30 percent by boration/dilution with 10 inches of inward control rod motion? (Ignore any change in fission product poison reactivity.)

A. 425 ppm

B. 475 ppm

C. 525 ppm

D. 575 ppm

ANSWER: D.

TOPIC: 192004
KNOWLEDGE: K1.12 [2.7/2.7]
QID: P2453

Given the following initial parameters:

Power coefficient	=	-0.020 %ΔK/K/percent
Differential boron worth	=	-0.010 %ΔK/K/ppm
Differential rod worth	=	-0.025 %ΔK/K/inch
Reactor coolant boron concentration	=	600 ppm

Which one of the following is the final reactor coolant boron concentration required to support increasing reactor power from 40 percent to 80 percent with 40 inches of outward control rod motion? (Ignore any change in fission product poison reactivity.)

A. 420 ppm

B. 580 ppm

C. 620 ppm

D. 780 ppm

ANSWER: C.

TOPIC: 192004
KNOWLEDGE: K1.12 [2.7/2.7]
QID: P2553

Given the following initial parameters:

Power coefficient	=	-0.020 %ΔK/K/percent
Differential boron worth	=	-0.010 %ΔK/K/ppm
Differential rod worth	=	-0.025 %ΔK/K/inch
Reactor coolant boron concentration	=	500 ppm

Which one of the following is the final reactor coolant boron concentration required to support decreasing reactor power from 100 percent to 30 percent by boration/dilution with 20 inches of inward control rod motion? (Ignore any change in fission product poison reactivity.)

A. 410 ppm

B. 425 ppm

C. 575 ppm

D. 590 ppm

ANSWER: D.

TOPIC: 192004
KNOWLEDGE: K1.12 [2.7/2.7]
QID: P6527

Given the following initial parameters:

Power coefficient	=	-0.020 %ΔK/K/percent
Differential boron worth	=	-0.010 %ΔK/K/ppm
Differential rod worth	=	-0.020 %ΔK/K/inch
Reactor coolant boron concentration	=	600 ppm

Which one of the following is the final reactor coolant boron concentration required to support increasing reactor power from 20 percent to 50 percent with 10 inches of control rod withdrawal? (Ignore any change in fission product poison reactivity.)

A. 520 ppm

B. 560 ppm

C. 640 ppm

D. 680 ppm

ANSWER: B.

TOPIC: 192004
KNOWLEDGE: K1.13 [2.9/2.9]
QID: P2071 (B2070)

Ignoring the effects of changes in fission product poisons, which one of the following power changes requires the greatest amount of positive reactivity addition?

A. 3 percent to 5 percent

B. 5 percent to 15 percent

C. 15 percent to 30 percent

D. 30 percent to 60 percent

ANSWER: D.

TOPIC: 192004
KNOWLEDGE: K1.13 [2.9/2.9]
QID: P2169 (B2669)

Ignoring the effects of changes in fission product poisons, which one of the following power changes requires the smallest amount of positive reactivity addition?

A. 2 percent to 5 percent

B. 5 percent to 15 percent

C. 15 percent to 30 percent

D. 30 percent to 50 percent

ANSWER: A.

TOPIC: 192004
KNOWLEDGE: K1.13 [2.9/2.9]
QID: P2851 (B2470)

Ignoring the effects of changes in fission product poisons, which one of the following power changes requires the greatest amount of positive reactivity addition?

A. 3 percent to 10 percent

B. 10 percent to 25 percent

C. 25 percent to 60 percent

D. 60 percent to 100 percent

ANSWER: D.

TOPIC: 192004
KNOWLEDGE: K1.13 [2.9/2.9]
QID: P2953 (B5034)

Ignoring the effects of changes in fission product poisons, which one of the following reactor power changes requires the greatest amount of positive reactivity addition?

A. 3 percent to 10 percent

B. 10 percent to 25 percent

C. 25 percent to 65 percent

D. 65 percent to 100 percent

ANSWER: C.

TOPIC: 192004
KNOWLEDGE: K1.13 [2.9/2.9]
QID: P3050 (B3051)

A reactor startup is in progress with the reactor at normal operating temperature and pressure. With reactor power stable at the point of adding heat, a control rod malfunction causes an inadvertent rod withdrawal that results in adding 0.3 %ΔK/K reactivity.

Given:

- All control rod motion has been stopped.
- No automatic system or operator actions occur to inhibit the power increase.
- Power coefficient equals -0.04 %ΔK/K/percent.
- The effective delayed neutron fraction equals 0.006.

What is the approximate power level increase required to offset the reactivity added by the inadvertent control rod withdrawal? (Ignore any reactivity effects from changes in fission product poisons.)

A. 3.0 percent

B. 5.0 percent

C. 6.7 percent

D. 7.5 percent

ANSWER: D.

TOPIC: 192004
KNOWLEDGE: K1.13 [2.9/2.9]
QID: P3753 (B3769)

Ignoring the effects of changes in fission product poisons, which one of the following power changes requires the smallest amount of positive reactivity addition?

A. 3 percent to 10 percent

B. 10 percent to 15 percent

C. 15 percent to 30 percent

D. 30 percent to 40 percent

ANSWER: B.

TOPIC: 192004
KNOWLEDGE: K1.13 [2.9/2.9]
QID: P4327 (B4325)

A reactor startup is in progress with the reactor at normal operating temperature and pressure. With reactor power stable at the point of adding heat, a control rod malfunction causes an inadvertent rod withdrawal that results in adding 0.2 %ΔK/K reactivity.

Given:

- All control rod motion has been stopped.
- No automatic system or operator actions occur to inhibit the power increase.
- Power coefficient equals -0.04 %ΔK/K/percent.
- The effective delayed neutron fraction equals 0.006.

What is the approximate reactor power level increase required to offset the reactivity added by the inadvertent control rod withdrawal? (Ignore any reactivity effects from changes in fission product poisons.)

A. 3.3 percent

B. 5.0 percent

C. 6.7 percent

D. 7.5 percent

ANSWER: B.

TOPIC: 192004
KNOWLEDGE: K1.13 [2.9/2.9]
QID: P6727 (B6736)

With reactor power stable at the point of adding heat, a control rod malfunction causes a short rod withdrawal that increases reactivity by 0.14 %ΔK/K.

Given:

- All control rod motion has stopped.
- No automatic system or operator actions occur to inhibit the power increase.
- Power coefficient equals -0.028 %ΔK/K/percent.
- The effective delayed neutron fraction equals 0.006.

What is the approximate power level increase required to offset the reactivity added by the control rod withdrawal? (Ignore any reactivity effects from changes in fission product poisons.)

A. 2.0 percent

B. 5.0 percent

C. 20 percent

D. 50 percent

ANSWER: B.

TOPIC: 192005
KNOWLEDGE: K1.03 [3.5/3.6]
QID: P254

A reactor is initially critical below the point of adding heat (POAH) during a reactor startup. Control rods are withdrawn for 20 seconds to establish a 0.5 dpm startup rate.

In response to the control rod withdrawal, reactor power will increase...

A. continuously until control rods are reinserted.

B. and stabilize at a value slightly below the POAH.

C. temporarily, then stabilize at the original value.

D. and stabilize at a value slightly above the POAH.

ANSWER: D.

TOPIC: 192005
KNOWLEDGE: K1.03 [3.5/3.6]
QID: P354

A reactor is initially critical below the point of adding heat during a reactor startup. If control rods are manually inserted for 5 seconds, reactor power will decrease...

A. to a lower power level determined by subcritical multiplication.

B. temporarily, then return to the original power level due to subcritical multiplication.

C. temporarily, then return to the original power level due to a decrease in moderator temperature.

D. until inherent positive reactivity feedback causes the reactor to become critical at a lower power level.

ANSWER: A.

TOPIC: 192005
KNOWLEDGE: K1.03 [3.5/3.6]
QID: P754 (B755)

A reactor is initially critical below the point of adding heat (POAH) during a reactor startup. If control rods are manually withdrawn for 5 seconds, reactor power will...

A. increase to a stable critical power level below the POAH.

B. increase temporarily, then decrease and stabilize at the original value.

C. increase to a stable critical power level at the POAH.

D. increase temporarily, then decrease and stabilize below the original value.

ANSWER: C.

TOPIC: 192005
KNOWLEDGE: K1.03 [3.5/3.6]
QID: P1054

A reactor is operating at steady-state 50 percent power near the end of a fuel cycle when the operator withdraws a group of control rods for 5 seconds. (Assume main turbine load remains constant and the reactor does <u>not</u> trip.)

In response to the control rod withdrawal, actual reactor power will stabilize _____ the initial power level and reactor coolant temperature will stabilize _____ the initial temperature.

A. at; at

B. at; above

C. above; at

D. above; above

ANSWER: B.

TOPIC: 192005
KNOWLEDGE: K1.03 [3.5/3.6]
QID: P1254

A reactor is operating at steady-state 50 percent power when control rods are inserted a short distance. Assume that main turbine-generator load remains constant and the reactor does not trip.

In response to the control rod insertion, reactor power will initially decrease, and then…

A. stabilize in the source range.

B. stabilize at a lower value in the power range.

C. increase and stabilize above the original value.

D. increase and stabilize at the original value.

ANSWER: D.

TOPIC: 192005
KNOWLEDGE: K1.03 [3.5/3.6]
QID: P1654

A reactor is operating at steady-state 50 percent power near the end of core life when the operator inserts a group of control rods for 5 seconds. Assume turbine load remains constant and the reactor does not trip.

In response to the control rod insertion, reactor power will stabilize _____ the initial power level and reactor coolant temperature will stabilize _____ the initial temperature.

A. at; at

B. at; below

C. below; at

D. below; below

ANSWER: B.

TOPIC: 192005
KNOWLEDGE: K1.03 [3.5/3.6]
QID: P1854 (B2155)

A reactor has been shut down for three weeks with all control rods fully inserted. If a single control rod is fully withdrawn from the core, neutron flux level will… (Assume the reactor remains subcritical.)

A. increase and stabilize above the original level.

B. increase, then decrease and stabilize at the original level.

C. increase, then decrease and stabilize above the original level.

D. remain the same during and after the withdrawal.

ANSWER: A.

TOPIC: 192005
KNOWLEDGE: K1.03 [3.5/3.6]
QID: P1955 (B954)

A reactor has been shut down for three weeks with all control rods fully inserted. If a center control rod is fully withdrawn from the core, neutron flux level will… (Assume the reactor remains subcritical.)

A. remain the same.

B. increase and stabilize at a new higher level.

C. increase temporarily then return to the original level.

D. increase exponentially until the operator reinserts the center control rod.

ANSWER: B.

TOPIC: 192005
KNOWLEDGE: K1.03 [3.5/3.6]
QID: P3854

Criticality has been achieved during a xenon-free reactor startup. The core neutron flux level is low in the intermediate range with a stable 0.5 dpm startup rate (SUR). The operator begins inserting control rods in an effort to stabilize the core neutron flux level near its current value. The operator stops inserting control rods when the SUR indicates exactly 0.0 dpm.

Immediately after the operator stops inserting the control rods, the SUR will become _____; and the core neutron flux level will _____.

A. positive; increase exponentially

B. positive; increase linearly

C. negative; decrease exponentially

D. negative; decrease linearly

ANSWER: A.

TOPIC: 192005
KNOWLEDGE: K1.05 [2.8/3.1]
QID: P555 (B856)

The total amount of reactivity added by a control rod position change from a reference height to any other rod height is called...

A. differential rod worth.

B. excess reactivity.

C. integral rod worth.

D. reference reactivity.

ANSWER: C.

TOPIC: 192005
KNOWLEDGE: K1.05 [2.8/3.1]
QID: P654

Integral control rod worth can be described as the change in _____ for a _____ change in rod position.

A. reactor power; total

B. reactivity; unit

C. reactor power; unit

D. reactivity; total

ANSWER: D.

TOPIC: 192005
KNOWLEDGE: K1.05 [2.8/3.1]
QID: P755 (B756)

A control rod is positioned in a reactor with the following neutron flux parameters:

Core average thermal neutron flux = 1×10^{12} neutrons/cm^2-sec
Control rod tip thermal neutron flux = 5×10^{12} neutrons/cm^2-sec

If the control rod is slightly withdrawn such that the tip of the control rod is located in a thermal neutron flux of 1×10^{13} neutrons/cm^2-sec, the differential control rod worth will increase by a factor of _____. (Assume the core average thermal neutron flux is constant.)

A. 0.5

B. 1.4

C. 2.0

D. 4.0

ANSWER: D.

TOPIC: 192005
KNOWLEDGE: K1.05 [2.8/3.1]
QID: P1354

Integral rod worth is the...

A. change in reactivity per unit change in control rod position.

B. rod worth associated with the most reactive control rod.

C. change in worth of a control rod per unit change in reactor power.

D. reactivity added by moving a control rod from one position to another position.

ANSWER: D.

TOPIC: 192005
KNOWLEDGE: K1.05 [2.8/3.1]
QID: P1471

Reactor power was ramped from 80 percent power to 100 percent power over 4 hours. The 80 percent conditions were as follows:

Reactor coolant system (RCS) boron concentration	=	600 ppm
Control rod position	=	110 inches
RCS average temperature	=	575°F

The 100 percent conditions are as follows:

RCS boron concentration	=	580 ppm
Control rod position	=	130 inches
RCS average temperature	=	580°F

Given the following reactivity coefficient/worth values, and ignoring fission product poison reactivity changes, what was the average differential control rod worth during the power change?

Power coefficient	=	-0.03 %ΔK/K/percent
Moderator temperature coefficient	=	-0.02 %ΔK/K/°F
Differential boron worth	=	-0.01 %ΔK/K/ppm

A. -0.02 %ΔK/K/inch

B. -0.025 %ΔK/K/inch

C. -0.04 %ΔK/K/inch

D. -0.05 %ΔK/K/inch

ANSWER: A.

TOPIC: 192005
KNOWLEDGE: K1.05 [2.8/3.1]
QID: P1554 (B1057)

A control rod is positioned in a reactor with the following neutron flux parameters:

Core average thermal neutron flux = 1.0×10^{12} n/cm^2-sec
Control rod tip thermal neutron flux = 5.0×10^{12} n/cm^2-sec

If the control rod is slightly inserted such that the control rod tip is located in a thermal neutron flux of 1.0×10^{13} n/cm^2-sec, the differential control rod worth will increase by a factor of _____. (Assume the core average thermal neutron flux is constant.)

A. 2

B. 4

C. 10

D. 100

ANSWER: B.

TOPIC: 192005
KNOWLEDGE: K1.05 [2.8/3.1]
QID: P1755 (B1855)

A control rod is positioned in a reactor with the following neutron flux parameters:

Core average thermal neutron flux = 1.0×10^{12} n/cm^2-sec
Control rod tip thermal neutron flux = 4.0×10^{12} n/cm^2-sec

If the control rod is slightly inserted such that the control rod tip is located in a thermal neutron flux of 1.2×10^{13} n/cm^2-sec, the differential control rod worth will increase by a factor of _____. (Assume the core average thermal neutron flux is constant.)

A. 1/3

B. 3

C. 9

D. 27

ANSWER: C.

TOPIC: 192005
KNOWLEDGE: K1.05 [2.8/3.1]
QID: P2255

A reactor is initially operating at steady state 70 percent power with the following conditions:

Reactor coolant system (RCS) boron concentration	=	600 ppm
Control rod position	=	110 inches
RCS average temperature	=	575°F

Reactor power is increased to 100 percent. The 100 percent reactor power conditions are as follows:

RCS boron concentration	=	590 ppm
Control rod position	=	130 inches
RCS average temperature	=	580°F

Given the following reactivity coefficient/worth values, and ignoring fission product poison reactivity changes, what was the average differential control rod worth during the power change?

Power coefficient	=	-0.03 %ΔK/K/percent
Moderator temperature coefficient	=	-0.02 %ΔK/K/°F
Differential boron worth	=	-0.01 %ΔK/K/ppm

A. -0.02 %ΔK/K/inch

B. -0.025 %ΔK/K/inch

C. -0.04 %ΔK/K/inch

D. -0.05 %ΔK/K/inch

ANSWER: C.

TOPIC: 192005
KNOWLEDGE: K1.05 [2.8/3.1]
QID: P2554 (B2655)

A control rod is positioned in a reactor with the following neutron flux parameters:

Core average thermal neutron flux = 1.0×10^{12} n/cm^2-sec
Control rod tip thermal neutron flux = 4.0×10^{12} n/cm^2-sec

If the control rod is slightly inserted such that the control rod tip is located in a thermal neutron flux of 1.6×10^{13} n/cm^2-sec, the differential control rod worth will increase by a factor of _____. (Assume the core average thermal neutron flux is constant.)

A. 2

B. 4

C. 8

D. 16

ANSWER: D.

TOPIC: 192005
KNOWLEDGE: K1.06 [2.6/2.9]
QID: P134 (B1755)

Which one of the following expresses the relationship between differential rod worth (DRW) and integral rod worth (IRW)?

A. DRW is the area under the IRW curve at a given rod position.

B. DRW is the slope of the IRW curve at a given rod position.

C. DRW is the IRW at a given rod position.

D. DRW is the square root of the IRW at a given rod position.

ANSWER: B.

TOPIC: 192005
KNOWLEDGE: K1.06 [2.6/2.9]
QID: P655 (B2255)

Which one of the following parameters typically has the greatest influence on the shape of a differential rod worth curve?

A. Core radial neutron flux distribution

B. Core axial neutron flux distribution

C. Core xenon distribution

D. Burnable poison distribution

ANSWER: B.

TOPIC: 192005
KNOWLEDGE: K1.06 [2.6/2.9]
QID: P856

During normal full power operation, the differential control rod worth is less negative at the top and bottom of the core compared to the center regions due to the effects of...

A. reactor coolant boron concentration.

B. neutron flux distribution.

C. xenon concentration.

D. fuel temperature distribution.

ANSWER: B.

TOPIC: 192005
KNOWLEDGE: K1.06 [2.6/2.9]
QID: P1555 (B1657)

Which one of the following expresses the relationship between differential rod worth (DRW) and integral rod worth (IRW)?

A. IRW is the slope of the DRW curve.

B. IRW is the inverse of the DRW curve.

C. IRW is the sum of the DRWs between the initial and final control rod positions.

D. IRW is the sum of the DRWs of all control rods at a specific control rod position.

ANSWER: C.

TOPIC: 192005
KNOWLEDGE: K1.07 [2.5/2.8]
QID: P54

As moderator temperature increases, the differential rod worth becomes more negative because...

A. moderator density decreases, which causes more neutron leakage out of the core.

B. the moderator temperature coefficient decreases, which causes decreased competition for neutrons.

C. fuel temperature also increases, which decreases the rate of neutron absorption in the fuel.

D. moderator density decreases, which increases the neutron migration length.

ANSWER: D.

TOPIC: 192005
KNOWLEDGE: K1.07 [2.5/2.8]
QID: P454

Differential rod worth will become most negative if reactor coolant temperature is _____ and reactor coolant boron concentration is _____.

A. increased; decreased

B. decreased; decreased

C. increased; increased

D. decreased; increased

ANSWER: A.

TOPIC: 192005
KNOWLEDGE: K1.07 [2.5/2.8]
QID: P955

With a nuclear power plant operating normally at full power, a 5°F decrease in moderator temperature will cause the differential control rod worth to become...

A. more negative due to better moderation of neutrons.

B. less negative due to shorter neutron migration length.

C. more negative due to increased neutron absorption in the moderator.

D. less negative due to increased resonance absorption of neutrons.

ANSWER: B.

TOPIC: 192005
KNOWLEDGE: K1.07 [2.5/2.8]
QID: P1556 (B2656)

As moderator temperature increases, the differential rod worth becomes...

A. more negative due to longer neutron diffusion lengths.

B. more negative due to decreased resonance absorption of neutrons.

C. less negative due to reduced moderation of neutrons.

D. less negative due to decreased moderator absorption of neutrons.

ANSWER: A.

TOPIC: 192005
KNOWLEDGE: K1.07 [2.5/2.8]
QID: P2156

A reactor is operating at 60 percent power near the end of a fuel cycle with the controlling group of control rods inserted 5 percent into the core. Which one of the following will cause group differential rod worth to become <u>less</u> negative? (Consider only the direct effect of the indicated change.)

A. Burnable poison rods become increasingly depleted.

B. Core Xe-135 concentration decreases toward an equilibrium value.

C. Reactor coolant temperature is allowed to decrease from 575°F to 570°F.

D. The group of control rods is inserted an additional 0.5 percent.

ANSWER: C.

TOPIC: 192005
KNOWLEDGE: K1.07 [2.5/2.8]
QID: P2356

A reactor startup is in progress from a cold shutdown condition. During the reactor coolant heatup phase of the startup, differential control rod worth becomes _____ negative; and during the complete withdrawal of the initial bank of control rods, differential control rod worth becomes _____.

A. more; more negative initially and then less negative

B. more; less negative initially and then more negative

C. less; more negative during the entire withdrawal

D. less; less negative during the entire withdrawal

ANSWER: A.

TOPIC: 192005
KNOWLEDGE: K1.07 [2.5/2.8]
QID: P2655

Which one of the following will cause the differential rod worth for a group of control rods to become less negative? (Consider only the direct effect of the initiated change.)

A. During long-term full power operation, fuel temperature decreases as the fuel pellets come into contact with the fuel clad.

B. The reactor coolant system is cooled from 170°F to 120°F in preparation for refueling.

C. Core xenon-135 builds up in the lower half of the core.

D. During the fuel cycle, the quantity of burnable poisons decreases.

ANSWER: B.

TOPIC: 192005
KNOWLEDGE: K1.08 [2.7/2.9]
QID: P857 (B3356)

The main reason for designing and operating a reactor with a flattened neutron flux distribution is to...

A. provide even burnup of control rods.

B. reduce neutron leakage from the core.

C. achieve a higher average power density.

D. provide more accurate nuclear power indication.

ANSWER: C.

TOPIC: 192005
KNOWLEDGE: K1.08 [2.7/2.9]
QID: P2456 (B2457)

Which one of the following is a reason for neutron flux shaping in a reactor core?

A. To minimize local power peaking by more evenly distributing the core thermal neutron flux.

B. To reduce thermal neutron leakage by decreasing the neutron flux at the periphery of the reactor core.

C. To reduce the size and number of control rods needed to shut down the reactor during a reactor trip.

D. To increase differential control rod worth by peaking the thermal neutron flux at the top of the reactor core.

ANSWER: A.

TOPIC: 192005
KNOWLEDGE: K1.09 [2.8/3.0]
QID: P55

Which one of the following includes two reasons for control rod bank/group overlap?

A. Provides a more uniform differential rod worth, and minimizes axial neutron flux peaking.

B. Provides a more uniform differential rod worth, and allows dampening of xenon-induced neutron flux oscillations.

C. Ensures that all rods remain within the allowable tolerance between their individual position indicators and their group counters, and ensures rod insertion limits are not exceeded.

D. Ensures that all rods remain within their allowable tolerance between individual position indicators and their group counters, and provides a more uniform axial flux distribution.

ANSWER: A.

TOPIC: 192005
KNOWLEDGE: K1.09 [2.8/3.0]
QID: P656

Which one of the following includes two reasons for control rod bank/group overlap?

A. Provide a more uniform axial power distribution and provide a more uniform differential rod worth.

B. Provide a more uniform differential rod worth and provide a more uniform radial power distribution.

C. Provide a more uniform radial power distribution and maintain individual and group rod position indicators within allowable tolerances.

D. Maintain individual and group rod position indicators within allowable tolerances and provide a more uniform axial power distribution.

ANSWER: A.

TOPIC: 192005
KNOWLEDGE: K1.09 [2.8/3.0]
QID: P1156

One purpose of using control rod bank/group overlap is to...

A. ensure adequate shutdown margin.

B. provide a more uniform differential rod worth.

C. allow dampening of xenon-induced neutron flux oscillations.

D. ensure control rod insertion limits are not exceeded.

ANSWER: B.

TOPIC: 192005
KNOWLEDGE: K1.10 [3.0/3.3]
QID: P455

A reactor has been operating at 100 percent power for several weeks near the middle of a fuel cycle with all control rods fully withdrawn. Which one of the following describes why most of the power is being produced in the lower half of the reactor core?

A. Xenon-135 concentration is lower in the lower half of the core.

B. The moderator to fuel ratio is lower in the lower half of the core.

C. The fuel loading in the lower half of the core contains a higher uranium-235 enrichment.

D. The moderator temperature coefficient of reactivity is adding less negative reactivity in the lower half of the core.

ANSWER: D.

TOPIC: 192005
KNOWLEDGE: K1.10 [3.0/3.3]
QID: P1357

A reactor is operating at steady-state 75 percent power in the middle of a fuel cycle. Which one of the following actions will cause the greatest shift in reactor power distribution toward the top of the core? (Assume control rods remain fully withdrawn.)

A. Decrease reactor power by 25 percent.

B. Decrease reactor coolant boron concentration by 10 ppm.

C. Decrease average reactor coolant temperature by 5°F.

D. Decrease reactor coolant system operating pressure by 15 psia.

ANSWER: A.

TOPIC: 192005
KNOWLEDGE: K1.10 [3.0/3.3]
QID: P2656

A reactor has been operating at 100 percent power for three weeks shortly after a refueling outage. All control rods are fully withdrawn. Which one of the following describes why most of the power is being produced in the lower half of the core?

A. The fuel loading in the lower half of the core contains a higher U-235 enrichment.

B. Reactor coolant boron is adding more negative reactivity in the upper half of the core.

C. There is a greater concentration of Xe-135 in the upper half of the core.

D. The moderator temperature coefficient of reactivity is adding more negative reactivity in the upper half of the core.

ANSWER: D.

TOPIC: 192005
KNOWLEDGE: K1.11 [2.8/3.2]
QID: P1157

If core quadrant power distribution (sometimes called quadrant power tilt or azimuthal tilt) is maintained within design limits, which one of the following conditions is most likely?

A. Axial power distribution is within design limits.

B. Radial power distribution is within design limits.

C. Nuclear instrumentation is indicating within design accuracy.

D. Departure from nucleate boiling ratio is within design limits.

ANSWER: B.

TOPIC: 192005
KNOWLEDGE: K1.12 [2.9/3.1]
QID: P256

A reactor has been restarted following a refueling outage and is currently at the point of adding heat. Which one of the following describes the change in core axial power distribution as reactor power is increased to five percent by control rod withdrawal?

A. Shifts toward the bottom of the core.

B. Shifts toward the top of the core.

C. Shifts away from the center toward the top and bottom of the core.

D. Shifts away from the top and bottom toward the center of the core.

ANSWER: B.

TOPIC: 192005
KNOWLEDGE: K1.12 [2.9/3.1]
QID: P355

By maintaining the radial and axial core power distributions within their prescribed limits, the operator is assured that _____ will remain within acceptable limits.

A. power density (kW/foot) and departure from nucleate boiling ratio (DNBR)

B. DNBR and shutdown margin

C. core delta-T and power density (kW/foot)

D. shutdown margin and core delta-T

ANSWER: A.

TOPIC: 192005
KNOWLEDGE: K1.13 [2.8/3.2]
QID: P3156

Consider a reactor core with four quadrants: A, B, C, and D. The reactor is operating at steady-state 90 percent power when a fully withdrawn control rod in quadrant C drops to the bottom of the core. Assume that no operator actions are taken and reactor power stabilizes at 88 percent.

How are the maximum upper and lower core power tilt values (sometimes called quadrant power tilt ratio or azimuthal power tilt) affected by the dropped rod?

A. Upper core value decreases while lower core value increases.

B. Upper core value increases while lower core value decreases.

C. Both upper and lower core values decrease.

D. Both upper and lower core values increase.

ANSWER: D.

TOPIC: 192005
KNOWLEDGE: K1.14 [3.2/3.5]
QID: P356 (B358)

A reactor is operating at steady-state 100 percent power when a single control rod fully inserts from the fully withdrawn position. After the initial transient, the operator returns the reactor to 100 percent power with the control rod still fully inserted.

Compared to the initial axial neutron flux shape, the current axial neutron flux shape will have a...

A. minor distortion, because a fully inserted control rod has zero reactivity worth.

B. minor distortion, because the fully inserted control rod is an axially uniform poison.

C. major distortion, because the upper and lower core halves are loosely coupled.

D. major distortion, because power production along the length of the rod drastically decreases.

ANSWER: B.

TOPIC: 192005
KNOWLEDGE: K1.14 [3.2/3.5]
QID: P956

After a control rod is fully inserted (from the fully withdrawn position), the effect on the axial flux shape is minimal. This is because...

A. the differential rod worth is constant along the length of the control rod.

B. the fully inserted control rod is an axially uniform poison.

C. a control rod only has reactivity worth if it is moving.

D. a variable poison distribution exists throughout the length of the control rod.

ANSWER: B.

TOPIC: 192005
KNOWLEDGE: K1.15 [3.4/3.9]
QID: P57

Why do the control rod insertion limits generally rise as reactor power increases?

A. Power defect increases as power increases.

B. Control rod worth decreases as power increases.

C. Fuel temperature coefficient decreases as power increases.

D. Equilibrium xenon-135 negative reactivity increases as power increases.

ANSWER: A.

TOPIC: 192005
KNOWLEDGE: K1.15 [3.4/3.9]
QID: P1055

Control rod insertion limits are established for power operation because excessive rod insertion will...

A. adversely affect core power distribution.

B. generate excessive liquid waste due to dilution.

C. cause reduced control rod lifetime.

D. cause unacceptable fast and thermal neutron leakage.

ANSWER: A.

TOPIC: 192005
KNOWLEDGE: K1.15 [3.4/3.9]
QID: P1456

Control rod insertion limits ensure that control rods will be more withdrawn as reactor power _____ to compensate for the change in _____.

A. increases; xenon reactivity

B. decreases; xenon reactivity

C. increases; power defect

D. decreases; power defect

ANSWER: C.

TOPIC: 192005
KNOWLEDGE: K1.15 [3.4/3.9]
QID: P1757

Why are control rod insertion limits established for power operation?

A. To minimize the worth of a dropped control rod.

B. To maintain a negative moderator temperature coefficient.

C. To provide adequate shutdown margin after a reactor trip.

D. To ensure sufficient positive reactivity is available to compensate for the existing power defect.

ANSWER: C.

TOPIC: 192005
KNOWLEDGE: K1.16 [2.8/3.1]
QID: P557

A reactor has been operating at 80 percent power for four weeks with the controlling rod bank/ group inserted 10 percent from the fully withdrawn position.

Which one of the following will be most affected by inserting the controlling bank/group an additional 5 percent? (Assume steady-state reactor power does not change.)

A. Total xenon-135 reactivity

B. Radial power distribution

C. Quadrant (azimuthal) power distribution

D. Axial power distribution

ANSWER: D.

TOPIC: 192005
KNOWLEDGE: K1.16 [2.8/3.1]
QID: P1457

A reactor is operating at steady-state 75 percent power with all control rods fully withdrawn. Assuming the reactor does not trip, which one of the following compares the effects of dropping (full insertion) a center control rod to the effects of partially inserting (50 percent) the same control rod?

A. A dropped rod causes a greater change in shutdown margin.

B. A dropped rod causes a smaller change in shutdown margin.

C. A dropped rod causes a greater change in axial power distribution.

D. A dropped rod causes a greater change in radial power distribution.

ANSWER: D.

TOPIC: 192005
KNOWLEDGE: K1.16 [2.8/3.1]
QID: P1657

A reactor is operating at steady-state 75 percent power with all control rods fully withdrawn. Assuming the reactor does not trip, which one of the following compares the effects of dropping (full insertion) a center control rod to the effects of partially inserting (50 percent) the same control rod?

A. A partially inserted rod causes a greater change in axial power distribution.

B. A partially inserted rod causes a greater change in radial power distribution.

C. A partially inserted rod causes a greater change in shutdown margin.

D. A partially inserted rod causes a smaller change in shutdown margin.

ANSWER: A.

TOPIC: 192005
KNOWLEDGE: K1.16 [2.8/3.1]
QID: P2157

A reactor is operating at steady-state 75 percent power with all control rods fully withdrawn. Assuming the reactor power does not trip, which one of the following compares the effects of dropping (full insertion) a center control rod to the effects of partially inserting (50 percent) the same control rod?

A. A dropped rod causes a smaller change in axial power distribution.

B. A dropped rod causes a smaller change in radial power distribution.

C. A dropped rod causes a smaller change in shutdown margin.

D. A dropped rod causes a greater change in shutdown margin.

ANSWER: A.

TOPIC: 192005
KNOWLEDGE: K1.16 [2.8/3.1]
QID: P2257

A reactor is operating at steady-state 85 percent power with all control rods fully withdrawn. Assuming the reactor does not trip, which one of the following compares the effects of partially inserting (50 percent) a center control rod to the effects of dropping (full insertion) the same control rod?

A. A partially inserted rod causes a smaller change in axial power distribution.

B. A partially inserted rod causes a smaller change in radial power distribution.

C. A partially inserted rod causes a greater change in shutdown margin.

D. A partially inserted rod causes a smaller change in shutdown margin.

ANSWER: B.

TOPIC: 192005
KNOWLEDGE: K1.16 [2.8/3.1]
QID: P2457

A reactor is operating at steady-state 100 percent power at the beginning of a fuel cycle with all control rods fully withdrawn. Assuming the reactor does not trip, which one of the following compares the effects of dropping a control rod in the center of the core to dropping an identical control rod at the periphery of the core?

A. Dropping a center control rod causes a greater change in shutdown margin.

B. Dropping a center control rod causes a smaller change in shutdown margin.

C. Dropping a center control rod causes a greater change in axial power distribution.

D. Dropping a center control rod causes a greater change in radial power distribution.

ANSWER: D.

TOPIC: 192005
KNOWLEDGE: K1.16 [2.8/3.1]
QID: P2556

A reactor has been operating at 80 percent power for four weeks with the controlling rod group inserted 15 percent from the fully withdrawn position.

Which one of the following will be significantly affected by withdrawing the controlling rod group an additional 5 percent? (Assume steady-state reactor power does not change.)

A. Total xenon-135 reactivity

B. Axial power distribution

C. Radial power distribution

D. Quadrant (azimuthal) power distribution

ANSWER: B.

TOPIC: 192005
KNOWLEDGE: K1.16 [2.8/3.1]
QID: P2857

A reactor is operating at steady-state 100 percent power with all control rods fully withdrawn when one control rod at the core periphery falls completely into the core. Assuming no reactor trip and no operator action, which one of the following will change significantly as a result of the dropped rod?

A. Axial power distribution only.

B. Axial power distribution and shutdown margin.

C. Radial power distribution only.

D. Radial power distribution and shutdown margin.

ANSWER: C.

TOPIC: 192006
KNOWLEDGE: K1.01 [2.5/2.6]
QID: P58

Fission products that have large microscopic cross sections for capture of thermal neutrons are called...

A. breeder fuels.

B. burnable poisons.

C. fissionable fuels.

D. reactor poisons.

ANSWER: D.

TOPIC: 192006
KNOWLEDGE: K1.01 [2.5/2.6]
QID: P858 (B1858)

Fission product poisons can be differentiated from other fission products in that fission product poisons...

A. have a longer half-life.

B. are stronger absorbers of thermal neutrons.

C. are produced in a larger percentage of fissions.

D. have a higher fission cross section for thermal neutrons.

ANSWER: B.

TOPIC: 192006
KNOWLEDGE: K1.01 [2.5/2.6]
QID: P2058 (B2061)

A fission product poison can be differentiated from all other fission products in that a fission product poison will...

A. be produced in direct proportion to the fission rate in the core.

B. remain radioactive for thousands of years after the final reactor criticality.

C. depress the power production in some core locations and cause peaking in others.

D. migrate out of the fuel pellets and into the reactor coolant via pinhole defects in the clad.

ANSWER: C.

TOPIC: 192006
KNOWLEDGE: K1.01 [2.5/2.6]
QID: P2158

A fission product poison can be differentiated from all other fission products in that a fission product poison...

A. will be radioactive for thousands of years.

B. is produced in a relatively large percentage of thermal fissions.

C. has a relatively high probability of absorbing a fission neutron.

D. is formed as a gas and is contained within the fuel pellets and fuel rods.

ANSWER: C.

TOPIC: 192006
KNOWLEDGE: K1.01 [2.5/2.6]
QID: P2858 (B1558)

A fission product poison can be differentiated from all other fission products because a fission product poison...

A. has a higher microscopic cross section for thermal neutron capture.

B. has a longer half-life.

C. is produced in a greater percentage of thermal fissions.

D. is formed as a gas and is contained in the fuel pellets.

ANSWER: A.

TOPIC: 192006
KNOWLEDGE: K1.02 [3.0/1.1]
QID: P658

Xenon-135 is considered a major fission product poison because it has a large...

A. fission cross section.

B. absorption cross section.

C. elastic scatter cross section.

D. inelastic scatter cross section.

ANSWER: B.

TOPIC: 192006
KNOWLEDGE: K1.02 [3.0/1.1]
QID: P1858 (B1058)

Which one of the following is a characteristic of xenon-135?

A. Thermal neutron flux level affects both the production and removal of xenon-135.

B. Thermal neutrons interact with xenon-135 primarily through scattering reactions.

C. Xenon-135 is primarily a resonance absorber of epithermal neutrons.

D. Xenon-135 is produced from the radioactive decay of barium-135.

ANSWER: A.

TOPIC: 192006
KNOWLEDGE: K1.02 [3.0/1.1]
QID: P2458 (B1658)

Which one of the following has the greatest microscopic cross section for absorption of a thermal neutron?

A. Uranium-235

B. Boron-10

C. Samarium-149

D. Xenon-135

ANSWER: D.

TOPIC: 192006
KNOWLEDGE: K1.02 [3.0/1.1]
QID: P2658 (B256)

Compared to other poisons in the core, the two characteristics that cause xenon-135 to be a major reactor poison are its relatively _____ absorption cross section and its relatively _____ variation in concentration for large reactor power changes.

A. small; large

B. small; small

C. large; small

D. large; large

ANSWER: D.

TOPIC: 192006
KNOWLEDGE: K1.03 [2.7/2.8]
QID: P59

Immediately after a reactor trip from sustained high power operation, xenon-135 concentration in the reactor will...

A. increase, due to the decay of iodine-135.

B. decrease, because xenon-135 production from fission has stopped.

C. remain the same, because the decay of iodine-135 and xenon-135 balance each other out.

D. decrease initially, and then slowly increase due to the differences in the half-lives of iodine-135 and xenon-135.

ANSWER: A.

TOPIC: 192006
KNOWLEDGE: K1.03 [2.7/2.8]
QID: P358 (B362)

Xenon-135 is produced in a reactor by two primary methods. One is directly from fission; the other is from the decay of...

A. cesium-135.

B. iodine-135.

C. xenon-136.

D. iodine-136.

ANSWER: B.

TOPIC: 192006
KNOWLEDGE: K1.03 [2.7/2.8]
QID: P1359 (B458)

A reactor has been operating at full power for several weeks. Xenon-135 is being directly produced as a fission product in approximately _____ percent of all fissions.

A. 100

B. 30

C. 3

D. 0.3

ANSWER: D.

TOPIC: 192006
KNOWLEDGE: K1.03 [2.7/2.8]
QID: P1559 (B859)

Which one of the following correctly describes the production mechanisms of xenon-135 in a reactor that is operating at steady-state 100 percent power?

A. Primarily from fission, secondarily from iodine decay

B. Primarily from fission, secondarily from promethium decay

C. Primarily from iodine decay, secondarily from fission

D. Primarily from promethium decay, secondarily from fission

ANSWER: C.

TOPIC: 192006
KNOWLEDGE: K1.03 [2.7/2.8]
QID: P1859 (B257)

What is the major contributor to the production of Xe-135 in a reactor that has been operating at full power for two weeks?

A. Radioactive decay of I-135.

B. Radioactive decay of Cs-135.

C. Direct production from fission of U-235.

D. Direct production from fission of U-238.

ANSWER: A.

TOPIC: 192006
KNOWLEDGE: K1.04 [2.8/2.8]
QID: P60

One hour after a reactor trip from sustained 100 percent power operation, the xenon-135 removal process consists primarily of...

A. beta decay.

B. gamma decay.

C. neutron capture.

D. gamma capture.

ANSWER: A.

TOPIC: 192006
KNOWLEDGE: K1.04 [2.8/2.8]
QID: P460 (B462)

Reactor power is increased from 50 percent to 60 percent in one hour. What is the most significant contributor to the initial change in xenon-135 reactivity?

A. Production of xenon-135 from fission.

B. Production of xenon-135 from iodine-135 decay.

C. Loss of xenon-135 due to absorption of neutrons.

D. Loss of xenon-135 due to decay to cesium-135.

ANSWER: C.

TOPIC: 192006
KNOWLEDGE: K1.04 [2.8/2.8]
QID: P859

In a shut down reactor, which decay chain describes the primary means of removing xenon-135?

A. $^{135}Xe \xrightarrow{\beta^-} {}^{135}Cs$

B. $^{135}Xe \xrightarrow{n} {}^{134}Xe$

C. $^{135}Xe \xrightarrow{\alpha} {}^{131}Te$

D. $^{135}Xe \xrightarrow{\beta^+} {}^{131}I$

ANSWER: A.

TOPIC: 192006
KNOWLEDGE: K1.04 [2.8/2.8]
QID: P1059 (B359)

Xenon-135 undergoes radioactive decay to...

A. iodine-135.

B. cesium-135.

C. tellurium-135.

D. lanthanum-135.

ANSWER: B.

TOPIC: 192006
KNOWLEDGE: K1.05 [2.8/2.8]
QID: P2558 (B2558)

Reactors A and B are operating at steady-state 100 percent power with equilibrium xenon-135. The reactors are identical except that reactor A is operating near the end of a fuel cycle (EOC) and reactor B is operating near the beginning of a fuel cycle (BOC).

Which reactor has the greater concentration of xenon-135, and why?

A. Reactor A (EOC), due to the smaller 100 percent power thermal neutron flux.

B. Reactor A (EOC), due to the larger 100 percent power thermal neutron flux.

C. Reactor B (BOC), due to the smaller 100 percent power thermal neutron flux.

D. Reactor B (BOC), due to the larger 100 percent power thermal neutron flux.

ANSWER: C.

TOPIC: 192006
KNOWLEDGE: K1.04 [2.8/2.8]
QID: P2659 (B3358)

A nuclear power plant has been operating at 100 percent power for several months. Which one of the following describes the relative contributions of beta decay and neutron capture to xenon-135 removal from the reactor?

A. Primary is neutron capture; secondary is beta decay.

B. Primary is beta decay; secondary is neutron capture.

C. Beta decay and neutron capture contribute equally.

D. Not enough information is given to make a comparison.

ANSWER: A.

TOPIC: 192006
KNOWLEDGE: K1.05 [3.1/3.1]
QID: P61 (B58)

A reactor was operating at 50 percent power for one week when power was ramped to 100 percent. Which one of the following describes the equilibrium xenon-135 concentration at 100 percent power?

A. Twice the 50 percent power concentration.

B. Less than twice the 50 percent power concentration.

C. More than twice the 50 percent power concentration.

D. Remains the same, because it is independent of power.

ANSWER: B.

TOPIC: 192006
KNOWLEDGE: K1.05 [3.1/3.1]
QID: P660 (B658)

A reactor was operating at 100 percent power for one week when power was decreased to 50 percent. Which one of the following describes the equilibrium xenon-135 concentration at 50 percent power?

A. The same as the 100 percent concentration.

B. More than one-half the 100 percent concentration.

C. One-half the 100 percent concentration.

D. Less than one-half the 100 percent concentration.

ANSWER: B.

TOPIC: 192006
KNOWLEDGE: K1.05 [3.1/3.1]
QID: P1158 (B1160)

A reactor has been operating at 25 percent power for 24 hours following a two-hour power reduction from steady-state 100 percent power. Which one of the following describes the current status of the xenon-135 concentration?

A. At equilibrium.

B. Decreasing toward an upturn.

C. Decreasing toward equilibrium.

D. Increasing toward a peak.

ANSWER: C.

TOPIC: 192006
KNOWLEDGE: K1.05 [3.1/3.1]
QID: P1459 (B259)

Following a two-week shutdown, a reactor is taken critical and ramped to 100 percent power in 6 hours. How long will it take to achieve an equilibrium xenon-135 condition after the reactor reaches 100 percent power?

A. 70 to 80 hours

B. 40 to 50 hours

C. 8 to 10 hours

D. 1 to 2 hours

ANSWER: B.

TOPIC: 192006
KNOWLEDGE: K1.05 [3.1/3.1]
QID: P2159 (B2659)

Which one of the following indicates that core Xe-135 concentration is in equilibrium?

A. Xe-135 production and removal rates are momentarily equal five hours after a power increase.

B. A reactor has been operated at 80 percent power for five days.

C. Xe-135 is being produced equally by fission and I-135 decay.

D. A reactor is currently operating at 100 percent power.

ANSWER: B.

TOPIC: 192006
KNOWLEDGE: K1.05 [3.1/3.1]
QID: P2859 (B2760)

Reactors A and B are operating at steady-state 100 percent power with equilibrium xenon-135. The reactors are identical except that reactor A is operating near the end of core life (EOL) and reactor B is operating near the beginning of core life (BOL).

Which reactor is experiencing the most negative reactivity from equilibrium xenon-135?

A. Reactor A (EOL), due to a greater equilibrium concentration of xenon-135.

B. Reactor A (EOL), due to lower competition from the fuel for thermal neutrons.

C. Reactor B (BOL), due to a greater thermal neutron flux in the core.

D. Reactor B (BOL), due to a smaller accumulation of fission product poisons.

ANSWER: B.

TOPIC: 192006
KNOWLEDGE: K1.06 [3.2/3.4]
QID: P259

A reactor has been operating at 50 percent power for one week when power is ramped to 100 percent over a four-hour period. How will the xenon-135 concentration respond?

A. Decrease initially, and then build to a new equilibrium concentration in 8 to 10 hours.

B. Decrease initially, and then build to a new equilibrium concentration in 40 to 50 hours.

C. Increase steadily to a new equilibrium concentration in 20 to 30 hours.

D. Increase steadily to a new equilibrium concentration in 70 to 80 hours.

ANSWER: B.

TOPIC: 192006
KNOWLEDGE: K1.06 [3.2/3.4]
QID: P659

A reactor has been operating at a 50 percent power for 15 hours following a one-hour power reduction from 100 percent. Which one of the following describes the current xenon-135 concentration?

A. Increasing

B. Decreasing

C. At equilibrium

D. Oscillating

ANSWER: B.

TOPIC: 192006
KNOWLEDGE: K1.06 [3.2/3.4]
QID: P959

A reactor was operating for 42 weeks at a steady-state power level below 100 percent when a reactor trip occurred. The reactor was returned to critical after 12 hours and then ramped to 60 percent power in 6 hours.

How much time at steady-state 60 percent power will be required to reach an equilibrium xenon-135 concentration?

A. 20 to 30 hours

B. 40 to 50 hours

C. 70 to 80 hours

D. Unable to determine without knowledge of previous power history

ANSWER: B.

TOPIC: 192006
KNOWLEDGE: K1.06 [3.2/3.4]
QID: P1258

A reactor has been operating at 100 percent power for one week when power is ramped in 4 hours to 25 percent power. The new equilibrium xenon-135 concentration will be _____ the initial 100 percent equilibrium concentration.

A. the same as

B. about 80 percent of

C. about 50 percent of

D. less than 25 percent of

ANSWER: C.

TOPIC: 192006
KNOWLEDGE: K1.06 [3.2/3.4]
QID: P1360 (B1960)

A reactor has been operating at a constant 50 percent power level for 15 hours following a one-hour power reduction from steady-state 100 percent power. Which one of the following describes the current xenon-135 concentration?

A. Increasing toward a peak.

B. Decreasing toward an upturn.

C. Increasing toward equilibrium.

D. Decreasing toward equilibrium.

ANSWER: D.

TOPIC: 192006
KNOWLEDGE: K1.06 [3.2/3.4]
QID: P1659

A reactor was operating for 24 weeks at a steady-state power level below 100 percent when a reactor trip occurred. The reactor was returned to critical after 12 hours, and then ramped to 80 percent power in 6 hours.

Approximately how much time at steady-state 80 percent power will be required to reach an equilibrium xenon-135 concentration?

A. 10 to 20 hours

B. 40 to 50 hours

C. 70 to 80 hours

D. Cannot determine without knowledge of previous power history

ANSWER: B.

TOPIC: 192006
KNOWLEDGE: K1.06 [3.2/3.4]
QID: P1960 (B1262)

A reactor was operating at 100 percent power for two weeks when power was decreased to 10 percent in one hour. Immediately following the power decrease, xenon-135 concentration will _____ for a period of _____.

A. decrease; 4 to 6 hours

B. increase; 4 to 6 hours

C. decrease; 8 to 11 hours

D. increase; 8 to 11 hours

ANSWER: D.

TOPIC: 192006
KNOWLEDGE: K1.06 [3.2/3.4]
QID: P2060

A reactor is initially operating at 50 percent of rated power with equilibrium xenon-135. Power is increased to 100 percent over a one-hour period and average reactor coolant temperature is adjusted to 588°F using manual rod control. Rod control is left in Manual and no subsequent operator actions are taken.

Considering only the reactivity effects of xenon-135 changes, which one of the following describes the average reactor coolant temperature 8 hours after the power change is completed?

A. Greater than 588°F and decreasing slowly

B. Greater than 588°F and increasing slowly

C. Less than 588°F and decreasing slowly

D. Less than 588°F and increasing slowly

ANSWER: A.

TOPIC: 192006
KNOWLEDGE: K1.06 [3.2/3.4]
QID: P2061 (B2158)

A reactor had been operating at 100 percent power for two weeks when power was reduced to 50 percent over a one-hour period. To maintain reactor power stable during the next 24 hours, which one of the following incremental control rod manipulations will be required?

A. Withdraw rods slowly during the entire period.

B. Withdraw rods slowly at first, and then insert rods slowly.

C. Insert rods slowly during the entire period.

D. Insert rods slowly at first, and then withdraw rods slowly.

ANSWER: B.

TOPIC: 192006
KNOWLEDGE: K1.06 [3.2/3.4]
QID: P2160

A reactor had been operating at 50 percent power for two weeks when power was increased to 100 percent over a three-hour period. To maintain reactor power stable during the next 24 hours, which one of the following incremental control rod manipulations will be required?

A. Withdraw rods slowly during the entire period.

B. Withdraw rods slowly at first, and then insert rods slowly.

C. Insert rods slowly during the entire period.

D. Insert rods slowly at first, and then withdraw rods slowly.

ANSWER: D.

TOPIC: 192006
KNOWLEDGE: K1.06 [3.2/3.4]
QID: P2359 (B2660)

Which one of the following explains why xenon-135 oscillations are a concern in a reactor?

A. They can adversely affect core power distribution, and they can require operation below full rated power.

B. They can adversely affect core power distribution, and they can prevent reactor criticality during a reactor startup.

C. They can cause excessively short reactor periods during power operation, and they can require operation below full rated power.

D. They can cause excessively short reactor periods during power operation, and they can prevent reactor criticality during a reactor startup.

ANSWER: A.

TOPIC: 192006
KNOWLEDGE: K1.06 [3.2/3.4]
QID: P2360 (B2361)

A reactor had been operating at 70 percent power for two weeks when power was increased to 100 percent over a two-hour period. To offset xenon-135 reactivity changes during the next 12 hours, which one of the following incremental control rod manipulations will be required?

A. Withdraw rods slowly during the entire period.

B. Withdraw rods slowly at first, and then insert rods slowly.

C. Insert rods slowly during the entire period.

D. Insert rods slowly at first, and then withdraw rods slowly.

ANSWER: D.

TOPIC: 192006
KNOWLEDGE: K1.06 [3.2/3.4]
QID: P2559

A reactor is initially operating at 100 percent power with equilibrium xenon-135. Power is decreased to 50 percent over a one-hour period and average reactor coolant temperature is adjusted to 572°F using manual rod control. Rod control is left in Manual and no subsequent operator actions are taken.

Considering only the reactivity effects of xenon-135 changes, which one of the following describes the average reactor coolant temperature 10 hours after the power change is completed?

A. Less than 572°F and increasing slowly.

B. Less than 572°F and decreasing slowly.

C. Greater than 572°F and increasing slowly.

D. Greater than 572°F and decreasing slowly.

ANSWER: A.

TOPIC: 192006
KNOWLEDGE: K1.06 [3.2/3.4]
QID: P2760

A reactor is initially operating at 80 percent power with equilibrium xenon-135. Power is increased to 100 percent over a two-hour period and average reactor coolant temperature is adjusted to 585°F using manual rod control. Rod control is left in Manual and no subsequent operator actions are taken.

Considering only the reactivity effects of xenon-135 changes, which one of the following describes the average reactor coolant temperature 24 hours after the power change is completed?

A. Less than 585°F and decreasing slowly.

B. Less than 585°F and increasing slowly.

C. Greater than 585°F and decreasing slowly.

D. Greater than 585°F and increasing slowly.

ANSWER: A.

TOPIC: 192006
KNOWLEDGE: K1.06 [3.2/3.4]
QID: P3460

A reactor is initially operating at 100 percent power with equilibrium xenon-135. Power is decreased to 40 percent over a two-hour period and average reactor coolant temperature is adjusted to 562°F using manual rod control. Rod control is left in Manual and no subsequent operator actions are taken.

Considering only the reactivity effects of xenon-135 changes, which one of the following describes the status of the average reactor coolant temperature two hours after the power change is completed?

A. Greater than 562°F and decreasing slowly.

B. Greater than 562°F and increasing slowly.

C. Less than 562°F and decreasing slowly.

D. Less than 562°F and increasing slowly.

ANSWER: C.

TOPIC: 192006
KNOWLEDGE: K1.07 [3.4/3.4]
QID: P260 (B459)

Two identical reactors have been operating at a constant power level for one week. Reactor A is at 50 percent power and reactor B is at 100 percent power. If both reactors trip at the same time, xenon-135 negative reactivity will peak first in reactor _____; and the highest xenon-135 reactivity peak will occur in reactor _____.

A. B; B

B. B; A

C. A; B

D. A; A

ANSWER: C.

TOPIC: 192006
KNOWLEDGE: K1.07 [3.4/3.4]
QID: P1159 (B1761)

Two identical reactors have been operating at a constant power level for one week. Reactor A is at 100 percent power and reactor B is at 50 percent power. If both reactors trip at the same time, xenon-135 concentration will peak first in reactor _____; and the highest peak xenon-135 concentration will occur in reactor _____.

A. B; B

B. B; A

C. A; B

D. A; A

ANSWER: B.

TOPIC: 192006
KNOWLEDGE: K1.07 [3.4/3.4]
QID: P1358 (B1361)

A reactor has been operating at 75 percent power for two months. A manual reactor trip is required for a test. The trip will be followed immediately by a reactor startup with criticality scheduled to occur 12 hours after the trip.

The greatest assurance that fission product poison reactivity will permit criticality during the startup will exist if the reactor is operated at _____ power for 48 hours prior to the trip; and if criticality is rescheduled for _____ hours after the trip.

A. 100 percent; 8

B. 100 percent; 16

C. 50 percent; 8

D. 50 percent; 16

ANSWER: D.

TOPIC: 192006
KNOWLEDGE: K1.07 [3.4/3.4]
QID: P1561

The amount of negative reactivity associated with peak xenon-135 is smallest after a reactor trip from equilibrium _____ reactor power at the _____ of a fuel cycle.

A. 20 percent; beginning

B. 20 percent; end

C. 100 percent; beginning

D. 100 percent; end

ANSWER: A.

TOPIC: 192006
KNOWLEDGE: K1.07 [3.4/3.4]
QID: P1660

The amount of negative reactivity associated with peak xenon-135 is greatest after a reactor trip from equilibrium _____ reactor power at the _____ of a fuel cycle.

A. 20 percent; beginning

B. 20 percent; end

C. 100 percent; beginning

D. 100 percent; end

ANSWER: D.

TOPIC: 192006
KNOWLEDGE: K1.07 [3.4/3.4]
QID: P3860 (B3861)

A reactor has been operating at 80 percent power for two months. A manual reactor trip is required for a test. The trip will be followed by a reactor startup with criticality scheduled to occur 24 hours after the trip.

The greatest assurance that xenon-135 reactivity will permit criticality during the reactor startup will exist if the reactor is operated at _____ power for 48 hours prior to the trip; and if criticality is rescheduled for _____ hours after the trip.

A. 60 percent; 18

B. 60 percent; 30

C. 100 percent; 18

D. 100 percent; 30

ANSWER: B.

TOPIC: 192006
KNOWLEDGE: K1.07 [3.4/3.4]
QID: P6031

A reactor trip occurred <u>one</u> hour ago following several months of operation at 100 percent power. Reactor coolant temperature is being maintained at 550°F and the source range count rate is currently 400 cps. If <u>no</u> additional operator action is taken, how will the source range count rate respond during the next 24 hours? (Assume a constant source neutron flux.)

A. The count rate will remain about the same.

B. The count rate will decrease for the entire period.

C. The count rate will initially decrease and then increase.

D. The count rate will initially increase and then decrease.

ANSWER: C.

TOPIC: 192006
KNOWLEDGE: K1.08 [3.3/3.4]
QID: P62

Slow changes in axial power distribution in a reactor that has operated at a steady-state power level for a long time can be caused by xenon-135...

A. peaking.

B. override.

C. burnup.

D. oscillations.

ANSWER: D.

TOPIC: 192006
KNOWLEDGE: K1.08 [3.3/3.4]
QID: P261

Xenon-135 oscillations that tend to dampen themselves over time are _____ oscillations.

A. converging

B. diverging

C. diffusing

D. equalizing

ANSWER: A.

TOPIC: 192006
KNOWLEDGE: K1.08 [3.3/3.4]
QID: P372

Which one of the following occurrences can cause reactor power production to fluctuate between the top and bottom of the core when steam demand is constant?

A. Steam generator level transients

B. Iodine-135 spiking

C. Xenon-135 oscillations

D. Inadvertent boron dilution

ANSWER: C.

TOPIC: 192006
KNOWLEDGE: K1.08 [3.3/3.4]
QID: P463

A reactor has been operating at 100 percent power for several weeks with a symmetrical axial power distribution peaked at the core midplane. Reactor power is reduced to 50 percent using boration to control reactor coolant temperature while maintaining control rods fully withdrawn.

During the power reduction, the axial power distribution will...

A. shift toward the top of the core.

B. shift toward the bottom of the core.

C. peak at the top and the bottom of the core.

D. remain symmetrical and peaked at the core midplane.

ANSWER: A.

TOPIC: 192006
KNOWLEDGE: K1.08 [3.3/3.4]
QID: P563

A reactor was initially operating at 100 percent power at the beginning of core life with equilibrium xenon-135. Then, reactor power was reduced to 50 percent over a two-hour period.

The following information is given:

	Prior to Power Change	After Power Change
Reactor power:	100 percent	50 percent
Reactor coolant boron concentration:	740 ppm	820 ppm
Control rod position:	Fully withdrawn	Fully withdrawn

What is the effect on power distribution in the core during the first 4 hours following the power reduction?

A. Power production in the top of the core increases relative to the bottom of the core.

B. Power production in the top of the core decreases relative to the bottom of the core.

C. There is no relative change in power distribution in the core.

D. It is impossible to determine without additional information.

ANSWER: A.

TOPIC: 192006
KNOWLEDGE: K1.08 [3.3/3.4]
QID: P761

When a reactor experiences xenon-135 oscillations, the most significant shifts in power generation occur between the _____ of the core.

A. top and bottom

B. adjacent quadrants

C. center and periphery

D. opposite quadrants

ANSWER: A.

TOPIC: 192006
KNOWLEDGE: K1.08 [3.3/3.4]
QID: P763

A reactor has been operating at 80 percent power for several weeks with power production equally distributed axially above and below the core midplane. Reactor power is increased to 100 percent using boron dilution to control reactor coolant temperature while maintaining control rods fully withdrawn.

During the power increase, axial power distribution will...

A. shift toward the top of the core.

B. shift toward the bottom of the core.

C. remain evenly distributed above and below the core midplane.

D. peak at the top and the bottom of the core.

ANSWER: B.

TOPIC: 192006
KNOWLEDGE: K1.08 [3.3/3.4]
QID: P961

Which one of the following will cause reactor power production to fluctuate slowly between the top and bottom of the core with steady-state steam demand?

A. Feedwater variations

B. Dropped center control rod

C. Xenon-135 oscillations

D. Samarium-149 oscillations

ANSWER: C.

TOPIC: 192006
KNOWLEDGE: K1.08 [3.3/3.4]
QID: P1160

Xenon-135 oscillations take about _____ hours to get from maximum xenon-135 negative reactivity to minimum xenon-135 negative reactivity.

A. 40 to 50

B. 24 to 28

C. 12 to 14

D. 6 to 7

ANSWER: C.

TOPIC: 192006
KNOWLEDGE: K1.08 [3.3/3.4]
QID: P2764

A reactor was initially operating at 80 percent power near the beginning of a fuel cycle with equilibrium xenon-135. Then, reactor power was increased to 100 percent over a 2 hour period.

The following information is provided:

	Prior to Power Change	After Power Change
Reactor power:	80 percent	100 percent
Reactor coolant boron concentration:	780 ppm	760 ppm
Control rod position:	Fully Withdrawn	Fully Withdrawn

What is the effect on power distribution in the core during the first 4 hours following the power increase?

A. Power production in the top of the core increases relative to the bottom of the core.

B. Power production in the top of the core decreases relative to the bottom of the core.

C. There is no relative change in power distribution in the core.

D. It is impossible to determine without additional information.

ANSWER: B.

TOPIC: 192006
KNOWLEDGE: K1.08 [3.3/3.4]
QID: P3060 (B3061)

A reactor has been operating at 100 percent power for one month following a refueling outage with axial neutron flux distribution peaked in the bottom half of the core. An inadvertent reactor trip occurs. The reactor is restarted, with criticality occurring 6 hours after the trip. Reactor power is increased to 60 percent over the next 4 hours and then stabilized.

During the one-hour period immediately after power level is stabilized at 60 percent, the core axial neutron flux peak will be located _____ in the core than the pre-scram peak location; and the core axial neutron flux peak will be moving _____.

A. higher; upward

B. higher; downward

C. lower; upward

D. lower; downward

ANSWER: B.

TOPIC: 192006
KNOWLEDGE: K1.09 [3.0/3.1]
QID: P353 (B355)

A nuclear power plant is being returned to operation following a refueling outage. Fuel preconditioning procedures require reactor power to be increased from 10 percent to 100 percent gradually over a one-week period.

During this slow power increase, most of the positive reactivity added by the operator is required to overcome the negative reactivity from...

A. uranium-235 burnup.

B. xenon-135 buildup.

C. fuel temperature increase.

D. moderator temperature increase.

ANSWER: B.

TOPIC: 192006
KNOWLEDGE: K1.09 [3.0/3.1]
QID: P1263

A reactor has been shut down for 7 days to perform maintenance. A reactor startup is performed, and power level is increased to 50 percent over a 5 hour period.

When power reaches 50 percent, the magnitude of xenon-135 negative reactivity will be...

A. increasing toward a peak value.

B. increasing toward an equilibrium value.

C. decreasing toward an equilibrium value.

D. decreasing toward an upturn.

ANSWER: B.

TOPIC: 192006
KNOWLEDGE: K1.09 [3.0/3.1]
QID: P1661

A reactor has been shut down for 5 days to perform maintenance. A reactor startup is performed, and power is ramped to 75 percent over a 16-hour period.

When power reaches 75 percent, the concentration of xenon-135 will be...

A. decreasing toward an upturn.

B. increasing toward a peak value.

C. decreasing toward an equilibrium value.

D. increasing toward an equilibrium value.

ANSWER: D.

TOPIC: 192006
KNOWLEDGE: K1.09 [3.0/3.1]
QID: P5631 (B5631)

A reactor has been shut down for 7 days to perform maintenance. A reactor startup is performed, and power level is increased to 50 percent over a two-hour period.

Ten hours after reactor power reaches 50 percent, the magnitude of xenon-135 negative reactivity will be...

A. increasing toward a downturn.

B. increasing toward an equilibrium value.

C. decreasing toward an equilibrium value.

D. decreasing toward an upturn.

ANSWER: B.

TOPIC: 192006
KNOWLEDGE: K1.09 [3.0/3.1]
QID: P6931

A nuclear power plant was operating at 100 percent power for 3 months near the beginning of a fuel cycle when a reactor trip occurred. Eighteen hours later, the reactor is critical at the point of adding heat with normal operating reactor coolant temperature and pressure. Power level will be raised to 100 percent over the next 3 hours.

During this power level increase, most of the positive reactivity added by the operator will be required to overcome the negative reactivity from...

A. fuel burnup.

B. xenon-135 buildup.

C. fuel temperature increase.

D. moderator temperature increase.

ANSWER: C.

TOPIC: 192006
KNOWLEDGE: K1.10 [3.1/3.2]
QID: P128

A reactor startup is being performed 5 hours after a reactor trip from 100 percent power with equilibrium xenon-135. The reactor is currently at 10 percent power, and is being returned to 100 percent power at 2.0 percent per minute instead of the normal rate of 0.5 percent per minute.

At the faster rate of power increase, the <u>minimum</u> amount of xenon-135 will occur _____ than normal; and the amount of equilibrium xenon-135 at 100 percent power will be _____.

A. sooner; the same

B. sooner; smaller

C. later; the same

D. later; smaller

ANSWER: A.

TOPIC: 192006
KNOWLEDGE: K1.10 [3.1/3.2]
QID: P1062

A reactor was operating at 100 percent power for 8 weeks when a reactor trip occurred. The reactor was critical 6 hours later and power was increased to 100 percent over the next 6 hours.

What was the status of xenon-135 concentration when power reached 100 percent?

A. Increasing toward an equilibrium value.

B. Burning out faster than it is being produced.

C. Increasing toward a peak value.

D. At equilibrium.

ANSWER: B.

TOPIC: 192006
KNOWLEDGE: K1.10 [3.1/3.2]
QID: P1262

Xenon-135 poisoning in a reactor is most likely to prevent a reactor startup following a reactor shutdown from _____ power at the _____ of core life.

A. high; beginning

B. low; beginning

C. high; end

D. low; end

ANSWER: C.

TOPIC: 192006
KNOWLEDGE: K1.10 [3.1/3.2]
QID: P4631

A reactor startup is in progress 5 hours after a reactor trip from 100 percent power with equilibrium xenon-135. The reactor is currently at 10 percent power, and is being returned to 100 percent power at 0.25 percent per minute instead of the normal rate of 0.5 percent per minute.

At the slower rate of power increase, the maximum amount of xenon-135 will occur _____ than normal; and the amount of equilibrium xenon-135 at 100 percent power will be _____.

A. sooner; the same

B. sooner; smaller

C. later; the same

D. later; smaller

ANSWER: C.

TOPIC: 192006
KNOWLEDGE: K1.11 [3.1/3.1]
QID: P63

A reactor was operating at 100 percent power for two weeks when power was quickly reduced to 50 percent. Core xenon-135 will reach a new equilibrium concentration in _____ hours.

A. 8 to 10

B. 20 to 25

C. 40 to 50

D. 70 to 80

ANSWER: C.

TOPIC: 192006
KNOWLEDGE: K1.11 [3.1/3.1]
QID: P263

A reactor that has been operating at 100 percent power for two weeks is reduced in power to 50 percent. What happens to the xenon-135 concentration in the core?

A. There will be no change, because iodine-135 concentration is constant.

B. Xenon-135 concentration will initially build up, and then decrease to a new equilibrium value.

C. Xenon-135 concentration will initially decrease, and then build up to a new equilibrium value.

D. Xenon-135 concentration will steadily decrease to a new equilibrium value.

ANSWER: B.

TOPIC: 192006
KNOWLEDGE: K1.11 [3.1/3.1]
QID: P1860 (B2259)

Which one of the following describes the initial change in xenon-135 concentration immediately following a power increase from steady-state power operation?

A. Decreases, due to the increased rate of xenon-135 radioactive decay.

B. Decreases, due to the increased rate of neutron absorption by xenon-135.

C. Increases, due to the increased xenon-135 production rate from fission.

D. Initially increases, due to the increased iodine-135 production rate from fission.

ANSWER: B.

TOPIC: 192006
KNOWLEDGE: K1.11 [3.1/3.1]
QID: P2261 (B2761)

A reactor has been operating at 50 percent power for 12 hours following a one-hour power reduction from steady-state 100 percent power. Which one of the following describes the current xenon-135 concentration?

A. Increasing toward a peak.

B. Decreasing toward an upturn.

C. Increasing toward equilibrium.

D. Decreasing toward equilibrium.

ANSWER: D.

TOPIC: 192006
KNOWLEDGE: K1.11 [3.1/3.1]
QID: P2762 (B2763)

A reactor that had been operating at 100 percent power for about two months was shut down over a two-hour period. Following the shutdown, xenon-135 will reach a steady-state concentration in _____ hours.

A. 8 to 10

B. 20 to 25

C. 40 to 50

D. 70 to 80

ANSWER: D.

TOPIC: 192006
KNOWLEDGE: K1.11 [3.1/3.1]
QID: P2961 (B2960)

A reactor has been operating at 30 percent power for three hours following a one-hour power reduction from steady-state 100 percent power. Which one of the following describes the current xenon-135 concentration?

A. Increasing toward a peak.

B. Increasing toward equilibrium.

C. Decreasing toward an upturn.

D. Decreasing toward equilibrium.

ANSWER: A.

TOPIC: 192006
KNOWLEDGE: K1.11 [3.1/3.1]
QID: P3261

A nuclear power plant is initially operating at steady-state 100 percent power in the middle of a fuel cycle. The operators decrease main generator load while adding boric acid to the reactor coolant system over a period of 30 minutes. At the end of this time period, reactor power is 70 percent and average reactor coolant temperature is 575°F. All control rods remain fully withdrawn and in manual control.

Considering only the reactivity effects of xenon-135 changes, which one of the following describes the status of the average reactor coolant temperature 60 minutes after the power change is completed?

A. 575°F and stable.

B. Less than 575°F and increasing.

C. Less than 575°F and decreasing.

D. Less than 575°F and stable.

ANSWER: C.

TOPIC: 192006
KNOWLEDGE: K1.11 [3.1/3.1]
QID: P3362 (B2559)

A reactor has been operating at 70 percent power for 20 hours following a one-hour power reduction from steady-state 100 percent power. Which one of the following describes the current xenon-135 concentration?

A. Increasing toward a peak.

B. Decreasing toward an upturn.

C. Decreasing toward equilibrium.

D. At equilibrium.

ANSWER: C.

TOPIC: 192006
KNOWLEDGE: K1.12 [3.1/3.1]
QID: P360

A reactor had operated at 100 percent power for several days when a reactor trip occurred. If the reactor had operated at 50 percent power prior to the trip, the xenon-135 concentration would peak _____; and the peak xenon-135 concentration would be _____.

A. earlier; the same

B. at the same time; the same

C. earlier; less negative

D. at the same time; less negative

ANSWER: C.

TOPIC: 192006
KNOWLEDGE: K1.12 [3.1/3.1]
QID: P663

Following a reactor trip, negative reactivity from xenon-135 initially increases due to...

A. xenon-135 production from the decay of iodine-135.

B. xenon-135 production from the spontaneous fission of uranium-235.

C. the reduction of xenon-135 removal by decay.

D. the reduction of xenon-135 removal by recombination.

ANSWER: A.

TOPIC: 192006
KNOWLEDGE: K1.12 [3.1/3.1]
QID: P863 (B2262)

Twenty-four hours after a reactor trip from 100 percent power with equilibrium xenon-135, the xenon-135 concentration will be approximately...

A. the same as the concentration at the time of the trip and decreasing.

B. the same as the concentration at the time of the trip and increasing.

C. 50 percent lower than the concentration at the time of the trip and decreasing.

D. 50 percent higher than the concentration at the time of the trip and increasing.

ANSWER: A.

TOPIC: 192006
KNOWLEDGE: K1.12 [3.1/3.1]
KNOWLEDGE: K1.13 [2.9/3.0]
QID: P963

A reactor had been operating at 100 percent power for several days when it was shut down over a two-hour period for maintenance. How will the xenon-135 concentration change after the shutdown?

A. Peak in 2 to 4 hours and then decay to near zero in about 1 day.

B. Peak in 2 to 4 hours and then decay to near zero in 3 to 4 days.

C. Peak in 6 to 10 hours and then decay to near zero in about 1 day.

D. Peak in 6 to 10 hours and then decay to near zero in 3 to 4 days.

ANSWER: D.

TOPIC: 192006
KNOWLEDGE: K1.12 [3.1/3.1]
QID: P1063 (B2159)

A reactor had operated at 100 percent power for three weeks when a reactor trip occurred. Which one of the following describes the concentration of xenon-135 in the core 24 hours after the trip?

A. At least twice the concentration at the time of the trip and decreasing.

B. Less than one-half the concentration at the time of the trip and decreasing.

C. At or approaching a peak concentration.

D. Approximately the same as the concentration at the time of the trip.

ANSWER: D.

TOPIC: 192006
KNOWLEDGE: K1.12 [3.1/3.1]
QID: P2262 (B2461)

Fourteen hours after a reactor trip from 100 percent power with equilibrium xenon-135, the concentration of xenon-135 will be _____ than the 100 percent power equilibrium xenon-135 concentration; and xenon-135 will have added a net _____ reactivity since the trip.

A. less; positive

B. less; negative

C. greater; positive

D. greater; negative

ANSWER: D.

TOPIC: 192006
KNOWLEDGE: K1.12 [3.1/3.1]
QID: P2363

How does the amount of xenon-135 change immediately following a reactor trip from 100 percent power with equilibrium xenon-135?

A. Decreases, due to xenon-135 removal by decay.

B. Decreases, due to the reduction in xenon-135 production directly from fission.

C. Increases, due to xenon-135 production from the decay of iodine-135.

D. Increases, due to xenon-135 production from the spontaneous fission of uranium.

ANSWER: C.

TOPIC: 192006
KNOWLEDGE: K1.12 [3.1/3.1]
QID: P2662

Given:

- A reactor was operating at 100 percent power for six weeks when a reactor trip occurred.
- A reactor startup was performed, and criticality was reached 16 hours after the trip.
- Two hours later, the reactor is currently at 30 percent power with control rods in Manual.

If no operator actions are taken over the next hour, average reactor coolant temperature will _____ because xenon-135 concentration is _____.

A. increase; decreasing

B. increase; increasing

C. decrease; decreasing

D. decrease; increasing

ANSWER: A.

TOPIC: 192006
KNOWLEDGE: K1.12 [3.1/3.1]
QID: P2862

A reactor was operating at 100 percent power for 2 months when a reactor trip occurred. Four hours later, the reactor is critical and stable at 10 percent power.

Which one of the following operator actions is required to maintain reactor coolant temperature stable over the next 18 hours?

A. Add positive reactivity during the entire period.

B. Add negative reactivity during the entire period.

C. Add positive reactivity at first, and then negative reactivity.

D. Add negative reactivity at first, and then positive reactivity.

ANSWER: C.

TOPIC: 192006
KNOWLEDGE: K1.13 [2.9/3.0]
QID: P562

After a reactor shutdown from equilibrium xenon-135 conditions, the peak xenon-135 negative reactivity is _____ the pre-shutdown power level.

A. independent of

B. directly proportional to

C. inversely proportional to

D. dependent on, but not directly proportional to

ANSWER: D.

TOPIC: 192006
KNOWLEDGE: K1.13 [2.9/3.0]
QID: P1760

A reactor was shut down following three months of operation at full power. The shutdown occurred over a three-hour period with a constant rate of power decrease.

Which one of the following describes the reactivity added by xenon-135 during the shutdown?

A. Xenon-135 buildup added negative reactivity.

B. Xenon-135 buildup added positive reactivity.

C. Xenon-135 burnout added negative reactivity.

D. Xenon-135 burnout added positive reactivity.

ANSWER: A.

TOPIC: 192006
KNOWLEDGE: K1.14 [3.2/3.3]
QID: P262

Four hours after a reactor trip from 100 percent power operation with equilibrium xenon-135, a reactor is taken critical and power is immediately stabilized for critical data. To maintain a constant reactor power, the operator must add _____ reactivity because xenon-135 concentration is _____.

A. positive; increasing

B. positive; decreasing

C. negative; increasing

D. negative; decreasing

ANSWER: A.

TOPIC: 192006
KNOWLEDGE: K1.14 [3.2/3.3]
QID: P361 (B1862)

A nuclear power plant has been operating at 100 percent power for two months when a reactor trip occurs. Shortly after the reactor trip, a reactor startup is commenced. Four hours after the trip, reactor power is at 5 percent. To maintain reactor power at 5 percent over the next hour, the operator must add...

A. positive reactivity, because the xenon-135 concentration is increasing.

B. negative reactivity, because the xenon-135 concentration is increasing.

C. positive reactivity, because the xenon-135 concentration is decreasing.

D. negative reactivity, because the xenon-135 concentration is decreasing.

ANSWER: A.

TOPIC: 192006
KNOWLEDGE: K1.14 [3.2/3.3]
QID: P561 (B562)

Following a 7 day shutdown, a reactor startup is performed and the reactor is taken to 100 percent power over a 16-hour period. After reaching 100 percent power, what type of reactivity addition will be needed to compensate for xenon-135 changes over the next 24 hours?

A. Negative only

B. Negative, then positive

C. Positive only

D. Positive, then negative

ANSWER: C.

TOPIC: 192006
KNOWLEDGE: K1.14 [3.2/3.3]
QID: P1462

A reactor has been operating at 100 percent power for two weeks. Power is then decreased over a one- hour period to 10 percent.

Assuming manual rod control, which one of the following operator actions is required to maintain a constant reactor coolant temperature at 10 percent power during the next 24 hours?

A. Add negative reactivity during the entire period.

B. Add positive reactivity during the entire period.

C. Add positive reactivity at first, and then negative reactivity

D. Add negative reactivity at first, and then positive reactivity

ANSWER: C.

TOPIC: 192006
KNOWLEDGE: K1.14 [3.2/3.3]
QID: P1762 (B1763)

A reactor had been operating for two months at 100 percent power when a trip occurred. Fifteen hours later, during a reactor startup, the reactor has achieved criticality and reactor power is currently 1.0×10^{-4} percent.

Which one of the following describes the response of reactor power over the next 2 hours without any further operator actions?

A. Power increases toward the point of adding heat, due to the decay of Xe-135.

B. Power increases toward the point of adding heat, due to the decay of Sm-149.

C. Power decreases toward a stable shutdown neutron level, due to the buildup of Xe-135.

D. Power decreases toward a stable shutdown neutron level, due to the buildup of Sm-149.

ANSWER: A.

TOPIC: 192006
KNOWLEDGE: K1.14 [3.2/3.3]
QID: P2260 (B2861)

A reactor is initially shut down with <u>no</u> xenon-135 in the core. Over the next 4 hours, the reactor is made critical and power level is increased to10 percent. The shift supervisor has directed that power level and reactor coolant temperature be maintained constant for 12 hours.

To accomplish this objective, control rods will have to be...

A. inserted periodically for the duration of the 12 hours.

B. withdrawn periodically for the duration of the 12 hours.

C. inserted periodically for 4 to 6 hours, and then withdrawn periodically.

D. withdrawn periodically for 4 to 6 hours, and then inserted periodically.

ANSWER: B.

TOPIC: 192006
KNOWLEDGE: K1.14 [3.2/3.3]
QID: P2561

A reactor is initially shut down with no xenon in the core. Over the next 4 hours, the reactor is made critical and power level is increased to 25 percent. The shift supervisor has directed that power level and reactor coolant temperature be maintained constant for 12 hours.

To accomplish this objective, control rods will have to be...

A. withdrawn periodically for the duration of the 12 hours.

B. inserted periodically for the duration of the 12 hours.

C. withdrawn periodically for 4 to 6 hours, and then inserted periodically.

D. inserted periodically for 4 to 6 hours, and then withdrawn periodically.

ANSWER: A.

TOPIC: 192006
KNOWLEDGE: K1.14 [3.2/3.3]
QID: P2863

A reactor is operating at 100 percent power immediately following a one-hour power increase from steady-state 70 percent power. To keep reactor coolant system temperature stable over the next two hours, the operator must _____ control rods or _____ reactor coolant boron concentration.

A. insert; increase

B. insert; decrease

C. withdraw; increase

D. withdraw; decrease

ANSWER: A.

TOPIC: 192006
KNOWLEDGE: K1.14 [3.2/3.3]
QID: P2963

A reactor is operating at 60 percent power immediately after a one-hour power increase from steady-state 40 percent power. To keep reactor coolant temperature stable over the next two hours, the operator must _____ control rods or _____ reactor coolant boron concentration.

A. insert; increase

B. insert; decrease

C. withdraw; increase

D. withdraw; decrease

ANSWER: A.

TOPIC: 192006
KNOWLEDGE: K1.14 [3.2/3.3]
QID: P3063

A nuclear power plant was initially operating at 100 percent power with equilibrium xenon-135. Then, power was decreased to 75 percent over a one-hour period. The operator is currently adjusting control rod position as necessary to maintain average reactor coolant temperature constant.

What will the control rod position and directional trend be 30 hours after power reached 75 percent?

A. Above the initial 75 percent power position and inserting slowly.

B. Above the initial 75 percent power position and withdrawing slowly.

C. Below the initial 75 percent power position and inserting slowly.

D. Below the initial 75 percent power position and withdrawing slowly.

ANSWER: C.

TOPIC: 192006
KNOWLEDGE: K1.14 [3.2/3.3]
QID: P3563 (B3563)

A nuclear power plant had been operating at 100 percent power for two months when a reactor trip occurred. Soon afterward, a reactor startup was performed. Twelve hours after the trip, the startup has been paused with reactor power at 5 percent.

To maintain reactor power and reactor coolant temperatures stable over the next hour, the operator must add _____ reactivity because the xenon-135 concentration will be _____.

A. positive; increasing

B. negative; increasing

C. positive; decreasing

D. negative; decreasing

ANSWER: D.

TOPIC: 192006
KNOWLEDGE: K1.14 [3.2/3.3]
QID: P3863

A nuclear power plant is initially operating at steady-state 100 percent reactor power in the middle of a fuel cycle. The operators then decrease main generator load to 90 percent over a one-hour period while adding boric acid to the reactor coolant system. After the required amount of boric acid is added, reactor power is 90 percent and average reactor coolant temperature is 582°F. All control rods remain fully withdrawn and in manual control.

If <u>no</u> other operator actions are taken, which one of the following describes the average reactor coolant temperature after an additional hour?

A. Higher than 582°F and increasing slowly.

B. Higher than 582°F and decreasing slowly.

C. Lower than 582°F and increasing slowly.

D. Lower than 582°F and decreasing slowly.

ANSWER: D.

TOPIC: 192006
KNOWLEDGE: K1.14 [3.2/3.3]
QID: P6831 (B6831)

A reactor has been shut down for 7 days following 2 months of steady-state 100 percent power operation. A reactor startup is then performed and the reactor is taken to 100 percent power over a 12-hour period. After 100 percent power is reached, what incremental control rod positioning will be needed to compensate for xenon-135 changes over the next 24 hours?

A. Withdraw rods slowly during the entire period.

B. Withdraw rods slowly at first, and then insert rods slowly.

C. Insert rods slowly during the entire period.

D. Insert rods slowly at first, and then withdraw rods slowly.

ANSWER: A.

TOPIC: 192006
KNOWLEDGE: K1.14 [3.2/3.3]
QID: P7431 (B7431)

A nuclear power plant was initially operating at steady-state 100 percent power at the end of a fuel cycle (EOC) when the plant was shut down for refueling. After refueling, the reactor was restarted and the plant is currently operating at steady-state 100 percent power at the beginning of a fuel cycle (BOC). Assume the average energy released by each fission did <u>not</u> change.

Compared to the equilibrium xenon-135 concentration at 100 percent power just prior to the refueling, the <u>current</u> equilibrium xenon-135 concentration is…

A. greater, because the higher fission rate at BOC produces xenon-135 at a faster rate.

B. greater, because the lower thermal neutron flux at BOC removes xenon-135 at a slower rate.

C. smaller, because the lower fission rate at BOC produces xenon-135 at a slower rate.

D. smaller, because the higher thermal neutron flux at BOC removes xenon-135 at a faster rate.

ANSWER: B.

TOPIC: 192006
KNOWLEDGE: K1.14 [3.2/3.3]
QID: P7657 (B7657)

With Xe-135 initially at equilibrium, which one of the following power changes produces the greatest change in equilibrium Xe-135 negative reactivity?

A. 0 percent to 10 percent

B. 30 percent to 40 percent

C. 60 percent to 70 percent

D. 90 percent to 100 percent

ANSWER: A.

TOPIC: 192007
KNOWLEDGE: K1.01 [2.1/2.5]
QID: P362 (B364)

Which one of the following is not a function performed by burnable poisons in an operating reactor?

A. Provide neutron flux shaping.

B. Provide more uniform power density.

C. Offset the effects of control rod burnout.

D. Allow higher enrichment of new fuel assemblies.

ANSWER: C.

TOPIC: 192007
KNOWLEDGE: K1.01 [2.1/2.5]
QID: P671

A major reason for installing burnable poisons in a reactor is to…

A. decrease the amount of fuel required to produce a given amount of heat.

B. decrease the amount of fuel required to produce a given duration of plant operation.

C. allow more fuel to be loaded to prolong a fuel cycle.

D. absorb neutrons that would otherwise be lost from the core.

ANSWER: C.

TOPIC: 192007
KNOWLEDGE: K1.01 [2.1/2.5]
QID: P864

Instead of using only a higher reactor coolant boron concentration to offset the enrichment of new fuel assemblies, burnable poisons are installed in a new reactor core to...

A. prevent boron precipitation during normal operation.

B. establish a more negative moderator temperature coefficient.

C. allow control rods to be farther withdrawn upon initial criticality.

D. maintain reactor coolant pH above a minimum acceptable value.

ANSWER: B.

TOPIC: 192007
KNOWLEDGE: K1.01 [2.1/2.5]
QID: P1664

Why are burnable poisons installed in a new reactor core <u>instead</u> of simply using a higher reactor coolant boron concentration for reactivity control?

A. To prevent boron precipitation during normal operation.

B. To establish a more negative moderator temperature coefficient.

C. To minimize the distortion of the neutron flux distribution caused by soluble boron.

D. To allow the loading of excessive reactivity in the form of higher fuel enrichment.

ANSWER: B.

TOPIC: 192007
KNOWLEDGE: K1.04 [3.1/3.4]
QID: P64

A reactor is operating near the end of its fuel cycle. Reactor power and reactor coolant system (RCS) temperature are being allowed to "coast down."

Why is RCS boron dilution no longer used for reactivity control for this reactor?

A. The magnitude of the differential boron worth (ΔK/K/ppm) has increased so much that reactivity changes from RCS boron dilution cannot be safely controlled by the operator.

B. The magnitude of the differential boron worth (ΔK/K/ppm) has decreased so much that a very large amount of water must be added to the RCS to make a small positive reactivity addition to the core.

C. The RCS boron concentration has become so high that a very large amount of boron must be added to produce a small increase in boron concentration.

D. The RCS boron concentration has become so low that a very large amount of water must be added to the RCS to produce a small decrease in boron concentration.

ANSWER: D.

TOPIC: 192007
KNOWLEDGE: K1.04 [3.1/3.4]
QID: P264

Just prior to a refueling outage, a nuclear power plant was operating at 100 percent power with a reactor coolant boron concentration of 50 ppm. After the refueling outage, the 100 percent power boron concentration is approximately 1,000 ppm.

Which one of the following is the primary reason for the large increase in 100 percent power reactor coolant boron concentration?

A. The negative reactivity from power defect after the outage is much greater than before the outage.

B. The magnitude of differential boron worth ($\Delta K/K$/ppm) after the outage is much less than before the outage.

C. The excess reactivity in the core after the outage is much greater than before the outage.

D. The magnitude of integral control rod worth after the outage is much less than before the outage.

ANSWER: C.

TOPIC: 192007
KNOWLEDGE: K1.04 [3.1/3.4]
QID: P464

During a six-month period of continuous 100 percent power operation in the middle of a fuel cycle, the reactor coolant boron concentration must be decreased periodically to compensate for...

A. buildup of fission product poisons and decreasing control rod worth.

B. fuel depletion and buildup of fission product poisons.

C. decreasing control rod worth and burnable poison burnout.

D. burnable poison burnout and fuel depletion.

ANSWER: B.

TOPIC: 192007
KNOWLEDGE: K1.04 [3.1/3.4]
QID: P1264 (B1163)

Refer to the drawing of K_{eff} versus core age (see figure below).

The major cause for the change in K_{eff} from point 1 to point 2 is the…

A. depletion of fuel.

B. burnout of burnable poisons.

C. initial heatup of the reactor.

D. buildup of fission product poisons.

ANSWER: D.

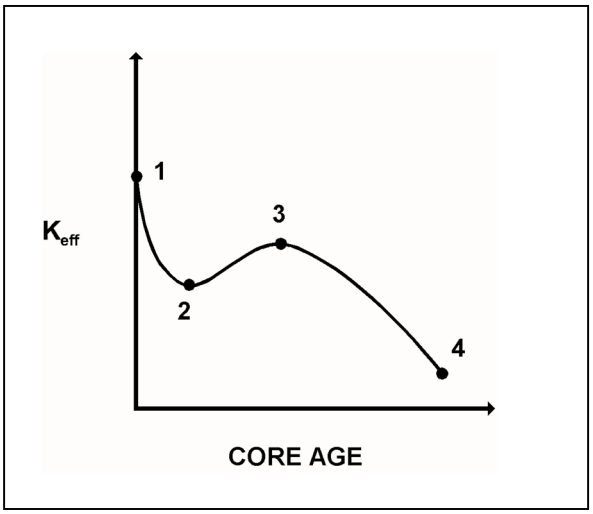

TOPIC: 192007
KNOWLEDGE: K1.04 [3.1/3.4]
QID: P1563

Refer to the graph of critical boron concentration versus burnup for a reactor following a refueling outage (See figure below.).

Which one of the following is primarily responsible for the shape of the curve from the middle of core life to the end of core life?

A. Fuel depletion

B. Fission product buildup

C. Burnable poison burnout

D. Conversion of U-238 to Pu-239

ANSWER: A.

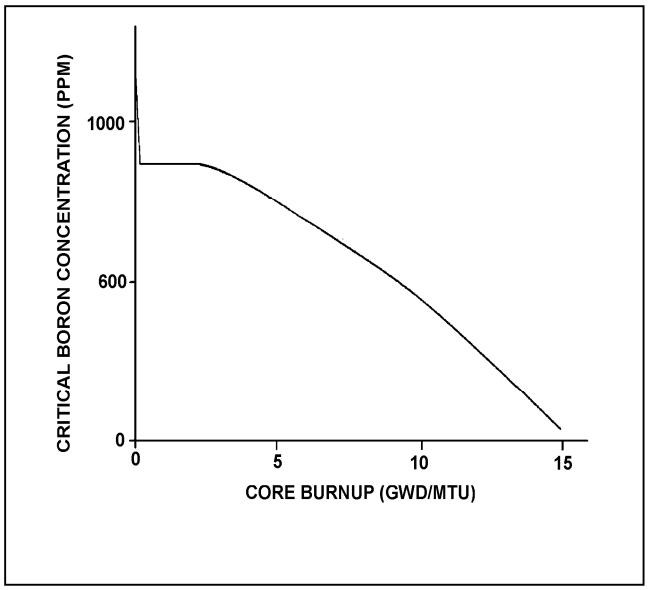

TOPIC: 192007
KNOWLEDGE: K1.04 [3.1/3.4]
QID: P1864

Refer to the graph of critical boron concentration versus core burnup for a reactor during its first fuel cycle (see figure below).

Which one of the following explains why reactor coolant critical boron concentration becomes relatively constant for a period early in the fuel cycle?

A. Fission product poison buildup is being offset by burnable poison burnout and fuel depletion.

B. Fission product poison buildup and fuel depletion are being offset by burnable poison burnout.

C. Fuel depletion is being offset by the buildup of fissionable plutonium and fission product poisons.

D. Fuel depletion and burnable poison burnout and are being offset by the buildup of fission product poisons.

ANSWER: B.

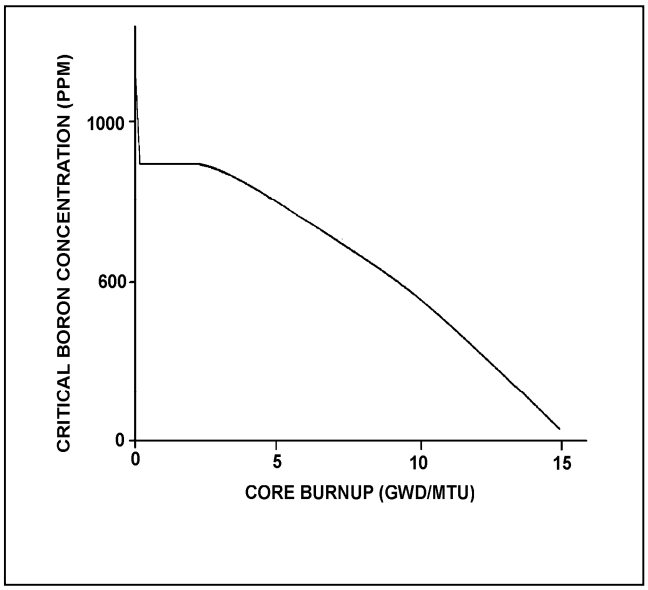

TOPIC: 192007
KNOWLEDGE: K1.04 [3.1/3.4]
QID: P2763

During continuous 100 percent power operation in the middle of a fuel cycle, the reactor coolant boron concentration must be decreased periodically to compensate for fuel depletion. What other core age-related factor requires a periodic decrease in reactor coolant boron concentration?

A. Decreasing control rod worth.

B. Buildup of fission product poisons.

C. Burnout of burnable poisons.

D. Decreasing fuel temperature.

ANSWER: B.

TOPIC: 192007
KNOWLEDGE: K1.04 [3.1/3.4]
QID: P2964

A reactor has been operating at 100 percent power for three months following a refueling outage. If the reactor is operated at 100 percent power without making RCS boron additions or dilutions for the next month, RCS boron concentration will...

A. decrease, because boron atoms decompose at normal RCS operating temperatures.

B. decrease, because irradiated boron-10 atoms undergo a neutron-alpha reaction.

C. remain constant, because irradiated boron-10 atoms become stable boron-11 atoms.

D. remain constant, because irradiated boron-10 atoms still have large absorption cross sections for thermal neutrons.

ANSWER: B.

TOPIC: 192007
KNOWLEDGE: K1.04 [3.1/3.4]
QID: P4832

Just prior to a refueling outage, the reactor coolant boron concentration at 100 percent power was 50 ppm. Burnable poisons were installed during the outage. Immediately following the outage, the boron concentration at 100 percent power was 1,000 ppm.

Which one of the following contributes to the need for a much higher 100 percent power reactor coolant boron concentration after the outage?

A. The negative reactivity from burnable poisons after the outage is greater than before the outage.

B. The negative reactivity from fission product poisons after the outage is smaller than before the outage.

C. The positive reactivity from the fuel in the core after the outage is smaller than before the outage.

D. The positive reactivity from a unit withdrawal of a typical control rod after the outage is greater than before the outage.

ANSWER: B.

TOPIC: 192007
KNOWLEDGE: K1.04 [3.1/3.4]
QID: P7532

A nuclear power plant had been shut down for two weeks near the middle of a fuel cycle when a reactor startup was commenced. Twelve hours later, reactor power is 100 percent, where it is being maintained. Which one of the following is the primary reason for periodically reducing the reactor coolant boron concentration during the next 36 hours?

A. To offset the buildup of xenon-135.

B. To offset the depletion of the reactor fuel.

C. To maintain an adequate shutdown margin.

D. To maintain reactor heat flux below the critical heat flux.

ANSWER: A.

TOPIC: 192007
KNOWLEDGE: K1.05 [3.0/3.2]
QID: P1964

Which one of the following describes whether reactor power can be increased from 50 percent to 100 percent in a controlled manner faster near the beginning of core life (BOL) or near the end of core life (EOL)? (Assume all control rods are fully withdrawn just prior to beginning the power increase.)

A. Faster near EOL, because faster changes in boron concentration are possible.

B. Faster near EOL, because integral control rod worth is greater.

C. Faster near BOL, because faster changes in boron concentration are possible.

D. Faster near BOL, because integral control rod worth is greater.

ANSWER: C.

TOPIC: 192007
KNOWLEDGE: K1.05 [3.0/3.2]
QID: P2053

Which one of the following correctly compares the rates at which reactor power can be safely increased from 80 percent to 100 percent at the beginning of a fuel cycle (BOC) versus at the end of a fuel cycle (EOC)?

A. Slower at EOC, due to a lower maximum rate of reactor coolant boron dilution.

B. Slower at EOC, due to a less negative differential control rod worth.

C. Slower at BOC, due to a lower maximum rate of reactor coolant boron dilution.

D. Slower at BOC, due to a less negative differential control rod worth.

ANSWER: A.

TOPIC: 192007
KNOWLEDGE: K1.05 [3.0/3.2]
QID: P3364

Compared to adding boric acid to the reactor coolant system (RCS) during forced circulation, adding boric acid during natural circulation requires _____ time to achieve complete mixing in the RCS; and after complete mixing occurs, a 1 ppm increase in RCS boron concentration during natural circulation will cause a/an _____ change in reactivity for a given reactor coolant temperature.

A. more; smaller

B. more; equal

C. less; smaller

D. less; equal

ANSWER: B.

TOPIC: 192008
KNOWLEDGE: K1.01 [3.4/3.5]
QID: P565

During a reactor startup, the first reactivity addition caused the stable source range count rate to increase from 20 cps to 40 cps. The second reactivity addition caused the stable count rate to increase from 40 cps to 160 cps.

Which one of the following statements accurately compares the two reactivity additions?

A. The first reactivity addition was larger.

B. The second reactivity addition was larger.

C. The first and second reactivity additions were equal.

D. There is not enough information given to compare the reactivity values.

ANSWER: A.

TOPIC: 192008
KNOWLEDGE: K1.01 [3.4/3.5]
QID: P1665

During a reactor startup, the first positive reactivity addition caused the stable source range count rate to increase from 20 cps to 30 cps. The second positive reactivity addition caused the stable count rate to increase from 30 cps to 60 cps. K_{eff} was 0.97 prior to the first reactivity addition.

Which one of the following statements accurately compares the reactivity additions?

A. The first and second reactivity additions were approximately equal.

B. The first reactivity addition was approximately twice as large as the second.

C. The second reactivity addition was approximately twice as large as the first.

D. There is not enough information given to compare the reactivity values.

ANSWER: A.

TOPIC: 192008
KNOWLEDGE: K1.02 [2.8/3.1]
QID: P3366

A nuclear power plant was operating at steady-state 100 percent power near the end of a fuel cycle when a reactor trip occurred. Four hours after the trip, with reactor coolant temperature at normal no-load temperature, which one of the following will cause the fission rate in the reactor core to increase?

A. The operator fully withdraws one bank/group of control rods.

B. Reactor coolant temperature increases by 3°F.

C. Reactor coolant boron concentration increases by 10 ppm.

D. An additional two hours is allowed to pass with no other changes in plant parameters.

ANSWER: A.

TOPIC: 192008
KNOWLEDGE: K1.02 [2.8/3.1]
QID: P3464

A nuclear power plant was operating at steady-state 100 percent power near the end of a fuel cycle when a reactor trip occurred. Four hours after the trip, reactor coolant temperature is currently being maintained at normal no-load temperature in anticipation of commencing a reactor startup.

At this time, which one of the following will cause the fission rate in the reactor core to decrease?

A. The operator fully withdraws one bank/group of control rods.

B. Reactor coolant temperature decreases by 3°F.

C. Reactor coolant boron concentration decreases by 10 ppm.

D. An additional 2 hours is allowed to pass with no other changes in plant parameters.

ANSWER: D.

TOPIC: 192008
KNOWLEDGE: K1.03 [3.9/4.0]
QID: P65 (B266)

While withdrawing control rods during a reactor startup, the stable source range count rate doubled. If the same amount of reactivity that caused the first doubling is added again, the stable count rate will _____; and the reactor will be _____.

A. more than double; subcritical

B. more than double; critical

C. double; subcritical

D. double; critical

ANSWER: B.

TOPIC: 192008
KNOWLEDGE: K1.03 [3.9/4.0]
QID: P265

A reactor startup is in progress and the reactor is slightly subcritical in the source range. Assuming the reactor remains subcritical, a short control rod <u>withdrawal</u> will cause the reactor startup rate indication to increase sharply in the positive direction, and then...

A. rapidly decrease and stabilize at a negative 1/3 dpm.

B. gradually decrease and stabilize at zero.

C. stabilize until the point of adding heat (POAH) is reached; then decrease to zero.

D. continue increasing until the POAH is reached; then decrease to zero.

ANSWER: B.

TOPIC: 192008
KNOWLEDGE: K1.03 [3.9/4.0]
QID: P448 (B1949)

A subcritical reactor has a stable source range count rate of 150 cps with a shutdown reactivity of -2.0 %ΔK/K. How much positive reactivity must be added to establish a stable count rate of 300 cps?

A. 0.5 %ΔK/K

B. 1.0 %ΔK/K

C. 1.5 %ΔK/K

D. 2.0 %ΔK/K

ANSWER: B.

TOPIC: 192008
KNOWLEDGE: K1.03 [3.9/4.0]
QID: P848 (B2149)

A subcritical reactor has an initial K_{eff} of 0.8 with a stable source range count rate of 100 cps. If positive reactivity is added until K_{eff} equals 0.95, at what value will the count rate stabilize?

A. 150 cps

B. 200 cps

C. 300 cps

D. 400 cps

ANSWER: D.

TOPIC: 192008
KNOWLEDGE: K1.03 [3.9/4.0]
QID: P1065 (B1565)

During a reactor startup, equal amounts of positive reactivity are being sequentially added, and the source range count rate is allowed to reach equilibrium after each addition. Which one of the following statements applies for each successive reactivity addition?

A. The time required to reach equilibrium count rate is the same.

B. The time required to reach equilibrium count rate is shorter.

C. The numerical change in equilibrium count rate is greater.

D. The numerical change in equilibrium count rate is the same.

ANSWER: C.

TOPIC: 192008
KNOWLEDGE: K1.03 [3.9/4.0]
QID: P1166

Which one of the following describes the prompt jump and the change in stable source range count rate resulting from a short control rod withdrawal with K_{eff} at 0.95 as compared to an identical control rod withdrawal with K_{eff} at 0.99? (Assume the reactivity additions are equal, and the reactor remains subcritical.)

A. The prompt jump in count rate will be the same, and the increase in stable count rate will be the same.

B. The prompt jump in count rate will be greater with K_{eff} at 0.99, but the increase in stable count rate will be the same.

C. The prompt jump in count rate will be the same, but the increase in stable count rate will be greater with K_{eff} at 0.99.

D. The prompt jump in count rate will be greater with K_{eff} at 0.99, and the increase in stable count rate will be greater with K_{eff} at 0.99.

ANSWER: D.

TOPIC: 192008
KNOWLEDGE: K1.03 [3.9/4.0]
QID: P1348 (B1449)

A reactor is shut down by 1.8 %ΔK/K. Positive reactivity is added that increases the stable source range count rate from 15 cps to 300 cps.

What is the current value of K_{eff}?

A. 0.982

B. 0.990

C. 0.995

D. 0.999

ANSWER: D.

TOPIC: 192008
KNOWLEDGE: K1.03 [3.9/4.0]
QID: P1448 (B1849)

A subcritical reactor has a stable source range count rate of 150 cps with a shutdown reactivity of -2.0 %ΔK/K. Approximately how much positive reactivity must be added to establish a stable count rate of 600 cps?

A. 0.5 %ΔK/K

B. 1.0 %ΔK/K

C. 1.5 %ΔK/K

D. 2.0 %ΔK/K

ANSWER: C.

TOPIC: 192008
KNOWLEDGE: K1.03 [3.9/4.0]
QID: P1748

A subcritical reactor has a stable source range count rate of 60 cps with a shutdown reactivity of -2.0 %ΔK/K. How much positive reactivity must be added to establish a stable count rate of 300 cps?

A. 0.4 %ΔK/K

B. 0.6 %ΔK/K

C. 1.4 %ΔK/K

D. 1.6 %ΔK/K

ANSWER: D.

TOPIC: 192008
KNOWLEDGE: K1.03 [3.9/4.0]
QID: P1766 (B2165)

A reactor startup is in progress with the reactor currently subcritical.

Which one of the following describes the change in source range count rate resulting from a short control rod withdrawal with K_{eff} at 0.95 as compared to an identical control rod withdrawal with K_{eff} at 0.99? (Assume the reactivity additions are equal and the reactor remains subcritical.)

A. Both the prompt jump in count rate and the increase in stable count rate will be the same.

B. Both the prompt jump in count rate and the increase in stable count rate will be smaller with K_{eff} at 0.95.

C. The prompt jump in count rate will be smaller with K_{eff} at 0.95, but the increase in stable count rate will be the same.

D. The prompt jump in count rate will be the same, but the increase in stable count rate will be smaller with K_{eff} at 0.95.

ANSWER: B.

TOPIC: 192008
KNOWLEDGE: K1.03 [3.9/4.0]
QID: P2466 (B2465)

A reactor startup is being performed by adding equal amounts of positive reactivity and waiting for neutron population to stabilize. As the reactor approaches criticality, the numerical change in stable neutron population resulting from each reactivity addition will _____; and the time required for the neutron population to stabilize after each reactivity addition will _____.

A. increase; remain the same

B. increase; increase

C. remain the same; remain the same

D. remain the same; increase

ANSWER: B.

TOPIC: 192008
KNOWLEDGE: K1.03 [3.9/4.0]
QID: P2448 (B2649)

A reactor startup is being performed with xenon-free conditions. Control rod withdrawal is stopped when K_{eff} equals 0.995 and source range count rate stabilizes at 1,000 cps. No additional operator actions are taken.

Which one of the following describes the count rate 20 minutes after rod withdrawal is stopped?

A. Less than 1,000 cps and decreasing toward the prestartup count rate.

B. Less than 1,000 cps and stable above the prestartup count rate.

C. Greater than 1,000 cps and increasing toward criticality.

D. 1,000 cps and constant.

ANSWER: D.

TOPIC: 192008
KNOWLEDGE: K1.03 [3.9/4.0]
QID: P2467

A reactor startup is in progress. The reactor is slightly subcritical with a constant startup rate of 0.0 dpm. A short control rod insertion will cause the reactor startup rate indication to initially become negative, and then...

A. gradually become less negative and return to 0.0 dpm.

B. gradually become more negative until the neutron population reaches the source range equilibrium level, and then return to 0.0 dpm.

C. stabilize until the neutron population reaches the source range equilibrium level, and then return to 0.0 dpm.

D. stabilize at -1/3 dpm until fission neutrons are no longer a significant contributor to the neutron population, and then return to 0.0 dpm.

ANSWER: A.

TOPIC: 192008
KNOWLEDGE: K1.03 [3.9/4.0]
QID: P3048 (B3049)

A reactor startup is being commenced with initial source range count rate stable at 20 cps. After a period of control rod withdrawal, count rate stabilizes at 80 cps.

If the total reactivity added by the above control rod withdrawal is 4.5 %ΔK/K, how much additional positive reactivity must be inserted to make the reactor critical?

A. 1.5 %ΔK/K

B. 2.0 %ΔK/K

C. 2.5 %ΔK/K

D. 3.0 %ΔK/K

ANSWER: A.

TOPIC: 192008
KNOWLEDGE: K1.03 [3.9/4.0]
QID: P3348

A xenon-free shutdown nuclear power plant is slowly cooling down due to an unisolable steam leak. The leak began when reactor coolant temperature was 400°F and the readings on all source range channels were 80 cps. Currently, reactor coolant temperature is 350°F and all source range channels indicate 160 cps.

Assume the moderator temperature coefficient remains constant throughout the cooldown, and no operator action is taken. What will the status of the reactor be when reactor coolant temperature reaches 290°F?

A. Subcritical, with source range count rate less than 320 cps.

B. Subcritical, with source range count rate greater than 320 cps.

C. Supercritical, with source range count rate less than 320 cps.

D. Supercritical, with source range count rate greater than 320 cps.

ANSWER: D.

TOPIC: 192008
KNOWLEDGE: K1.03 [3.9/4.0]
QID: P3925 (B3925)

A reactor startup is in progress with K_{eff} initially equal to 0.90. By what factor will the core neutron level increase if the reactor is stabilized when K_{eff} equals 0.99?

A. 10

B. 100

C. 1,000

D. 10,000

ANSWER: A.

TOPIC: 192008
KNOWLEDGE: K1.03 [3.9/4.0]
QID: P4225 (B4225)

A reactor is shutdown with a K_{eff} of 0.96 and a stable source range count rate of 50 cps when a reactor startup is commenced. Which one of the following will be the stable count rate when K_{eff} reaches 0.995?

A. 400 cps

B. 800 cps

C. 4,000 cps

D. 8,000 cps

ANSWER: A.

TOPIC: 192008
KNOWLEDGE: K1.03 [3.9/4.0]
QID: P4525 (B4525)

A nuclear power plant is being cooled down from 500°F to 190°F. Just prior to commencing the cooldown, the source range count rate was stable at 32 cps. After two hours, with reactor coolant temperature at 350°F, the source range count rate is stable at 64 cps.

Assume the moderator temperature coefficient remains constant throughout the cooldown and reactor power remains below the point of adding heat.

Without additional operator action, what will the status of the reactor be when reactor coolant temperature reaches 190°F?

A. Subcritical, with source range count rate below 150 cps.

B. Subcritical, with source range count rate above 150 cps.

C. Exactly critical.

D. Supercritical.

ANSWER: D.

TOPIC: 192008
KNOWLEDGE: K1.03 [3.9/4.0]
QID: P4534

A reactor is critical in the source range during a reactor startup with a core effective delayed neutron fraction of 0.007. The operator then adds positive reactivity to establish a stable 0.5 dpm startup rate.

If the core effective delayed neutron fraction had been 0.005, what would be the approximate stable startup rate after the addition of the same amount of positive reactivity?

A. 0.6 dpm

B. 0.66 dpm

C. 0.7 dpm

D. 0.76 dpm

ANSWER: D.

TOPIC: 192008
KNOWLEDGE: K1.03 [3.9/4.0]
QID: P5025

A nuclear power plant is initially shutdown with a K_{eff} of 0.92 and a stable source range count rate of 200 cps. Then a reactor startup is initiated. All control rod motion is stopped when K_{eff} equals 0.995. The instant that rod motion stops, source range count rate is 1,800 cps.

When source range count rate stabilizes, count rate will be approximately...

A. 1,800 cps

B. 2,400 cps

C. 3,200 cps

D. 3,600 cps

ANSWER: C.

TOPIC: 192008
KNOWLEDGE: K1.03 [3.9/4.0]
QID: P5225 (B5225)

A nuclear power plant was initially shutdown with a stable source range count rate of 30 cps. Using many small additions of positive reactivity, a total of 0.1 %ΔK/K was added to the core and the stable source range count rate is currently 60 cps.

What was the stable source range count rate after only 0.05 %ΔK/K had been added during the above process?

A. 40 cps

B. 45 cps

C. 50 cps

D. 55 cps

ANSWER: A.

TOPIC: 192008
KNOWLEDGE: K1.03 [3.9/4.0]
QID: P5625

A PWR nuclear power plant has been shut down for two weeks and currently has the following stable conditions:

Reactor coolant temperature	=	550°F
Reactor coolant boron concentration	=	800 ppm
Source range count rate	=	32 cps

A reactor coolant boron dilution is commenced. After two hours, with reactor coolant boron concentration stable at 775 ppm, the source range count rate is stable at 48 cps.

Assume the differential boron worth (ΔK/K/ppm) remains constant throughout the dilution. Also assume that reactor coolant temperature remains constant, control rod position does <u>not</u> change, and <u>no</u> reactor protection actuations occur.

If the reactor coolant boron concentration is further reduced to750 ppm, what will be the status of the reactor?

A. Subcritical, with a stable source range count rate of approximately 64 cps.

B. Subcritical, with a stable source range count rate of approximately 96 cps.

C. Critical, with a stable source range count rate of approximately 64 cps.

D. Critical, with a stable source range count rate of approximately 96 cps.

ANSWER: B.

TOPIC: 192008
KNOWLEDGE: K1.03 [3.9/4.0]
QID: P7627 (B7627)

Refer to the drawing that shows a graph of fission rate versus time (see figure below). Both axes have linear scales.

Which one of the following events, initiated at 0 seconds, could cause the reactor response shown on the graph?

A. A step addition of positive reactivity to a reactor that is initially subcritical in the source range and remains subcritical for the duration of the 60-second interval shown.

B. A step addition of positive reactivity to a reactor that is initially critical in the source range and remains below the point of adding heat for the duration of the 60-second interval shown.

C. A continuous addition of positive reactivity at a constant rate to a reactor that is initially subcritical in the source range and remains subcritical for the duration of the 60-second interval shown.

D. A continuous addition of positive reactivity at a constant rate to a reactor that is initially critical in the source range and remains below the point of adding heat for the duration of the 60-second interval shown.

ANSWER: A.

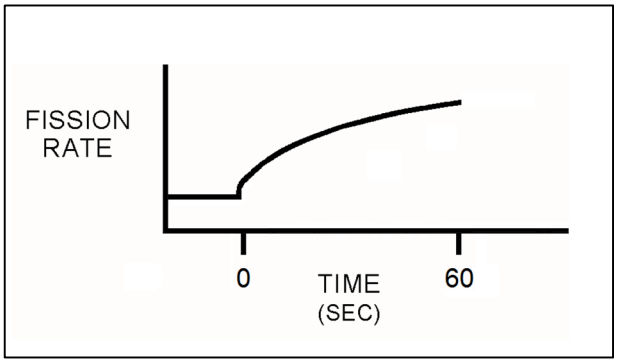

TOPIC: 192008
KNOWLEDGE: K1.03 [3.9/4.0]
QID: P7668 (B7668)

At the beginning of a reactor startup, K_{eff} was 0.97 and the stable source range count rate was 40 cps. After several incremental control rod withdrawals, the stable source range count rate was 400 cps. The next incremental control rod withdrawal resulted in a stable source range count rate of 600 cps. What is the current K_{eff}?

A. 0.98

B. 0.988

C. 0.998

D. There is <u>not</u> enough information given to calculate the current K_{eff}.

ANSWER: C.

TOPIC: 192008
KNOWLEDGE: K1.04 [3.8/3.8]
QID: P266 (B1566)

During a reactor startup, the operator adds 1.0 %ΔK/K of positive reactivity by withdrawing control rods, thereby increasing the stable source range count rate from 220 cps to 440 cps.

Approximately how much additional positive reactivity is required to raise the stable count rate to 880 cps?

A. 4.0 %ΔK/K

B. 2.0 %ΔK/K

C. 1.0 %ΔK/K

D. 0.5 %ΔK/K

ANSWER: D.

TOPIC: 192008
KNOWLEDGE: K1.04 [3.8/3.8]
QID: P566

A reactor is initially subcritical with a K_{eff} of 0.97 and a stable source range count rate of 500 cps.

Which one of the following will be the approximate final steady-state count rate following a rod withdrawal that adds 1.05 %ΔK/K?

A. 750 cps

B. 1,000 cps

C. 2,000 cps

D. 2,250 cps

ANSWER: A.

TOPIC: 192008
KNOWLEDGE: K1.04 [3.8/3.8]
QID: P666

During a reactor startup, control rods are withdrawn such that K_{eff} increases from 0.98 to 0.99. If the stable source range count rate before the rod withdrawal was 500 cps, which one of the following will be the final stable count rate?

A. 707 cps

B. 1,000 cps

C. 1,500 cps

D. 2,000 cps

ANSWER: B.

TOPIC: 192008
KNOWLEDGE: K1.04 [3.8/3.8]
QID: P1866 (B2266)

As a reactor approaches criticality during a reactor startup, it takes longer to reach an equilibrium neutron level after each control rod withdrawal due to the increased...

A. length of time required to complete a neutron generation.

B. number of neutron generations required to reach a stable neutron level.

C. length of time from neutron birth to absorption.

D. fraction of delayed neutrons being produced.

ANSWER: B.

TOPIC: 192008
KNOWLEDGE: K1.04 [3.8/3.8]
QID: P1867 (B2167)

During a reactor startup, the first reactivity addition caused the stable source range count rate to increase from 20 cps to 40 cps. The second reactivity addition caused the stable count rate to increase from 40 cps to 80 cps. K_{eff} was 0.92 prior to the first reactivity addition.

Which one of the following statements describes the magnitude of the reactivity additions?

A. The first reactivity addition was approximately twice as large as the second.

B. The second reactivity addition was approximately twice as large as the first.

C. The first and second reactivity additions were approximately the same.

D. There is not enough data given to determine the relationship between reactivity values.

ANSWER: A.

TOPIC: 192008
KNOWLEDGE: K1.04 [3.8/3.8]
QID: P1972 (B1067)

With K_{eff} at 0.92 during a reactor startup, the stable source range count rate is noted to be 780 cps. Later in the same startup, the stable count rate is 4,160 cps.

What is the current value of K_{eff}?

A. 0.945

B. 0.950

C. 0.975

D. 0.985

ANSWER: D.

TOPIC: 192008
KNOWLEDGE: K1.04 [3.8/3.8]
QID: P2248 (B2249)

Two reactors are currently shut down with reactor startups in progress. The reactors are identical except that reactor A has a source neutron strength of 100 neutrons per second and reactor B has a source neutron strength of 200 neutrons per second. The control rods are stationary and K_{eff} is 0.98 in both reactors. Core neutron levels have stabilized in both reactors.

Which one of the following lists the core neutron levels (neutrons per second) in reactors A and B?

	Reactor A (n/sec)	Reactor B (n/sec)
A.	5,000	10,000
B.	10,000	20,000
C.	10,000	40,000
D.	20,000	40,000

ANSWER: A.

TOPIC: 192008
KNOWLEDGE: K1.04 [3.8/3.8]
QID: P2265 (B366)

With K_{eff} at 0.95 during a reactor startup, source range indication is stable at 100 cps. After a number of control rods have been withdrawn, source range indication stabilizes at 270 cps. What is the current value of K_{eff}?

A. 0.963

B. 0.972

C. 0.981

D. 0.990

ANSWER: C.

TOPIC: 192008
KNOWLEDGE: K1.04 [3.8/3.8]
QID: P2366 (B2365)

A reactor startup is in progress with a current K_{eff} of 0.95 and a stable source range count rate of 120 cps. Which one of the following stable count rates will occur when K_{eff} becomes 0.97?

A. 200 cps

B. 245 cps

C. 300 cps

D. 375 cps

ANSWER: A.

TOPIC: 192008
KNOWLEDGE: K1.04 [3.8/3.8]
QID: P2468 (B1766)

A reactor startup is in progress with a current K_{eff} of 0.95 and a stable source range count rate of 150 cps. Which one of the following stable count rates will occur when K_{eff} becomes 0.98?

A. 210 cps

B. 245 cps

C. 300 cps

D. 375 cps

ANSWER: D.

TOPIC: 192008
KNOWLEDGE: K1.04 [3.8/3.8]
QID: P2766 (B2765)

With K_{eff} at 0.95 during a reactor startup, source range indication is stable at 120 cps. After a period of control rod withdrawal, source range indication stabilizes at 600 cps.

What is the current value of K_{eff}?

A. 0.96

B. 0.97

C. 0.98

D. 0.99

ANSWER: D.

TOPIC: 192008
KNOWLEDGE: K1.04 [3.8/3.8]
QID: P3848 (B3849)

A reactor is shutdown with a K_{eff} of 0.8. The source range count rate is stable at 800 cps. What percentage of the core neutron population is being contributed directly by neutron sources other than neutron-induced fission?

A. 10 percent

B. 20 percent

C. 80 percent

D. 100 percent

ANSWER: B.

TOPIC: 192008
KNOWLEDGE: K1.04 [3.8/3.8]
QID: P4734 (B7638)

During a reactor startup, positive reactivity addition X caused the stable source range count rate to increase from 20 cps to 40 cps. Later in the startup, after several other additions of positive reactivity, positive reactivity addition Y caused the stable source range count rate to increase from 320 cps to 640 cps.

Which one of the following statements describes how the magnitudes of the two positive reactivity additions (X and Y) compare?

A. Reactivity addition X was several times greater in magnitude than reactivity addition Y.

B. Reactivity addition X was several times smaller in magnitude than reactivity addition Y.

C. Reactivity additions X and Y were about equal in magnitude.

D. There is not enough information given to determine the relationship between the reactivity additions.

ANSWER: A.

TOPIC: 192008
KNOWLEDGE: K1.04 [3.8/3.8]
QID: P6133 (B6134)

A subcritical reactor has a stable source range count rate of 2.0 x 10^5 cps with a K_{eff} of 0.98. Positive reactivity is added to the core until a stable count rate of 5.0 x 10^5 cps is achieved. What is the current value of K_{eff}?

A. 0.984

B. 0.988

C. 0.992

D. 0.996

ANSWER: C.

TOPIC: 192008
KNOWLEDGE: K1.04 [3.8/3.8]
QID: P7628 (B7628)

A reactor is shutdown with a K_{eff} of 0.8. The source range count rate is stable at 800 cps. What percentage of the core neutron population is being contributed directly by neutron-induced fission?

A. 10 percent

B. 20 percent

C. 80 percent

D. 100 percent

ANSWER: C.

TOPIC: 192008
KNOWLEDGE: K1.04 [3.8/3.8]
QID: P7698 (B7698)

A reactor is shutdown with a K_{eff} of 0.96. The source range count rate is stable at 480 cps. What percentage of the core neutron population is being contributed directly by neutron sources other than neutron-induced fission?

A. 4 percent

B. 50 percent

C. 96 percent

D. 100 percent

ANSWER: A.

TOPIC: 192008
KNOWLEDGE: K1.05 [3.8/3.9]
QID: P267 (B1365)

As criticality is approached during a reactor startup, equal insertions of positive reactivity result in a _____ numerical change in the stable source range count rate and a _____ time to reach each new stable count rate.

A. larger; longer

B. larger; shorter

C. smaller; longer

D. smaller; shorter

ANSWER: A.

TOPIC: 192008
KNOWLEDGE: K1.05 [3.8/3.9]
QID: P365 (B365)

A reactor startup is in progress with a stable source range count rate and the reactor is near criticality. Which one of the following statements describes count rate characteristics during and after a 5-second control rod withdrawal? (Assume the reactor remains subcritical.)

A. There will be no change in count rate until criticality is achieved.

B. The count rate will rapidly increase (prompt jump) to a stable higher value.

C. The count rate will rapidly increase (prompt jump), then gradually increase and stabilize at a higher value.

D. The count rate will rapidly increase (prompt jump), then gradually decrease and stabilize at the original value.

ANSWER: C.

TOPIC: 192008
KNOWLEDGE: K1.05 [3.8/3.9]
QID: P1265 (B1967)

During an initial fuel load, the subcritical multiplication factor increases from 1.0 to 4.0 as the first 100 fuel assemblies are loaded. What is K_{eff} after the first 100 fuel assemblies are loaded?

A. 0.25

B. 0.5

C. 0.75

D. 1.0

ANSWER: C.

TOPIC: 192008
KNOWLEDGE: K1.05 [3.8/3.9]
QID: P1770 (B1665)

Refer to the drawing of three 1/M plots labeled A, B, and C (see figure below). Each axis has linear units.

The least conservative approach to criticality is represented by plot _____; which could possibly result from recording source range count rates at _____ time intervals after incremental fuel loading steps as compared to the conditions represented by the other plots.

A. A; shorter

B. A; longer

C. C; shorter

D. C; longer

ANSWER: C.

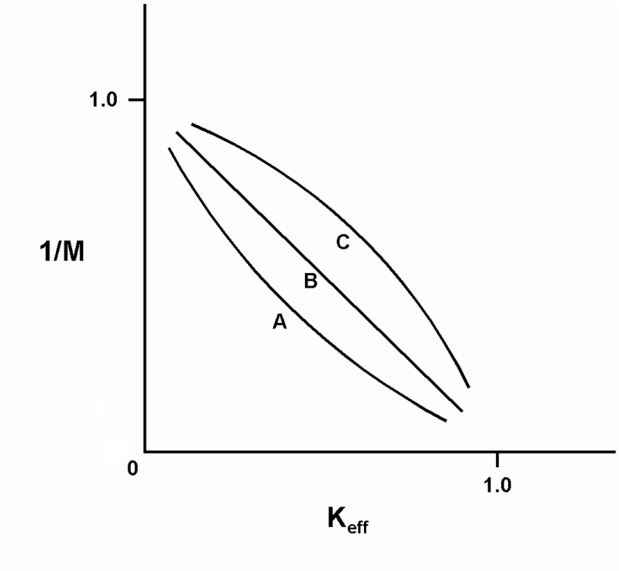

TOPIC: 192008
KNOWLEDGE: K1.05 [3.8/3.9]
QID: P3567

A reactor startup is in progress for a reactor that is in the middle of a fuel cycle. The reactor coolant system is at normal operating temperature and pressure. The main steam isolation valves are open and the main turbine bypass (also called steam dump) valves are closed. The reactor is near criticality.

Reactor startup rate (SUR) is stable at zero when, suddenly, a turbine bypass valve fails open and remains stuck open, dumping steam to the main condenser. The operator immediately ensures no control rod motion is occurring and takes no further action. Assume the steam generator water levels remain stable, and no automatic reactor protective actions occur.

As a result of the valve failure, SUR will initially become _____; and reactor power will stabilize _____ the point of adding heat.

A. positive; at

B. positive; above

C. negative; at

D. negative; above

ANSWER: B.

TOPIC: 192008
KNOWLEDGE: K1.05 [3.8/3.9]
QID: P3665 (B3665)

Refer to the drawing of a 1/M plot with curves A and B (see figure below). Each axis has linear units.

Curve A would result if each fuel assembly loaded during the early stages of the refueling caused a relatively _____ fractional change in source range count rate compared to the later stages of the refueling; curve B would result if each fuel assembly contained equal _____.

A. small; fuel enrichment

B. small; reactivity

C. large; fuel enrichment

D. large; reactivity

ANSWER: D.

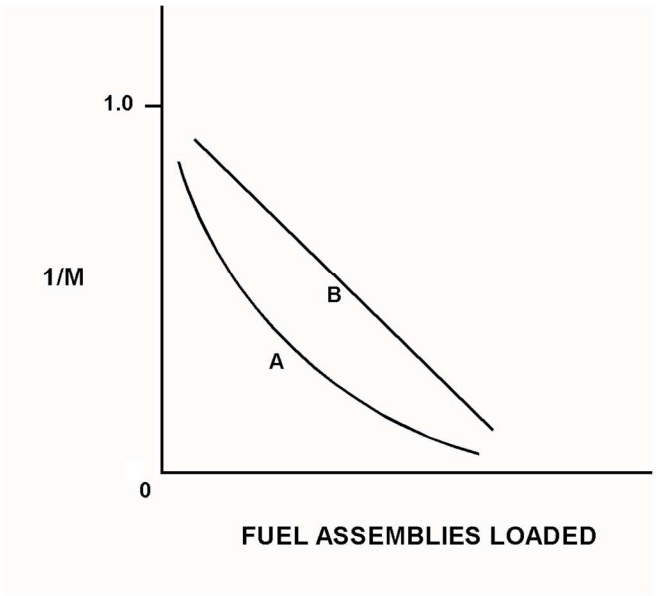

TOPIC: 192008
KNOWLEDGE: K1.05 [3.8/3.9]
QID: P5733 (B5733)

During an initial fuel load, the subcritical multiplication factor increases from 1.0 to 8.0. What is the current value of K_{eff}?

A. 0.125

B. 0.5

C. 0.75

D. 0.875

ANSWER: D.

TOPIC: 192008
KNOWLEDGE: K1.05 [3.8/3.9]
QID: P6034 (B6033)

Refer to the drawing of a 1/M plot with curves A and B (see figure below). Each axis has linear units.

Curve A would result if each fuel assembly loaded during the early stages of core refueling caused a relatively _____ fractional change in stable source range count rate compared to the later stages of the refueling; curve B would result if each fuel assembly contained equal _____.

A. small; fuel enrichment

B. small; reactivity

C. large; fuel enrichment

D. large; reactivity

ANSWER: B.

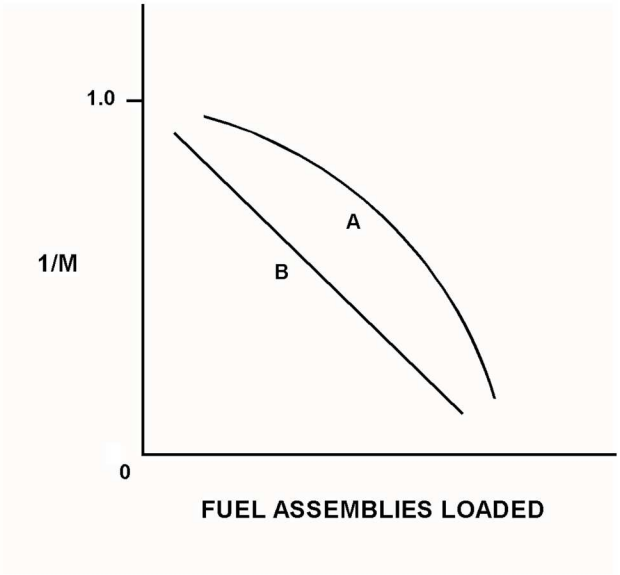

TOPIC: 192008
KNOWLEDGE: K1.06 [2.9/3.1]
QID: P466

During a reactor startup, as K_{eff} increases toward 1.0 the value of 1/M...

A. decreases toward zero.

B. decreases toward 1.0.

C. increases toward infinity.

D. increases toward 1.0.

ANSWER: A.

TOPIC: 192008
KNOWLEDGE: K1.06 [2.9/3.1]
QID: P969

The following data was obtained under stable conditions during a reactor startup:

Control Rod Position (units withdrawn)	Source Range Count Rate (cps)
0	20
10	25
15	28
20	33
25	40
30	50

Assuming uniform differential rod worth, at what approximate control rod position will criticality occur?

A. 66 to 75 units withdrawn

B. 56 to 65 units withdrawn

C. 46 to 55 units withdrawn

D. 35 to 45 units withdrawn

ANSWER: C.

TOPIC: 192008
KNOWLEDGE: K1.06 [2.9/3.1]
QID: P1167 (B2767)

The following data was obtained under stable conditions during a reactor startup:

Control Rod Position (units withdrawn)	Source Range Count Rate (cps)
0	180
10	210
15	250
20	300
25	360
30	420

Assuming uniform differential rod worth, at what approximate control rod position will criticality occur?

A. 35 to 45 units withdrawn

B. 46 to 55 units withdrawn

C. 56 to 65 units withdrawn

D. 66 to 75 units withdrawn

ANSWER: B.

TOPIC: 192008
KNOWLEDGE: K1.06 [2.9/3.1]
QID: P1667 (B1567)

The following data was obtained under stable conditions during a reactor startup:

Control Rod Position (units withdrawn)	Source Range Count Rate (cps)
0	180
5	200
10	225
15	257
20	300
25	360
30	450

Assuming uniform differential rod worth, at what approximate control rod position will criticality occur?

A. 40 units withdrawn

B. 50 units withdrawn

C. 60 units withdrawn

D. 70 units withdrawn

ANSWER: B.

TOPIC: 192008
KNOWLEDGE: K1.06 [2.9/3.1]
QID: P1966 (B1767)

The following data was obtained under stable conditions during a reactor startup:

Control Rod Position (units withdrawn)	Source Range Count Rate (cps)
10	360
15	400
20	450
25	514
30	600
35	720
40	900

Assuming uniform differential rod worth, at what approximate control rod position will criticality occur?

A. 50 units withdrawn

B. 60 units withdrawn

C. 70 units withdrawn

D. 80 units withdrawn

ANSWER: B.

TOPIC: 192008
KNOWLEDGE: K1.07 [3.5/3.6]
QID: P67

An estimated critical rod position has been calculated for criticality to occur 4 hours after a reactor trip from steady-state 100 percent power. The actual critical rod position will be lower than the estimated critical rod position if...

A. the startup is delayed until 8 hours after the trip.

B. the steam dump pressure setpoint is lowered by 100 psi prior to reactor startup.

C. actual boron concentration is 10 ppm higher than the assumed boron concentration.

D. one control rod remains fully inserted during the approach to criticality.

ANSWER: B.

TOPIC: 192008
KNOWLEDGE: K1.07 [3.5/3.6]
QID: P367

Which one of the following is not required to determine the estimated critical boron concentration for a reactor startup to be performed 48 hours following an inadvertent reactor trip?

A. Reactor power level just prior to the trip.

B. Steam generator levels just prior to the trip.

C. Xenon-135 reactivity in the core just prior to the trip.

D. Samarium-149 reactivity in the core just prior to the trip.

ANSWER: B.

TOPIC: 192008
KNOWLEDGE: K1.07 [3.5/3.6]
QID: P467

An estimated critical rod position (ECP) has been calculated for criticality to occur 6 hours after a reactor trip from 60 days of operation at 100 percent power. Which one of the following events or conditions will result in the actual critical rod position being lower than the ECP?

A. The startup is delayed for approximately 2 hours.

B. Steam generator feedwater addition rate is reduced by 5 percent just prior to criticality.

C. Steam generator pressures are decreased by 100 psi just prior to criticality.

D. A new boron sample shows a current boron concentration 20 ppm higher than that used in the ECP calculation.

ANSWER: C.

TOPIC: 192008
KNOWLEDGE: K1.07 [3.5/3.6]
QID: P765

Which one of the following conditions will result in criticality occurring at a rod position that is lower than the estimated control rod position?

A. Adjusting reactor coolant system boron concentration to 50 ppm lower than assumed for startup calculations.

B. A malfunction resulting in control rod speed being lower than normal speed.

C. Delaying the time of startup from 10 days to 14 days following a trip from 100 percent power equilibrium conditions.

D. Misadjusting the steam dump (turbine bypass) controller such that steam pressure is maintained 50 psig higher than the required no-load setting.

ANSWER: A.

TOPIC: 192008
KNOWLEDGE: K1.07 [3.5/3.6]
QID: P970

An estimated critical rod position (ECP) has been calculated for criticality to occur 15 hours after a reactor trip from long-term 100 percent power operation. Which one of the following conditions would cause the actual critical rod position to be higher than the ECP?

A. A 90 percent value for reactor power was used for power defect determination in the ECP calculation.

B. Reactor criticality is achieved approximately 2 hours earlier than anticipated.

C. Steam generator pressures are decreased by 100 psi just prior to criticality.

D. Current boron concentration is 10 ppm lower than the value used in the ECP calculation.

ANSWER: B.

TOPIC: 192008
KNOWLEDGE: K1.07 [3.5/3.6]
QID: P1266

A reactor is subcritical with a startup in progress. Which one of the following conditions will result in a critical rod position that is lower than the estimated critical rod position?

A. A malfunction resulting in control rod speed being faster than normal speed.

B. A malfunction resulting in control rod speed being slower than normal speed.

C. Delaying the time of startup from 3 hours to 5 hours following a trip from 100 percent power equilibrium conditions.

D. An inadvertent dilution of reactor coolant system boron concentration.

ANSWER: D.

TOPIC: 192008
KNOWLEDGE: K1.07 [3.5/3.6]
QID: P1365

Control rods are being withdrawn during a reactor startup. Which one of the following will result in reactor criticality at a rod position that is higher than the estimated critical rod position?

A. Steam generator pressure increases by 50 psia.

B. Steam generator level increases by 10 percent.

C. Pressurizer pressure increases by 50 psia.

D. Pressurizer level increases by 10 percent.

ANSWER: A.

TOPIC: 192008
KNOWLEDGE: K1.07 [3.5/3.6]
QID: P1565

A reactor startup is in progress following a reactor trip from steady-state 100 percent power. Which one of the following conditions will result in criticality occurring at a rod position that is higher than the estimated critical rod position?

A. Misadjusting the steam dump (turbine bypass) controller such that steam generator pressure is maintained 50 psig higher than the required no-load setting.

B. Adjusting reactor coolant system boron concentration to 50 ppm lower than assumed for startup calculations.

C. A malfunction resulting in control rod speed being 10 percent slower than normal speed.

D. Delaying the time of startup from 10 days to 14 days following the trip.

ANSWER: A.

TOPIC: 192008
KNOWLEDGE: K1.07 [3.5/3.6]
QID: P1666

An estimated critical rod position (ECP) has been calculated for criticality to occur 15 hours after a reactor trip that ended three months of operation at 100 percent power.

Which one of the following will result in criticality occurring at a rod position that is lower than the calculated ECP?

A. Adjusting reactor coolant system boron concentration to 50 ppm higher than assumed for startup calculations.

B. A malfunction resulting in control rod speed being slower than normal speed.

C. Moving the time of startup from 15 hours to 12 hours following the trip.

D. Using a pretrip reactor power of 90 percent to determine power defect.

ANSWER: D.

TOPIC: 192008
KNOWLEDGE: K1.07 [3.5/3.6]
QID: P1765

A reactor trip has occurred from 100 percent reactor power and equilibrium xenon-135 conditions near the middle of a fuel cycle. An estimated critical rod position (ECP) has been calculated using the following assumptions:

- Criticality occurs 24 hours after the trip.
- Reactor coolant temperature is 550°F.
- Reactor coolant boron concentration is 400 ppm.

Which one of the following will result in criticality occurring at a rod position that is <u>higher</u> than the calculated ECP?

A. Decreasing reactor coolant system boron concentration to 350 ppm.

B. A malfunction resulting in control rod speed being 20 percent higher than normal speed.

C. Moving the time of criticality to 30 hours after the trip.

D. Misadjusting the steam dump (turbine bypass) controller such that reactor coolant temperature is being maintained at 553°F.

ANSWER: D.

TOPIC: 192008
KNOWLEDGE: K1.07 [3.5/3.6]
QID: P7335

A reactor trip has occurred from 100 percent power and equilibrium xenon-135 conditions near the middle of a fuel cycle. An estimated critical rod position (ECP) has been calculated for the subsequent reactor startup using the following assumptions:

- Criticality occurs 24 hours after the trip.
- Reactor coolant temperature is 550°F.
- Reactor coolant boron concentration is 400 ppm.

Which one of the following will result in criticality occurring at a control rod position that is lower than the calculated ECP?

A. Moving the time of criticality to 18 hours after the trip.

B. Decreasing reactor coolant system boron concentration to 350 ppm.

C. A malfunction resulting in control rod speed being 20 percent lower than normal speed.

D. Misadjusting the steam dump (turbine bypass) controller such that reactor coolant temperature is being maintained at 553°F.

ANSWER: B.

TOPIC: 192008
KNOWLEDGE: K1.09 [3.2/3.3]
QID: P68 (B123)

With K_{eff} at 0.985, how much reactivity must be added to make a reactor exactly critical?

A. 1.48 %ΔK/K

B. 1.50 %ΔK/K

C. 1.52 %ΔK/K

D. 1.54 %ΔK/K

ANSWER: C.

TOPIC: 192008
KNOWLEDGE: K1.09 [3.2/3.3]
QID: P469

A reactor is subcritical by 1.0 %ΔK/K when the operator dilutes the reactor coolant system boron concentration by 30 ppm. If differential boron worth is -0.025 %ΔK/K/ppm, the reactor is currently...

A. subcritical.

B. critical.

C. supercritical.

D. prompt critical.

ANSWER: A.

TOPIC: 192008
KNOWLEDGE: K1.09 [3.2/3.3]
QID: P2267 (B867)

When a reactor is critical, reactivity is...

A. infinity.

B. undefined.

C. 0.0 ΔK/K.

D. 1.0 ΔK/K.

ANSWER: C.

TOPIC: 192008
KNOWLEDGE: K1.10 [3.3/3.4]
QID: P69

During a reactor startup, if the startup rate is constant and positive without any further reactivity addition, then the reactor is...

A. critical.

B. supercritical.

C. subcritical.

D. prompt critical.

ANSWER: B.

TOPIC: 192008
KNOWLEDGE: K1.10 [3.3/3.4]
QID: P125

A reactor is initially critical at 10,000 cps in the source range when a steam generator atmospheric relief valve fails open. Assume end of fuel cycle conditions, no reactor trip, and no operator actions are taken.

When the reactor stabilizes, the average reactor coolant temperature (T_{ave}) will be _____ than the initial T_{ave} and reactor power will be _____ the point of adding heat.

A. greater; at

B. greater; greater than

C. less; at

D. less; greater than

ANSWER: D.

TOPIC: 192008
KNOWLEDGE: K1.10 [3.3/3.4]
QID: P136

A reactor startup is being performed following a one-month shutdown period. If the reactor is taken critical and then stabilized at 10,000 cps in the source range, over the next 10 minutes the count rate will...

A. remain constant.

B. decrease linearly.

C. decrease geometrically.

D. decrease exponentially.

ANSWER: A.

TOPIC: 192008
KNOWLEDGE: K1.10 [3.3/3.4]
QID: P1870

A reactor startup is in progress following a one-month shutdown. Upon reaching criticality, the operator establishes a positive 0.5 dpm startup rate and stops control rod motion.

After an additional five minutes, reactor power will be _____ and startup rate will be _____. (Assume reactor power remains below the point of adding heat.)

A. constant; constant

B. constant; increasing

C. increasing; constant

D. increasing; increasing

ANSWER: C.

TOPIC: 192008
KNOWLEDGE: K1.10 [3.3/3.4]
QID: P2667

A reactor is critical at 1.0 x 10^{-6} percent power. Control rods are withdrawn for 5 seconds and then stopped, resulting in a stable startup rate (SUR) of positive 0.2 dpm.

If the control rods had been inserted for 5 seconds instead of withdrawn, the stable SUR would have been: (Assume equal absolute values of reactivity are added in both cases.)

A. more negative than -0.2 dpm because, compared to reactor power increases, reactor power decreases result in smaller delayed neutron fractions.

B. more negative than -0.2 dpm because, compared to reactor power increases, reactor power decreases are less limited by delayed neutrons.

C. less negative than -0.2 dpm because, compared to reactor power increases, reactor power decreases result in larger delayed neutron fractions.

D. less negative than -0.2 dpm because, compared to reactor power increases, reactor power decreases are more limited by delayed neutrons.

ANSWER: D.

TOPIC: 192008
KNOWLEDGE: K1.10 [3.3/3.4]
QID: P3467 (B3451)

A reactor is critical well below the point of adding heat during a plant startup. A small amount of positive reactivity is then added to the core, and a stable positive startup rate (SUR) is established.

With the stable positive SUR, the following power levels are observed:

Time	Power Level
0 sec	3.16×10^{-7} percent
90 sec	1.0×10^{-5} percent

Which one of the following will be the reactor power level at time = 120 seconds?

A. 3.16×10^{-5} percent

B. 5.0×10^{-5} percent

C. 6.32×10^{-5} percent

D. 1.0×10^{-4} percent

ANSWER: A.

TOPIC: 192008
KNOWLEDGE: K1.10 [3.3/3.4]
QID: P5334 (B5334)

Given:

- Reactors A and B are identical except that reactor A has an effective delayed neutron fraction of 0.0068 and reactor B has an effective delayed neutron fraction of 0.0052.
- Reactor A has a stable period of 45 seconds and reactor B has a stable period of 42 seconds.
- Both reactors are initially operating at 1.0×10^{-8} percent power.

The reactor that is supercritical by the greater amount of positive reactivity is reactor _____; and the first reactor to reach 1.0×10^{-1} percent power will be reactor _____.

A A; A

B. A; B

C. B; A

D. B; B

ANSWER: B.

TOPIC: 192008
KNOWLEDGE: K1.10 [3.3/3.4]
QID: P5535 (B5534)

A reactor is currently operating in the source range with a stable positive 90-second period. The core effective delayed neutron fraction ($\bar{\beta}_{eff}$) is 0.006. How much additional positive reactivity is needed to establish a stable positive 60-second period?

A. 0.026 %ΔK/K

B. 0.033 %ΔK/K

C. 0.067 %ΔK/K

D. 0.086 %ΔK/K

ANSWER: A.

TOPIC: 192008
KNOWLEDGE: K1.10 [3.3/3.4]
QID: P6435 (B6434)

A reactor is critical near the end of a fuel cycle with power level stable at 1.0×10^{-10} percent. Which one of the following is the smallest listed amount of positive reactivity that is capable of increasing reactor power level to the point of adding heat?

A. 0.001 %ΔK/K

B. 0.003 %ΔK/K

C. 0.005 %ΔK/K

D. 0.007 %ΔK/K

ANSWER: A.

TOPIC: 192008
KNOWLEDGE: K1.10 [3.3/3.4]
QID: P6734 (B6734)

Reactors A and B are identical except that reactor A has an effective delayed neutron fraction of 0.007 and reactor B has an effective delayed neutron fraction of 0.006. Both reactors are initially critical at 1.0×10^{-8} percent of rated thermal power when +0.1 %ΔK/K is simultaneously added to both reactors.

Five minutes after the reactivity additions, reactor _____ will be at the higher power level; and reactor _____ will have the higher startup rate.

A. A; A

B. A; B

C. B; A

D. B; B

ANSWER: D.

TOPIC: 192008
KNOWLEDGE: K1.10 [3.3/3.4]
QID: P7688 (B7688)

Given:

- Reactors A and B are identical except that reactor A has an effective delayed neutron fraction of 0.0055 and reactor B has an effective delayed neutron fraction of 0.0052.
- Reactor A has a stable period of 42 seconds and reactor B has a stable period of 45 seconds.
- Both reactors are initially operating at 1.0×10^{-8} percent power.

The reactor that is supercritical by the greater amount of positive reactivity is reactor _____; and the first reactor to reach 1.0×10^{-1} percent power will be reactor _____.

A. A; A

B. A; B

C. B; A

D. B; B

ANSWER: A.

TOPIC: 192008
KNOWLEDGE: K1.11 [3.8/3.8]
QID: P868

Which one of the following indicates that a reactor has achieved criticality during a normal reactor startup?

A. Constant positive startup rate during rod withdrawal.

B. Increasing positive startup rate during rod withdrawal.

C. Constant positive startup rate with no rod motion.

D. Increasing positive startup rate with no rod motion.

ANSWER: C.

TOPIC: 192008
KNOWLEDGE: K1.11 [3.8/3.8]
QID: P2968

A reactor startup is in progress. Control rod withdrawal was stopped several minutes ago to assess criticality. Which one of the following is a combination of indications that together support a declaration that the reactor has reached criticality?

A. Startup rate is stable at 0.0 dpm; source range count rate is stable.

B. Startup rate is stable at 0.2 dpm; source range count rate is stable.

C. Startup rate is stable at 0.0 dpm; source range count rate is slowly increasing.

D. Startup rate is stable at 0.2 dpm; source range count rate is slowly increasing.

ANSWER: D.

TOPIC: 192008
KNOWLEDGE: K1.12 [3.5/3.6]
QID: P767

A reactor has just achieved criticality at 1.0×10^{-8} percent reactor power during a reactor startup from xenon-free conditions. The operator establishes a 0.5 dpm startup rate to increase power. Over a period of 10 minutes, startup rate decreases to zero and then becomes increasingly negative.

Which one of the following is a possible cause for these indications?

A. Fuel depletion.

B. Burnable poison burnout.

C. Reactor power reaching the point of adding heat.

D. Inadvertent boration of the reactor coolant system.

ANSWER: D.

TOPIC: 192008
KNOWLEDGE: K1.12 [3.5/3.6]
QID: P1366

During a reactor startup from a xenon-free condition, and after recording critical data, the operator establishes a positive 0.4 dpm startup rate to increase power. Within 10 minutes, and prior to reaching the point of adding heat, reactor power stops increasing and begins to slowly decrease.

Which one of the following changes could have caused this behavior?

A. Inadvertent boration of the RCS.

B. Xenon buildup in the core.

C. Gradual cooling of the RCS.

D. Fission-induced heating of the fuel.

ANSWER: A.

TOPIC: 192008
KNOWLEDGE: K1.13 [3.4/3.6]
QID: P670 (B670)

After taking critical data during a reactor startup, the operator establishes a positive 1.0 dpm startup rate to increase power to the point of adding heat (POAH). Which one of the following is the approximate amount of reactivity needed to stabilize reactor power at the POAH? (Assume that $\bar{\beta}_{eff}$ = 0.00579.)

A. -0.16 %ΔK/K

B. -0.19 %ΔK/K

C. -0.23 %ΔK/K

D. -0.29 %ΔK/K

ANSWER: A.

TOPIC: 192008
KNOWLEDGE: K1.13 [3.4/3.6]
QID: P768

The point of adding heat can be defined as the power level at which the reactor is producing enough heat...

A. for the fuel temperature coefficient to produce a positive reactivity feedback.

B. for the void coefficient to produce a negative reactivity feedback.

C. to cause a measurable temperature increase in the fuel and coolant.

D. to support main turbine operations.

ANSWER: C.

TOPIC: 192008
KNOWLEDGE: K1.13 [3.4/3.6]
QID: P2370 (B2369)

After taking critical data during a reactor startup, the operator establishes a positive 0.54 dpm startup rate to increase reactor power to the point of adding heat (POAH). Which one of the following is the approximate amount of reactivity needed to stabilize power at the POAH? (Assume $\bar{\beta}_{eff} = 0.00579$.)

A. +0.10 %ΔK/K

B. +0.12 %ΔK/K

C. -0.10 %ΔK/K

D. -0.12 %ΔK/K

ANSWER: C.

TOPIC: 192008
KNOWLEDGE: K1.13 [3.4/3.6]
QID: P2470

A reactor startup is in progress following a one-month shutdown. Upon reaching criticality, the operator establishes a stable positive 1.0 dpm startup rate and stops rod motion.

After an additional 30 seconds, reactor power will be _____ and startup rate will be _____. (Assume reactor power remains below the point of adding heat.)

A. increasing; increasing

B. increasing; constant

C. constant; increasing

D. constant; constant

ANSWER: B.

TOPIC: 192008
KNOWLEDGE: K1.13 [3.4/3.6]
QID: P2668

A reactor is critical during a xenon-free reactor startup. Reactor power is increasing in the intermediate range with a stable 0.5 dpm startup rate (SUR).

Assuming <u>no</u> operator action is taken that affects reactivity, SUR will remain constant until...

A. reactor coolant temperature begins to increase, then SUR will increase.

B. core xenon-135 production becomes significant, then SUR will increase.

C. delayed neutron production rate exceeds prompt neutron production rate, then SUR will decrease.

D. fuel temperature begins to increase, then SUR will decrease.

ANSWER: D.

TOPIC: 192008
KNOWLEDGE: K1.13 [3.4/3.6]
QID: P3068 (B3068)

After taking critical data during a reactor startup, the operator establishes a positive 0.75 dpm startup rate to increase power to the point of adding heat (POAH). Which one of the following is the approximate amount of reactivity needed to stabilize reactor power at the POAH? (Assume $\bar{\beta}_{eff}$ = 0.0066.)

A. -0.10 %ΔK/K

B. -0.12 %ΔK/K

C. -0.15 %ΔK/K

D. -0.28 %ΔK/K

ANSWER: C.

TOPIC: 192008
KNOWLEDGE: K1.13 [3.4/3.6]
QID: P3935 (B3934)

After taking critical data during a reactor startup, the operator establishes a positive 0.52 dpm startup rate to increase power to the point of adding heat (POAH). Which one of the following is the approximate amount of reactivity needed to stabilize reactor power at the POAH? (Assume $\bar{\beta}_{eff}$ = 0.006.)

A. -0.01 %ΔK/K

B. -0.06 %ΔK/K

C. -0.10 %ΔK/K

D. -0.60 %ΔK/K

ANSWER: C.

TOPIC: 192008
KNOWLEDGE: K1.14 [3.1/3.1]
QID: P568

During a xenon-free reactor startup, critical data was inadvertently taken two decades below the required intermediate range (IR) power level. The critical data was taken again at the proper IR power level with the same reactor coolant temperature and boron concentration.

The critical rod position taken at the proper IR power level is _____ the critical rod position taken two decades below the proper IR power level.

A. unrelated to

B. greater than

C. the same as

D. less than

ANSWER: C.

TOPIC: 192008
KNOWLEDGE: K1.14 [3.1/3.1]
QID: P669

During a xenon-free reactor startup, critical data was inadvertently taken one decade above the required intermediate range (IR) power level. The critical data was taken again at the proper IR power level with the same reactor coolant temperature and boron concentration.

The critical rod position taken at the proper IR power level is _____ the critical rod position taken one decade above the proper IR power level.

A. less than

B. the same as

C. greater than

D. unrelated to

ANSWER: B.

TOPIC: 192008
KNOWLEDGE: K1.14 [3.1/3.1]
QID: P972

A reactor is critical several decades below the point of adding heat (POAH) when a small amount of positive reactivity is added to the core. If the exact same amount of negative reactivity is then added prior to reaching the POAH, reactor power will stabilize...

A. higher than the initial power level but below the POAH.

B. lower than the initial power level.

C. at the initial power level.

D. at the POAH.

ANSWER: A.

TOPIC: 192008
KNOWLEDGE: K1.14 [3.1/3.1]
QID: P1267

A reactor has just achieved criticality during a xenon-free reactor startup and power is being increased to take critical data. Instead of stabilizing power at 1.0×10^{-5} percent per the startup procedure, the operator inadvertently stabilizes power at 1.0×10^{-4} percent.

Assuming reactor coolant system (RCS) temperature and RCS boron concentration do not change, the critical rod height at 1.0×10^{-4} percent power will be _____ the critical rod height at 1.0×10^{-5} percent power.

A. less than

B. equal to

C. greater than

D. independent of

ANSWER: B.

TOPIC: 192008
KNOWLEDGE: K1.14 [3.1/3.1]
QID: P1268

A reactor is exactly critical two decades below the point of adding heat when -0.01 %ΔK/K of reactivity is added. If +0.01 %ΔK/K is added 2 minutes later, reactor power will stabilize at...

A. the point of adding heat.

B. the initial power level.

C. somewhat lower than the initial power level.

D. an equilibrium subcritical power level.

ANSWER: C.

TOPIC: 192008
KNOWLEDGE: K1.14 [3.1/3.1]
QID: P1669

A reactor is initially critical at 1.0×10^{-5} percent power near the middle of a fuel cycle with manual rod control when a steam generator relief valve fails open. Assume <u>no</u> operator actions are taken and the reactor does <u>not</u> trip.

When the reactor stabilizes, average reactor coolant temperature will be _____ the initial reactor coolant temperature; and reactor power will be _____ the point of adding heat.

A. equal to; greater than

B. equal to; equal to

C. less than; greater than

D. less than; equal to

ANSWER: C.

TOPIC: 192008
KNOWLEDGE: K1.14 [3.1/3.1]
QID: P2269

A reactor is critical at the point of adding heat (POAH) when a small amount of negative reactivity is added. If the same amount of positive reactivity is added approximately 5 minutes later, reactor power will...

A. increase and stabilize at the POAH.

B. quickly stabilize at a power level below the POAH.

C. continue to decrease with a -1/3 dpm startup rate until an equilibrium shutdown neutron level is reached.

D. continue to decrease with an unknown startup rate until an equilibrium shutdown neutron level is reached.

ANSWER: B.

TOPIC: 192008
KNOWLEDGE: K1.14 [3.1/3.1]
QID: P2568 (B2568)

A reactor was operating at 1.0×10^{-3} percent power with a positive 0.6 dpm startup rate when an amount of negative reactivity was inserted that caused reactor power to decrease with a negative 0.4 dpm startup rate.

If an equal amount of positive reactivity is added 5 minutes later, reactor power will...

A. increase and stabilize at the point of adding heat.

B. increase and stabilize at 1.0×10^{-3} percent power.

C. continue to decrease with a negative 0.4 dpm startup rate until an equilibrium shutdown neutron level is reached.

D. continue to decrease with an unknown startup rate until an equilibrium shutdown neutron level is reached.

ANSWER: A.

TOPIC: 192008
KNOWLEDGE: K1.14 [3.1/3.1]
QID: P3668

A reactor is slightly supercritical during a reactor startup. A short control rod withdrawal is performed to establish the desired positive startup rate. Assume that the reactor remains slightly supercritical after the control rod withdrawal, and that reactor power remains well below the point of adding heat.

Immediately after the control rod withdrawal is stopped, the startup rate will initially decrease and then...

A. stabilize at a positive value.

B. turn and slowly increase.

C. stabilize at zero.

D. continue to slowly decrease.

ANSWER: A.

TOPIC: 192008
KNOWLEDGE: K1.14 [3.1/3.1]
QID: P4033

Refer to the drawing that shows two graphs (see figure below). The axes on each graph have linear scales.

A reactor is initially critical in the source range. At 0 seconds, a constant rate addition of positive reactivity commences. Assume that reactor power remains below the point of adding heat for the entire time interval shown.

The general response of startup rate to this event is shown on graph _____; and the general response of reactor power to this event is shown on graph _____. (Note: Either graph may be chosen once, twice, or not at all.)

A. A; A

B. A; B

C. B; A

D. B; B

ANSWER: A.

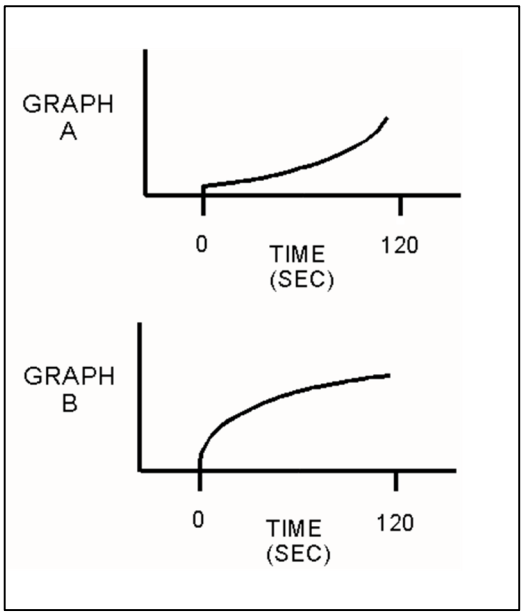

TOPIC: 192008
KNOWLEDGE: K1.14 [3.1/3.1]
QID: P4434

Refer to the drawing that shows a graph of startup rate versus time (see figure below). Both axes have linear scales.

Which one of the following events, initiated at 0 seconds, would cause the reactor response shown on the graph?

A. A step addition of positive reactivity to a reactor that is initially stable in the power range and remains in the power range for the duration of the 120-second interval shown.

B. A constant rate of positive reactivity addition to a reactor that is initially stable in the power range and remains in the power range for the duration of the 120-second interval shown.

C. A step addition of positive reactivity to a reactor that is initially critical in the source range and remains below the point of adding heat for the duration of the 120-second interval shown.

D. A constant rate of positive reactivity addition to a reactor that is initially critical in the source range and remains below the point of adding heat for the duration of the 120-second interval shown.

ANSWER: D.

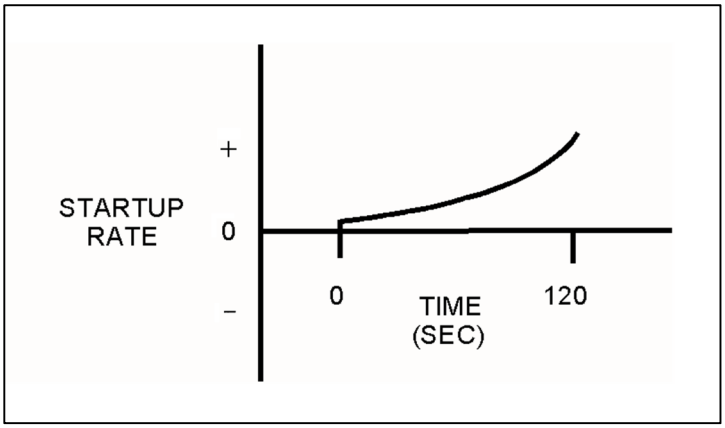

TOPIC: 192008
KNOWLEDGE: K1.14 [3.1/3.1]
QID: P4636

During a reactor startup, source range count rate is observed to double every 30 seconds. Which one of the following is the approximate startup rate?

A. 0.6 dpm

B. 0.9 dpm

C. 1.4 dpm

D. 2.0 dpm

ANSWER: A.

TOPIC: 192008
KNOWLEDGE: K1.14 [3.1/3.1]
QID: P5834 (B5833)

Refer to the drawing that shows a graph of fission rate versus time (see figure below). Both axes have linear scales.

Which one of the following events, initiated at 0 seconds, would cause the reactor response shown on the graph?

A. A step addition of positive reactivity to a reactor that is initially subcritical in the source range and remains subcritical for the duration of the 120-second interval shown.

B. A step addition of positive reactivity to a reactor that is initially critical in the source range and remains below the point of adding heat for the duration of the 120-second interval shown.

C. A step addition of positive reactivity to a reactor that is initially critical in the power range and remains in the power range for the duration of the 120-second interval shown.

D. A constant rate of positive reactivity addition to a reactor that is initially critical in the power range and remains in the power range for the duration of the 120-second interval shown.

ANSWER: B.

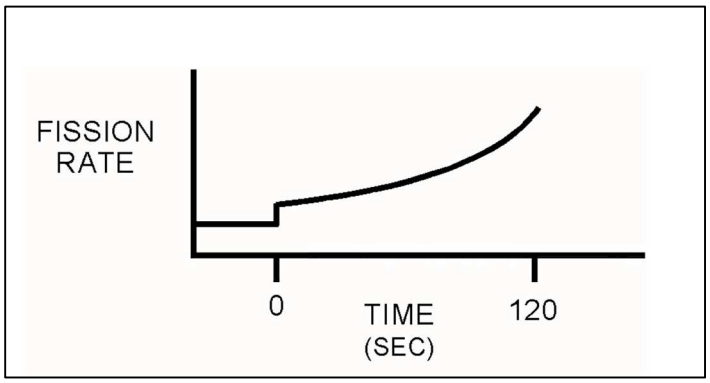

TOPIC: 192008
KNOWLEDGE: K1.14 [3.1/3.1]
QID: P6335

Refer to the drawing that shows a graph of startup rate versus time (see figure below) for a reactor. Both axes have linear scales.

Which one of the following events, initiated at 0 seconds, would cause the startup rate response shown on the graph?

A. A step addition of positive reactivity to a reactor that is initially critical in the source range. Reactor power enters the power range at 120 seconds.

B. A step addition of positive reactivity to a reactor that is initially stable in the power range. A step addition of negative reactivity is inserted at 120 seconds.

C. A controlled constant rate of positive reactivity addition to a reactor that is initially critical in the source range and remains below the point of adding heat. The positive reactivity addition ends at 120 seconds.

D. A controlled constant rate of positive reactivity addition to a reactor that is initially stable in the power range and remains in the power range. The positive reactivity addition ends at 120 seconds.

ANSWER: C.

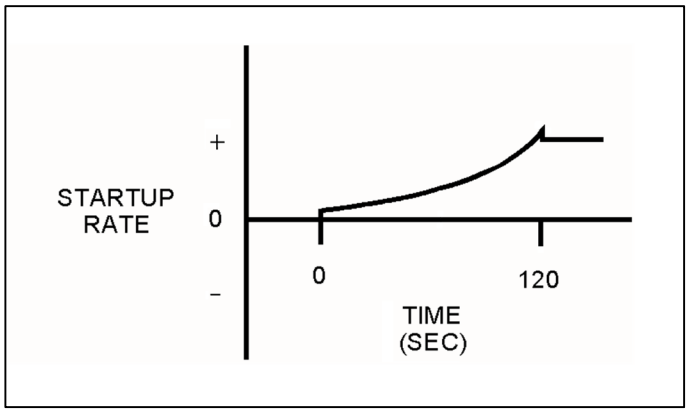

TOPIC: 192008
KNOWLEDGE: K1.15 [3.4/3.4]
QID: P569

A reactor is critical below the point of adding heat (POAH). The operator adds enough reactivity to attain a startup rate of 0.5 decades per minute. Which one of the following will decrease first when the reactor reaches the POAH?

A. Pressurizer level

B. Reactor coolant temperature

C. Reactor power

D. Startup rate

ANSWER: D.

TOPIC: 192008
KNOWLEDGE: K1.17 [3.3/3.4]
QID: P70

For a slightly supercritical reactor operating below the point of adding heat (POAH), what reactivity effects are associated with reaching the POAH?

A. There are no reactivity effects.

B. An increase in fuel temperature will begin to create a positive reactivity effect.

C. A decrease in fuel temperature will begin to create a negative reactivity effect.

D. An increase in fuel temperature will begin to create a negative reactivity effect.

ANSWER: D.

TOPIC: 192008
KNOWLEDGE: K1.17 [3.3/3.4]
QID: P471

A reactor is operating at a stable power level just above the point of adding heat. To raise reactor power to a higher stable power level, the operator must increase...

A. steam demand.

B. steam generator water levels.

C. average reactor coolant temperature.

D. reactor coolant system boron concentration.

ANSWER: A.

TOPIC: 192008
KNOWLEDGE: K1.17 [3.3/3.4]
QID: P1070

A reactor is critical at a stable power level below the point of adding heat (POAH) when a small amount of positive reactivity is added. Which one of the following reactivity coefficient(s) will stabilize reactor power at the POAH?

A. Moderator temperature only

B. Fuel temperature only

C. Moderator temperature and fuel temperature

D. Fuel temperature and moderator voids

ANSWER: C.

TOPIC: 192008
KNOWLEDGE: K1.17 [3.3/3.4]
QID: P1172

A reactor startup is in progress near the end of a fuel cycle. Reactor power is 5 x 10^{-2} percent and increasing slowly with a stable 0.3 dpm startup rate. Assuming no operator action, no reactor trip, and no steam release, what will reactor power be after 10 minutes?

A. 100 percent

B. 50 percent

C. 10 percent

D. 1 percent (point of adding heat)

ANSWER: D.

TOPIC: 192008
KNOWLEDGE: K1.17 [3.3/3.4]
QID: P1367

A reactor startup is in progress near the end of a fuel cycle. Reactor power is 5 x 10^{-3} percent and increasing slowly with a stable 0.3 dpm startup rate. Assuming no operator action, no reactor trip, and no steam release, what will reactor power be after 10 minutes?

A. Below the point of adding heat (POAH).

B. At the POAH.

C. Above the POAH but less than 50 percent.

D. Greater than 50 percent.

ANSWER: B.

TOPIC: 192008
KNOWLEDGE: K1.17 [3.3/3.4]
QID: P1465

Near the end of a fuel cycle, a reactor required three hours to increase power from 70 percent to 100 percent using only reactor coolant system (RCS) boron dilution at the maximum rate to control RCS temperature.

Following a refueling outage, the same reactor power change performed under the same conditions will require a _____ period of time because the rate at which RCS boron concentration can be decreased at the beginning of a fuel cycle is _____.

A. longer; slower

B. shorter; slower

C. longer; faster

D. shorter; faster

ANSWER: D.

TOPIC: 192008
KNOWLEDGE: K1.17 [3.3/3.4]
QID: P1470 (B1371)

With a reactor on a constant startup rate, which one of the following power changes requires the <u>longest</u> time to occur?

A. 1.0×10^{-8} percent to 4.0×10^{-8} percent

B. 5.0×10^{-8} percent to 1.5×10^{-7} percent

C. 2.0×10^{-7} percent to 3.5×10^{-7} percent

D. 4.0×10^{-7} percent to 6.0×10^{-7} percent

ANSWER: A.

TOPIC: 192008
KNOWLEDGE: K1.17 [3.3/3.4]
QID: P1567 (B1570)

With a reactor on a constant startup rate, which one of the following power changes requires the <u>least</u> amount of time to occur?

A. 1.0×10^{-8} percent to 6.0×10^{-8} percent

B. 1.0×10^{-7} percent to 2.0×10^{-7} percent

C. 2.0×10^{-7} percent to 3.5×10^{-7} percent

D. 4.0×10^{-7} percent to 6.0×10^{-7} percent

ANSWER: D.

TOPIC: 192008
KNOWLEDGE: K1.17 [3.3/3.4]
QID: P2069 (B2072)

With a reactor on a constant startup rate, which one of the following power changes requires the <u>longest</u> amount of time to occur?

A. 3.0×10^{-8} percent to 5.0×10^{-8} percent

B. 5.0×10^{-8} percent to 1.5×10^{-7} percent

C. 1.5×10^{-7} percent to 3.0×10^{-7} percent

D. 3.0×10^{-7} percent to 6.0×10^{-7} percent

ANSWER: B.

TOPIC: 192008
KNOWLEDGE: K1.17 [3.3/3.4]
QID: P2168

A reactor is initially stable at the point of adding heat (POAH) with the average reactor coolant temperature at 550°F during a startup. Control rods are manually withdrawn a few inches to increase steam generator steaming rate.

When the reactor stabilizes, reactor power will be _____ the POAH, and average reactor coolant temperature will be _____ 550°F.

A. greater than; equal to

B. greater than; greater than

C. equal to; equal to

D. equal to; greater than

ANSWER: B.

TOPIC: 192008
KNOWLEDGE: K1.17 [3.3/3.4]
QID: P2770 (B2770)

With a reactor on a constant startup rate, which one of the following power changes requires the <u>least</u> amount of time to occur?

A. 3.0×10^{-8} percent to 5.0×10^{-8} percent

B. 5.0×10^{-8} percent to 1.5×10^{-7} percent

C. 1.5×10^{-7} percent to 3.0×10^{-7} percent

D. 3.0×10^{-7} percent to 6.0×10^{-7} percent

ANSWER: A.

TOPIC: 192008
KNOWLEDGE: K1.18 [3.6/3.5]
QID: P869

A nuclear power plant is operating at 100 percent power near the end of a fuel cycle with all control systems in manual. The reactor operator inadvertently adds 100 gallons of boric acid (4 percent by weight) to the reactor coolant system (RCS).

Which one of the following will occur as a result of the boric acid addition? (Assume a constant main generator output.)

A. Pressurizer level will decrease and stabilize at a lower value.

B. RCS pressure will increase and stabilize at a higher value.

C. Reactor power will decrease and stabilize at a lower value.

D. Average RCS temperature will increase and stabilize at a higher value.

ANSWER: A.

TOPIC: 192008
KNOWLEDGE: K1.18 [3.6/3.5]
QID: P1071

A nuclear power plant was operating with the following initial steady-state conditions:

Power level	=	100 percent
Reactor coolant boron concentration	=	620 ppm
Average reactor coolant temperature	=	587°F

After a load decrease, the current steady-state conditions are as follows:

Power level	=	80 percent
Reactor coolant boron concentration	=	650 ppm
Average reactor coolant temperature	=	577°F

Given the following information, how much reactivity was added by control rod movement during the load decrease? (Disregard any changes in fission product poison reactivity.)

Differential boron worth	=	-1.0×10^{-2}	%ΔK/K/ppm
Total power coefficient	=	-1.5×10^{-2}	%ΔK/K/%
Moderator temperature coefficient	=	-2.0×10^{-2}	%ΔK/K/°F

A. 0.0 %ΔK/K

B. -0.2 %ΔK/K

C. -0.6 %ΔK/K

D. -0.8 %ΔK/K

ANSWER: A.

TOPIC: 192008
KNOWLEDGE: K1.18 [3.6/3.5]
QID: P1871

A nuclear power plant was operating with the following initial steady-state conditions:

Power level	=	100 percent
Reactor coolant boron concentration	=	630 ppm
Average reactor coolant temperature	=	582°F

After a load decrease, the current steady-state conditions are as follows:

Power level	=	80 percent
Reactor coolant boron concentration	=	640 ppm
Average reactor coolant temperature	=	577°F

Given the following values, how much reactivity was added by control rod movement during the load decrease? (Assume fission product poison reactivity does not change.)

Total power coefficient	=	-1.5×10^{-2}	%ΔK/K/%
Moderator temperature coefficient	=	-2.0×10^{-2}	%ΔK/K/°F
Differential boron worth	=	-1.5×10^{-2}	%ΔK/K/ppm

A. +0.15 %ΔK/K

B. +0.25 %ΔK/K

C. -0.15 %ΔK/K

D. -0.25 %ΔK/K

ANSWER: C.

TOPIC: 192008
KNOWLEDGE: K1.18 [3.6/3.5]
QID: P1968

A nuclear power plant was operating with the following initial steady-state conditions:

Power level	=	80 percent
Reactor coolant boron concentration	=	630 ppm
Average reactor coolant temperature	=	582°F

After a normal load decrease, the current steady-state conditions are as follows:

Power level	=	50 percent
Reactor coolant boron concentration	=	650 ppm
Average reactor coolant temperature	=	572°F

Given the following values, how much reactivity was added by control rod movement during the load decrease? (Assume fission product poison reactivity does not change.)

Total power coefficient	=	-1.5×10^{-2}	%ΔK/K/%
Moderator temperature coefficient	=	-2.0×10^{-2}	%ΔK/K/°F
Differential boron worth	=	-1.5×10^{-2}	%ΔK/K/ppm

A. -0.5 %ΔK/K

B. -0.15 %ΔK/K

C. -0.25 %ΔK/K

D. -0.35 %ΔK/K

ANSWER: B.

TOPIC: 192008
KNOWLEDGE: K1.18 [3.6/3.5]
QID: P2070

A nuclear power plant was operating with the following initial steady-state conditions:

Power level	=	100 percent
Reactor coolant boron concentration	=	620 ppm
Average reactor coolant temperature	=	587°F

After a load decrease, the current steady-state conditions are as follows:

Power level	=	80 percent
Reactor coolant boron concentration	=	630 ppm
Average reactor coolant temperature	=	577°F

Given the following values, how much reactivity was added by control rod movement during the load decrease? (Assume fission product poison reactivity does not change.)

Total power coefficient	=	-1.5×10^{-2}	%ΔK/K/%
Moderator temperature coefficient	=	-2.0×10^{-2}	%ΔK/K/°F
Differential boron worth	=	-1.0×10^{-2}	%ΔK/K/ppm

A. -0.2 %ΔK/K

B. +0.2 %ΔK/K

C. -0.4 %ΔK/K

D. +0.4 %ΔK/K

ANSWER: A.

TOPIC: 192008
KNOWLEDGE: K1.18 [3.6/3.5]
QID: P3269

One week after a refueling outage, a nuclear power plant is currently operating at 80 percent power with control rods fully withdrawn. During the outage, the entire core was replaced by new fuel assemblies and new burnable poison assemblies were installed at various locations.

Assume reactor power and control rod position do not change during the next week. If no operator action is taken, how and why will average reactor coolant temperature change during the next week?

A. Decrease slowly, due to fuel burnup only.

B. Decrease slowly, due to fuel burnup and fission product poison buildup.

C. Increase slowly, due to burnable poison burnout only.

D. Increase slowly, due to burnable poison burnout and fission product poison decay.

ANSWER: B.

TOPIC: 192008
KNOWLEDGE: K1.19 [3.5/3.6]
QID: P570

How do the following parameters change during a normal ramp of reactor power from 15 percent to 75 percent?

	Main Turbine First Stage Pressure	Reactor Coolant System Boron Concentration
A.	Increases	Decreases
B.	Decreases	Decreases
C.	Increases	Increases
D.	Decreases	Increases

ANSWER: A.

TOPIC: 192008
KNOWLEDGE: K1.19 [3.5/3.6]
QID: P1672 (B1671)

A refueling outage has just been completed, during which one-third of the core was replaced with new fuel assemblies. A reactor startup has been performed to begin the sixth fuel cycle, and reactor power is being increased to 100 percent.

Which one of the following pairs of reactor fuels will provide the greatest contribution to core heat production when the reactor reaches 100 percent power?

A. U-235 and U-238

B. U-238 and Pu-239

C. U-235 and Pu-239

D. U-235 and Pu-241

ANSWER: C.

TOPIC: 192008
KNOWLEDGE: K1.19 [3.5/3.6]
QID: P2272

A nuclear power plant is operating at 100 percent power near the end of a fuel cycle. The greatest contribution to core heat production is being provided by the fission of...

A. U-235 and U-238.

B. U-235 and Pu-239.

C. U-238 and Pu-239.

D. U-238 and Pu-241.

ANSWER: B.

TOPIC: 192008
KNOWLEDGE: K1.19 [3.5/3.6]
QID: P2868

A refueling outage has just been completed, during which the entire core was offloaded and replaced with new fuel. A reactor startup has been performed and power is being increased to 100 percent.

Which one of the following pairs of reactor fuels will provide the greatest contribution to core heat production when the reactor reaches 100 percent power?

A. U-235 and U-238

B. U-238 and Pu-239

C. U-235 and Pu-239

D. U-235 and Pu-241

ANSWER: A.

TOPIC: 192008
KNOWLEDGE: K1.20 [3.8/3.9]
QID: P271

A reactor is critical at 2.0×10^{-8} percent power. The operator withdraws rods as necessary to immediately establish and maintain a positive 0.1 dpm startup rate. How long will it take the reactor to reach 7.0×10^{-8} percent power?

A. 2.4 minutes

B. 5.4 minutes

C. 7.4 minutes

D. 10.4 minutes

ANSWER: B.

TOPIC: 192008
KNOWLEDGE: K1.20 [3.8/3.9]
QID: P2869

A reactor is critical at 3.0×10^{-8} percent power. The operator withdraws rods as necessary to immediately establish and maintain a positive 0.1 dpm startup rate. How long will it take the reactor to reach 7.0×10^{-8} percent power?

A. 3.7 minutes

B. 5.4 minutes

C. 6.7 minutes

D. 8.4 minutes

ANSWER: A.

TOPIC: 192008
KNOWLEDGE: K1.20 [3.8/3.9]
QID: P2970

A reactor startup is in progress and criticality has just been achieved. After recording the critical rod heights, the operator withdraws control rods for 20 seconds to establish a stable positive 0.5 dpm startup rate (SUR). One minute later (prior to reaching the point of adding heat), the operator inserts the same control rods for 25 seconds.

During the rod insertion, when will the SUR become negative?

A. Immediately when the control rod insertion is initiated.

B. After the control rods pass through the critical rod height.

C. Just as the control rods pass through the critical rod height.

D. Prior to the control rods passing through the critical rod height.

ANSWER: D.

TOPIC: 192008
KNOWLEDGE: K1.21 [3.6/3.8]
QID: P272

A nuclear power plant has been operating at 75 percent power for several weeks when a partial main steam line break occurs that releases 3 percent of rated steam flow. Assuming no operator or automatic actions occur, reactor power will stabilize _____ 75 percent; and average reactor coolant temperature will stabilize at a _____ temperature.

A. greater than; higher

B. at; higher

C. greater than; lower

D. at; lower

ANSWER: C.

TOPIC: 192008
KNOWLEDGE: K1.21 [3.6/3.8]
QID: P368

A reactor is critical at a stable power level below the point of adding heat (POAH). An unisolable steam line break occurs and 3 percent of rated steam flow is escaping.

Assuming no reactor trip, which one of the following describes the response of the reactor?

A. Reactor coolant average temperature will decrease. The reactor will become subcritical.

B. Reactor coolant average temperature will remain the same. The reactor will stabilize at 3 percent power.

C. Reactor coolant average temperature will decrease. The reactor will stabilize at 3 percent power.

D. Reactor coolant average temperature will decrease. Reactor power will not change because the reactor was below the POAH.

ANSWER: C.

TOPIC: 192008
KNOWLEDGE: K1.21 [3.6/3.8]
QID: P1370

A nuclear power plant has been operating at 80 percent power for several weeks when a partial steam line break occurs that releases 2 percent of rated steam flow. Main turbine load and control rod position remain the same.

Assuming no operator or protective actions occur, when the plant stabilizes reactor power will be _____; and average reactor coolant temperature will be _____.

A. higher; higher

B. unchanged; higher

C. higher; lower

D. unchanged; lower

ANSWER: C.

TOPIC: 192008
KNOWLEDGE: K1.21 [3.6/3.8]
QID: P1570

A nuclear power plant is operating at steady-state 85 percent power and 580°F average reactor coolant temperature (T_{ave}) near the end of a fuel cycle. A failure of the turbine control system opens the turbine control valves to admit 10 percent more steam flow to the main turbine. No operator actions occur and no protective system actuations occur. Rod control is in manual.

Following the transient, reactor power will stabilize _____ 85 percent; and T_{ave} will stabilize _____ 580°F.

A. above; above

B. above; below

C. below; above

D. below; below

ANSWER: B.

TOPIC: 192008
KNOWLEDGE: K1.21 [3.6/3.8]
QID: P2372

A nuclear power plant is operating at steady-state 90 percent power near the end of a fuel cycle with manual rod control when a turbine control system malfunction opens the main turbine steam inlet valves an additional 5 percent. Reactor power will initially...

A. increase, because the rate of neutron absorption in the moderator initially decreases.

B. increase, because the rate of neutron absorption at U-238 resonant energies initially decreases.

C. decrease, because the rate of neutron absorption in the moderator initially increases.

D. decrease, because the rate of neutron absorption at U-238 resonant energies initially increases.

ANSWER: B.

TOPIC: 192008
KNOWLEDGE: K1.21 [3.6/3.8]
QID: P2671

A nuclear power plant is operating at 100 percent power near the end of a fuel cycle when the main turbine trips. If the reactor does <u>not</u> immediately trip, which one of the following will act <u>first</u> to change reactor power?

A. Positive reactivity addition from the Doppler coefficient will cause reactor power to initially increase.

B. Positive reactivity addition from the moderator temperature coefficient will cause reactor power to initially increase.

C. Negative reactivity addition from the Doppler coefficient will cause reactor power to initially decrease.

D. Negative reactivity addition from the moderator temperature coefficient will cause reactor power to initially decrease.

ANSWER: D.

TOPIC: 192008
KNOWLEDGE: K1.21 [3.6/3.8]
QID: P2771

A nuclear power plant is operating at steady-state 80 percent power and 580°F average reactor coolant temperature (T_{ave}) near the end of a fuel cycle with manual rod control. A turbine control system malfunction partially closes the turbine control valves resulting in 5 percent less steam flow to the main turbine. No operator actions occur and no protective system actuations occur.

Following the transient, reactor power will stabilize _____ 80 percent; and T_{ave} will stabilize _____ 580°F.

A. at; above

B. at; below

C. below; above

D. below; below

ANSWER: C.

TOPIC: 192008
KNOWLEDGE: K1.21 [3.6/3.8]
QID: P3171

A nuclear power plant is operating at steady-state 60 percent power in the middle of a fuel cycle with manual rod control when a turbine control system malfunction closes the turbine steam inlet valves an additional 5 percent. Which one of the following is most responsible for the initial reactor power decrease?

A. The rate of neutron absorption by core xenon-135 initially increases.

B. The rate of neutron absorption by the moderator initially increases.

C. The rate of neutron absorption by the fuel at resonance energies initially increases.

D. The rate of neutron absorption by the boron in the reactor coolant initially increases.

ANSWER: C.

TOPIC: 192008
KNOWLEDGE: K1.21 [3.6/3.8]
QID: P3484

A multi-loop nuclear power plant is operating at steady-state 50 percent power with manual rod control when the main steam isolation valve (MSIV) for one steam generator inadvertently closes. Assume that no reactor trip or other protective action occurs, and no operator action is taken.

Immediately after the MSIV closure, the cold leg temperature (T_{cold}) in the reactor coolant loop with the closed MSIV will initially _____; and the T_{cold} in a loop with an open MSIV will initially _____.

A. decrease; increase

B. decrease; decrease

C. increase; increase

D. increase; decrease

ANSWER: D.

TOPIC: 192008
KNOWLEDGE: K1.21 [3.6/3.8]
QID: P4035

A nuclear power plant is operating at steady-state 60 percent power in the middle of a fuel cycle with manual rod control when a turbine control system malfunction opens the main turbine steam inlet valves an additional 5 percent. Which one of the following is responsible for the initial reactor power increase?

A. The rate of neutron absorption by core Xe-135 initially decreases.

B. The rate of neutron absorption in the moderator initially decreases.

C. The rate of neutron absorption at U-238 resonance energies initially decreases.

D. The rate of neutron absorption by the boron in the reactor coolant initially decreases.

ANSWER: C.

TOPIC: 192008
KNOWLEDGE: K1.21 [3.6/3.8]
QID: P4735

A nuclear power plant is initially operating at steady-state 100 percent reactor power with the main generator producing 1,100 MW. A power grid disturbance occurs and appropriate operator actions are taken. The plant is stabilized with the following current conditions:

- Main generator output is 385 MW.
- Steam dump/bypass system is discharging 15 percent of rated steam flow to the main condenser.
- All reactor coolant system parameters are in their normal ranges.

What is the approximate current reactor power level?

A. 15 percent

B. 35 percent

C. 50 percent

D. 65 percent

ANSWER: C.

TOPIC: 192008
KNOWLEDGE: K1.22 [2.6/3.8]
QID: P1072

A high boron concentration is necessary at the beginning of a fuel cycle to...

A. compensate for excess reactivity in the fuel.

B. produce a negative moderator temperature coefficient.

C. flatten the axial and radial neutron flux distributions.

D. maximize control rod worth until fission product poisons accumulate.

ANSWER: A.

TOPIC: 192008
KNOWLEDGE: K1.22 [2.6/3.8]
QID: P2570

During a refueling outage, new fuel assemblies with higher enrichments of U-235 were loaded to prolong the fuel cycle from 12 months to 16 months. What is a possible consequence of offsetting all the excess positive reactivity of the new fuel assemblies with a higher concentration of boron in the reactor coolant?

A. Boron may precipitate out of the reactor coolant during a cooldown.

B. An RCS temperature decrease may result in a negative reactivity addition.

C. Power changes requiring dilution of RCS boron may take longer.

D. The differential boron worth ($\Delta K/K$/ppm) may become positive.

ANSWER: B.

TOPIC: 192008
KNOWLEDGE: K1.23 [2.9/3.1]
QID: P71 (B72)

Shortly after a reactor trip, reactor power indicates 5.0×10^{-2} percent when a stable negative startup rate is attained. Approximately how much additional time is required for reactor power to decrease to 5.0×10^{-3} percent?

A. 90 seconds

B. 180 seconds

C. 270 seconds

D. 360 seconds

ANSWER: B.

TOPIC: 192008
KNOWLEDGE: K1.23 [2.9/3.1]
QID: P572 (B2272)

A nuclear power plant has been operating at 100 percent power for several weeks when a reactor trip occurs. How much time will be required for core decay heat production to decrease to one percent power following the trip?

A. 1 to 8 seconds

B. 1 to 8 minutes

C. 1 to 8 hours

D. 1 to 8 days

ANSWER: C.

TOPIC: 192008
KNOWLEDGE: K1.23 [2.9/3.1]
QID: P770 (B771)

Which one of the following determines the value of the stable negative startup rate observed shortly after a reactor trip?

A. The shortest-lived delayed neutron precursors.

B. The longest-lived delayed neutron precursors.

C. The shutdown margin just prior to the trip.

D. The worth of the inserted control rods.

ANSWER: B.

TOPIC: 192008
KNOWLEDGE: K1.23 [2.9/3.1]
QID: P1965 (B1369)

Shortly after a reactor trip, reactor power indicates 1.0×10^{-3} percent when a stable negative startup rate is attained. Reactor power will decrease to 1.0×10^{-4} percent in approximately _____ seconds.

A. 380

B. 280

C. 180

D. 80

ANSWER: C.

TOPIC: 192008
KNOWLEDGE: K1.23 [2.9/3.1]
QID: P2171 (B1770)

Following a reactor trip, reactor power indicates 0.1 percent when the typical stable post-trip startup rate is observed. Approximately how much additional time is required for reactor power to decrease to 0.05 percent?

A. 24 seconds

B. 55 seconds

C. 173 seconds

D. 240 seconds

ANSWER: B.

TOPIC: 192008
KNOWLEDGE: K1.23 [2.9/3.1]
QID: P2672 (B131)

Which one of the following approximates the fission product decay heat produced in a reactor at one second and one hour following a reactor trip from long-term operation at 100 percent power?

	One Second	One Hour
A.	15 percent	1 percent
B.	7 percent	1 percent
C.	1 percent	0.1 percent
D.	0.5 percent	0.1 percent

ANSWER: B.

TOPIC: 192008
KNOWLEDGE: K1.23 [2.9/3.1]
QID: P2768 (B2769)

Reactors A and B are identical and have operated at 100 percent power for six months when a reactor trip occurs simultaneously on both reactors. All control rods fully insert, except for one reactor B control rod that remains fully withdrawn.

Which reactor, if any, will have the smaller negative startup rate five minutes after the trip, and why?

A. Reactor A, due to the greater shutdown reactivity.

B. Reactor B, due to the smaller shutdown reactivity.

C. Both reactors will have the same startup rate because both reactors will be stable at a power level low in the source range.

D. Both reactors will have the same startup rate because only the longest-lived delayed neutron precursors will be releasing fission neutrons.

ANSWER: D.

TOPIC: 192008
KNOWLEDGE: K1.23 [2.9/3.1]
QID: P2969

Reactors A and B are identical and have operated at 100 percent power for six months when a reactor trip occurs simultaneously on both reactors. All reactor A control rods fully insert. One reactor B control rod sticks fully withdrawn.

Which reactor, if any, will have the smaller negative startup rate five minutes after the trip, and why?

A. Reactor A, because its delayed neutron fraction will be smaller.

B. Reactor B, because its delayed neutron fraction will be larger.

C. Both reactors will have the same startup rate because both reactors will be stable at a power level low in the source range.

D. Both reactors will have the same startup rate because only the longest-lived delayed neutron precursors will be releasing fission neutrons.

ANSWER: D.

TOPIC: 192008
KNOWLEDGE: K1.23 [2.9/3.1]
QID: P3271 (B3271)

Reactors A and B are identical and have operated at 100 percent power for six months when a reactor trip occurs simultaneously on both reactors. All reactor A control rods fully insert. One reactor B control rod sticks fully withdrawn, but all others fully insert.

When compared to reactor B at five minutes after the trip, the fission rate in reactor A will be _____; and the startup rate in reactor A will be _____.

A. the same; more negative

B. the same; the same

C. smaller; more negative

D. smaller; the same

ANSWER: D.

TOPIC: 192008
KNOWLEDGE: K1.23 [2.9/3.1]
QID: P3468

A reactor is critical just below the point of adding heat when an inadvertent reactor trip occurs. All control rods fully insert except for one rod, which remains fully withdrawn. Five minutes after the reactor trip, with reactor startup rate (SUR) stable at approximately -1/3 dpm, the remaining withdrawn control rod suddenly drops (fully inserts).

Which one of the following describes the reactor response to the drop of the last control rod?

A. SUR will remain stable at approximately -1/3 dpm.

B. SUR will immediately become more negative, and then return to and stabilize at approximately -1/3 dpm.

C. SUR will immediately become more negative, and then turn and stabilize at a value more negative than -1/3 dpm.

D. SUR will immediately become more negative, and then turn and stabilize at a value less negative than -1/3 dpm.

ANSWER: B.

TOPIC: 192008
KNOWLEDGE: K1.23 [2.9/3.1]
QID: P7035

A nuclear power plant is operating at steady-state 100 percent power when a reactor trip occurs. As a result of the trip, the core neutron flux will initially decrease at a startup rate that is much _____ negative than -1/3 dpm; the startup rate will become approximately -1/3 dpm about _____ minutes after the trip.

A. less; 3

B. less; 30

C. more; 3

D. more; 30

ANSWER: C.

TOPIC: 192008
KNOWLEDGE: K1.23 [2.9/3.1]
QID: P7618 (B7618)

Refer to the graph of neutron flux versus time (see figure below) for a nuclear power plant reactor that experienced a reactor trip from extended full power operation at time = 0 seconds. The neutron flux axis has a logarithmic scale while the time axis has a linear scale.

Which section(s) of the curve has/have a slope that is primarily determined by the production rate of delayed neutrons?

A. B only

B. B and C

C. C only

D. C and D

ANSWER: B.

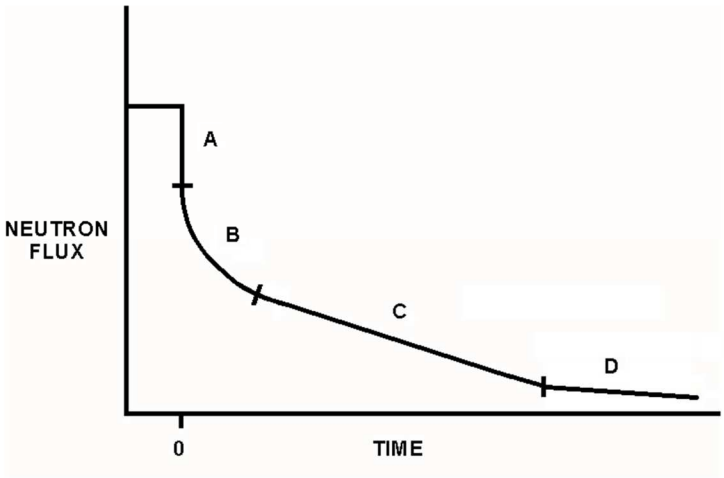

TOPIC: 192008
KNOWLEDGE: K1.23 [2.9/3.1]
QID: P7658 (B7658)

Refer to the graph of neutron flux versus time (see figure below) for a nuclear power plant that experienced a reactor trip from extended full power operation at time = 0 seconds. The neutron flux axis has a logarithmic scale while the time axis has a linear scale.

In which section of the curve does the production rate of source neutrons primarily determine the slope of the curve?

A. A

B. B

C. C

D. D

ANSWER: D.

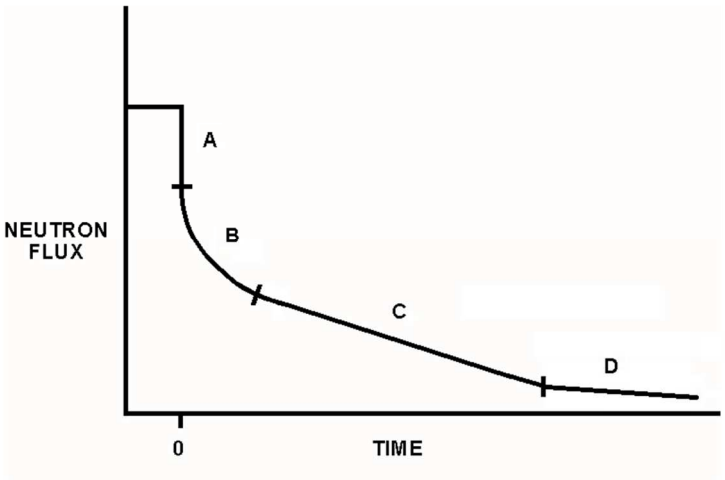

TOPIC: 192008
KNOWLEDGE: K1.23 (2.9/3.1)
QID: P7708 (B7708)

A reactor was operating for several months at 100 percent power when a reactor trip occurred. Which one of the following is primarily responsible for the startup rate value 2 minutes after the trip?

A. The K_{eff} in the core.

B. The rate of source neutron production in the core.

C. The effective delayed neutron fraction in the core.

D. The decay rates of the delayed neutron precursors in the core.

ANSWER: D.

TOPIC: 192008
KNOWLEDGE: K1.24 [3.5/3.6]
QID: P672 (B1969)

A reactor is critical below the point of adding heat when a fully withdrawn control rod fully inserts into the core. Assuming no operator or automatic actions, core neutron flux will slowly decrease to...

A. zero.

B. an equilibrium value less than the source neutron flux.

C. an equilibrium value greater than the source neutron flux.

D. a slightly lower value, then slowly return to the initial value.

ANSWER: C.

TOPIC: 192008
KNOWLEDGE: K1.24 [3.5/3.6]
QID: P1472

A reactor is critical just below the point of adding heat when a single fully withdrawn control rod drops into the core. Assuming no operator or automatic actions occur, when the plant stabilizes reactor power will be _____; and average reactor coolant temperature will be _____.

A. the same; the same

B. the same; lower

C. lower; the same

D. lower; lower

ANSWER: C.

TOPIC: 192008
KNOWLEDGE: K1.24 [3.5/3.6]
QID: P5136

A reactor is initially critical in the source range during a reactor startup when the control rods are inserted a small amount. Reactor startup rate stabilizes at -0.15 dpm. Assuming startup rate remains constant, how long will it take for source range count rate to decrease by one-half?

A. 0.3 minutes

B. 2.0 minutes

C. 3.3 minutes

D. 5.0 minutes

ANSWER: B.

TOPIC: 192008
KNOWLEDGE: K1.25 [2.9/3.1]
QID: P772

Which one of the following is the reason for inserting control rods in a predetermined sequence during a normal reactor shutdown?

A. To prevent uneven fuel burnup.

B. To prevent an excessive reactor coolant system cooldown rate.

C. To prevent abnormally high local power peaks.

D. To prevent divergent xenon-135 oscillations.

ANSWER: C.

TOPIC: 192008
KNOWLEDGE: K1.25 [2.9/3.1]
QID: P2971

Which one of the following describes the process for inserting control rods during a normal reactor shutdown?

A. Control rods are inserted in reverse order, one bank at a time, to maintain acceptable power distribution.

B. Control rods are inserted in reverse order, one bank at a time, to maintain a rapid shutdown capability from the remainder of the control rods.

C. Control rods are inserted in reverse order, in a bank overlapping sequence, to maintain a relatively constant differential control rod worth.

D. Control rods are inserted in reverse order, in a bank overlapping sequence, to limit the amount of positive reactivity added during a rod ejection accident.

ANSWER: C.

TOPIC: 192008
KNOWLEDGE: K1.26 [3.1/3.2]
QID: P370 (B372)

After one month of operation at 100 percent power, the fraction of rated thermal power being produced from the decay of fission products in an operating reactor is...

A. greater than 10 percent.

B. greater than 5 percent, but less than 10 percent.

C. greater than 1 percent, but less than 5 percent.

D. less than 1 percent.

ANSWER: B.

TOPIC: 192008
KNOWLEDGE: K1.27 [3.1/3.4]
QID: P132

The magnitude of decay heat generation is determined primarily by...

A. core burnup.

B. power history.

C. final power at shutdown.

D. control rod worth at shutdown.

ANSWER: B.

TOPIC: 192008
KNOWLEDGE: K1.27 [3.1/3.4]
QID: P1272 (B1372)

Following a reactor shutdown from three months of operation at 100 percent power, the core decay heat production rate will depend on the...

A. amount of fuel that has been depleted.

B. decay rate of the fission product poisons.

C. time elapsed since K_{eff} decreased below 1.0.

D. decay rate of the photoneutron source.

ANSWER: C.

TOPIC: 192008
KNOWLEDGE: K1.27 [3.1/3.4]
QID: P1372

A nuclear power plant had been operating at 100 percent power for six months when a steam line rupture occurred that resulted in a reactor trip and all steam generators (SGs) blowing down (emptying) after approximately 1 hour. The SG blowdown caused reactor coolant system (RCS) temperature to decrease to 400°F, at which time the SGs became empty and an RCS heatup began.

Given the following information:

Reactor rated thermal power	=	3,400 MWt
Decay heat rate	=	1.0 percent rated thermal power
Reactor coolant pump heat input to the RCS	=	15 MWt
RCS total heat loss rate	=	Negligible
RCS specific heat	=	1.1 Btu/lbm-°F
RCS inventory (less pressurizer)	=	475,000 lbm

What will the average RCS heatup rate be during the 5 minutes immediately after all SGs became empty? (Assume <u>no</u> heat removal from the RCS.)

A. 8 to 15°F/hr

B. 50 to 75°F/hr

C. 100 to 150°F/hr

D. 300 to 350°F/hr

ANSWER: D.

TOPIC: 192008
KNOWLEDGE: K1.27 [3.1/3.4]
QID: P2572

A nuclear power plant had been operating at 100 percent power for six months when a steam line rupture occurred that resulted in a reactor trip and all steam generators (SGs) blowing down (emptying) after approximately 1 hour. The SG blowdown caused reactor coolant system (RCS) temperature to decrease to 400°F, at which time the SGs became empty and an RCS heatup began.

Given the following information:

Reactor rated thermal power	=	2,400 MWt
Decay heat rate	=	1.0 percent rated thermal power
Reactor coolant pump heat input to the RCS	=	13 MWt
RCS total heat loss rate	=	2.4 MWt
RCS specific heat	=	1.1 Btu/lbm-°F
RCS inventory (less pressurizer)	=	325,000 lbm

What will the average RCS heatup rate be during the 5 minutes immediately after all SGs became empty? (Assume no heat removal from the RCS.)

A. 8 to 15°F/hr

B. 25 to 50°F/hr

C. 80 to 150°F/hr

D. 300 to 400°F/hr

ANSWER: D.

TOPIC: 192008
KNOWLEDGE: K1.27 [3.1/3.4]
QID: P2872 (B2872)

A reactor has been shut down for several weeks when a loss of all AC power results in a loss of forced coolant flow in the reactor coolant system (RCS).

Given the following information:

Reactor rated thermal power	=	2,800 MWt
Decay heat rate	=	0.2 percent rated thermal power
RCS ambient heat loss rate	=	2.4 MWt
RCS specific heat	=	1.1 Btu/lbm-°F
RCS inventory (less pressurizer)	=	325,000 lbm

What will the average reactor coolant heatup rate be during the 20 minutes immediately after forced decay heat removal flow is lost? Assume the RCS remains in thermal equilibrium and that <u>only</u> ambient losses are removing heat from the RCS.

A. Less than 25°F/hour

B. 26 to 50°F/hour

C. 51 to 75°F/hour

D. More than 76°F/hour

ANSWER: B.

TOPIC: 192008
KNOWLEDGE: K1.27 [3.1/3.4]
QID: P2972 (B2972)

A nuclear power plant has been operating for one hour at 50 percent power following six months of operation at steady-state 100 percent power. What percentage of rated thermal power is currently being generated by fission product decay?

A. 1 percent to 2 percent

B. 3 percent to 5 percent

C. 6 percent to 8 percent

D. 9 percent to 11 percent

ANSWER: B.

TOPIC: 192008
KNOWLEDGE: K1.27 [3.1/3.4]
QID: P4336 (B4336)

A nuclear power plant has been operating at 100 percent power for six months when a reactor trip occurs. Which one of the following describes the source(s) of core heat generation 30 minutes after the reactor trip?

A. Fission product decay is the <u>only</u> significant source of core heat generation.

B. Delayed neutron-induced fission is the <u>only</u> significant source of core heat generation.

C. Fission product decay and delayed neutron-induced fission are <u>both</u> significant sources and produce approximately equal rates of core heat generation.

D. Fission product decay and delayed neutron-induced fission are <u>both</u> insignificant sources and generate core heat at rates that are less than the rate of ambient heat loss from the core.

ANSWER: A.

TOPIC: 192008
KNOWLEDGE: K1.27 [3.1/3.4]
QID: P7638

A nuclear power plant has been operating at 100 percent power for six months when a reactor trip occurs. Which one of the following describes the source(s) of core heat generation 1 minute after the reactor trip?

A. Fission product decay is the only heat source capable of increasing fuel temperature.

B. Delayed neutron-induced fission is the only heat source capable of increasing fuel temperature.

C. Both fission product decay and delayed neutron-induced fission are capable of increasing fuel temperature.

D. Neither fission product decay nor delayed neutron-induced fission are capable of increasing fuel temperature.

ANSWER: C.

TOPIC: 193001
KNOWLEDGE: K1.01 [2.5/2.7]
QID: P73

An atmospheric pressure of 15.0 psia is equivalent to...

A. 30.0 psig.

B. 29.4 psig.

C. 14.7 psig.

D. 0.0 psig.

ANSWER: D.

TOPIC: 193001
KNOWLEDGE: K1.01 [2.5/2.7]
QID: P273

A pressure gauge on a condenser reads 27.0 inches Hg vacuum. What is the absolute pressure corresponding to this vacuum? (Assume a standard atmospheric pressure of 15.0 psia.)

A. 14.0 psia

B. 13.5 psia

C. 1.5 psia

D. 1.0 psia

ANSWER: C.

TOPIC: 193001
KNOWLEDGE: K1.01 [2.5/2.7]
QID: P473

Assuming a standard atmospheric pressure of 15.0 psia, 5.0 inches Hg vacuum is equivalent to...

A. 2.5 psia.

B. 5.0 psia.

C. 10.0 psia.

D. 12.5 psia.

ANSWER: D.

TOPIC: 193001
KNOWLEDGE: K1.01 [2.5/2.7]
QID: P873

If a main steam line pressure gauge reads 900 psig, what is the absolute pressure?

A. 870 psia

B. 885 psia

C. 915 psia

D. 930 psia

ANSWER: C.

TOPIC: 193001
KNOWLEDGE: K1.01 [2.5/2.7]
QID: P1173

Which one of the following is equivalent to 5 psia?

A. 20 psig

B. 10 psig

C. 10 inches of mercury (Hg) vacuum

D. 20 inches of mercury (Hg) vacuum

ANSWER: D.

TOPIC: 193001
KNOWLEDGE: K1.01 [2.5/2.7]
QID: P1273

Which one of the following is arranged from the lowest pressure to the highest pressure?

A. 8 psia, 20 inches Hg absolute, 2 psig

B. 8 psia, 2 psig, 20 inches Hg absolute

C. 20 inches Hg absolute, 2 psig, 8 psia

D. 20 inches Hg absolute, 8 psia, 2 psig

ANSWER: A.

TOPIC: 193001
KNOWLEDGE: K1.01 [2.5/2.7]
QID: P1573

Which one of the following is arranged from the highest pressure to the lowest pressure?

A. 2 psig, 20 inches Hg absolute, 8 psia

B. 2 psig, 8 psia, 20 inches Hg absolute

C. 8 psia, 20 inches Hg absolute, 2 psig

D. 8 psia, 2 psig, 20 inches Hg absolute

ANSWER: A.

TOPIC: 193001
KNOWLEDGE: K1.01 [2.5/2.7]
QID: P1773

Which one of the following is approximately equivalent to 2 psig?

A. 11 psia

B. 13 psia

C. 15 psia

D. 17 psia

ANSWER: D.

TOPIC: 193001
KNOWLEDGE: K1.01 [2.5/2.7]
QID: P2073

Which one of the following is arranged from the lowest pressure to the highest pressure?

A. 2 psig, 12 inches Hg absolute, 8 psia

B. 2 psig, 18 inches Hg absolute, 8 psia

C. 12 psia, 20 inches Hg absolute, 2 psig

D. 12 psia, 30 inches Hg absolute, 2 psig

ANSWER: D.

TOPIC: 193001
KNOWLEDGE: K1.01 [2.5/2.7]
QID: P2173

Which one of the following is the approximate condenser vacuum when condenser pressure is 16 inches Hg absolute?

A. 4 inches Hg vacuum

B. 8 inches Hg vacuum

C. 12 inches Hg vacuum

D. 14 inches Hg vacuum

ANSWER: D.

TOPIC: 193001
KNOWLEDGE: K1.01 [2.5/2.7]
QID: P2273

Which one of the following is arranged from the highest pressure to the lowest pressure?

A. 2 psig, 12 inches Hg absolute, 8 psia

B. 2 psig, 18 inches Hg absolute, 8 psia

C. 12 psia, 20 inches Hg absolute, 2 psig

D. 12 psia, 30 inches Hg absolute, 2 psig

ANSWER: B.

TOPIC: 193001
KNOWLEDGE: K1.03 [2.6/2.6]
QID: P374 (B373)

Refer to the drawing of two water storage tanks with four differential pressure (D/P) level detectors (see figure below).

The tanks are identical and are being maintained at the same constant water level with 17 psia gas pressure above the water. The tanks are surrounded by standard atmospheric pressure. The temperature of the water in the tanks and reference legs is 70°F.

Which one of the level detectors is sensing the greatest D/P?

A. No. 1

B. No. 2

C. No. 3

D. No. 4

ANSWER: B.

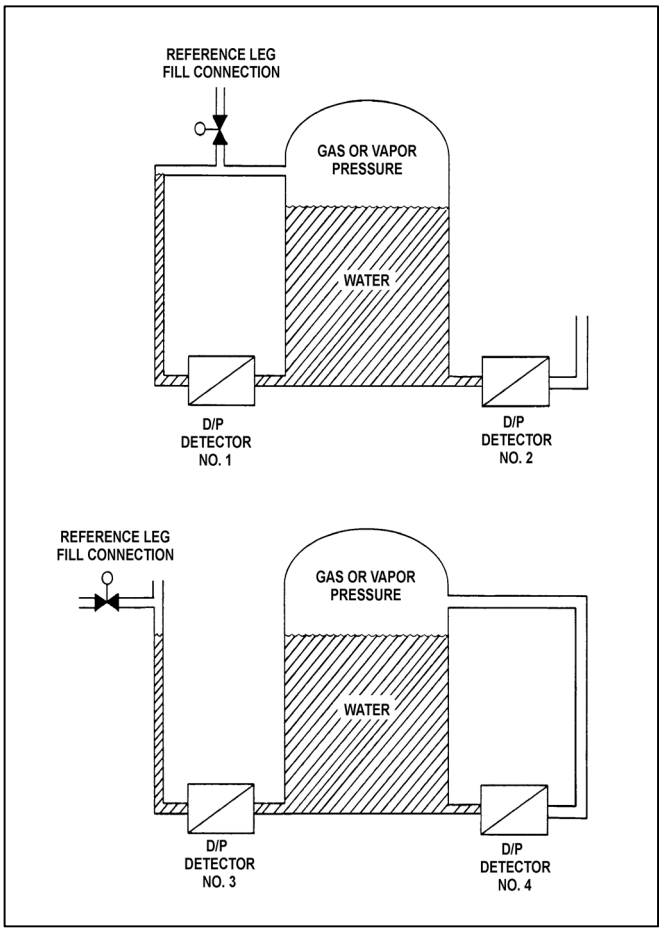

TOPIC: 193001
KNOWLEDGE: K1.03 [2.6/2.6]
QID: P573 (B1873)

An enclosed water storage tank is pressurized with nitrogen to prevent air inleakage. Tank pressure is allowed to vary as water level changes. A differential pressure detector is used to measure the tank level.

To achieve the most accurate level measurement, the low pressure side of the detector should sense which one of the following?

A. The pressure at the midline of the tank.

B. The pressure of the atmosphere surrounding the tank.

C. The pressure of a column of water external to the tank.

D. The pressure of the gas space at the top of the tank.

ANSWER: D.

TOPIC: 193001
KNOWLEDGE: K1.03 [2.6/2.6]
QID: P709 (B710)

Refer to the drawing of two water storage tanks with four differential pressure (D/P) level detectors (see figure below).

The tanks are identical and are being maintained at 17 psia and 70 percent water level (calibration conditions). They are located in a building that is currently at atmospheric pressure.

If the building ventilation system creates a vacuum in the building, which level detectors will provide the lowest level indications?

A. 1 and 3

B. 1 and 4

C. 2 and 3

D. 2 and 4

ANSWER: B.

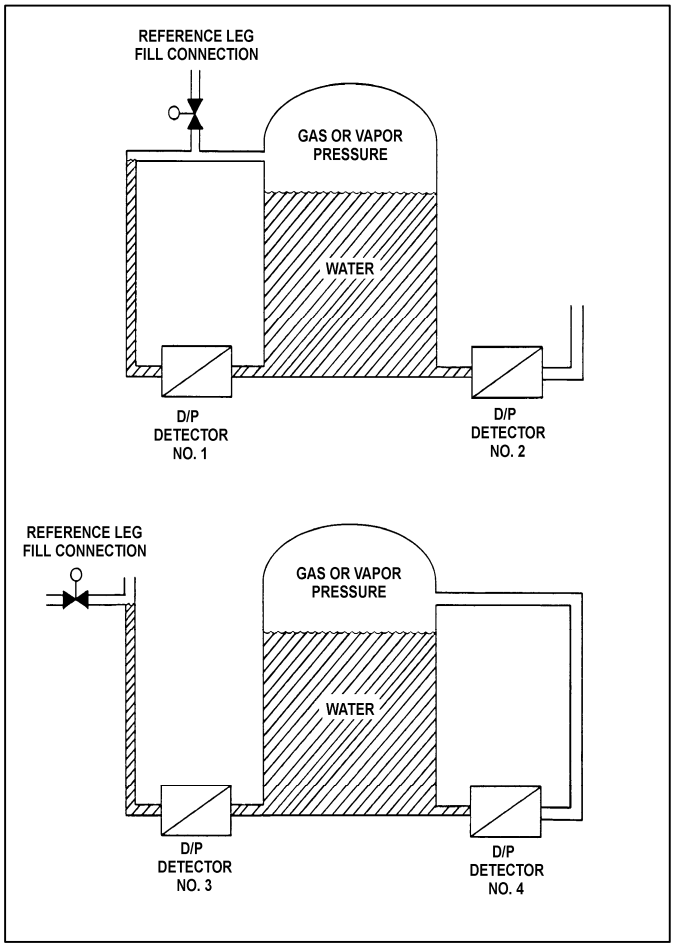

TOPIC: 193001
KNOWLEDGE: K1.03 [2.6/2.6]
QID: P1673 (B1174)

Refer to the drawing of two water storage tanks with four differential pressure (D/P) level detectors (see figure below).

The tanks are identical and are being maintained at 2 psig overpressure, the same constant water level, and a temperature of 60°F. They are surrounded by atmospheric pressure.

If a leak in the top of each tank causes a complete loss of overpressure, which detector(s) will produce a lower level indication?

A. No. 1 only

B. No. 2 only

C. No. 1 and 4

D. No. 2 and 3

ANSWER: D.

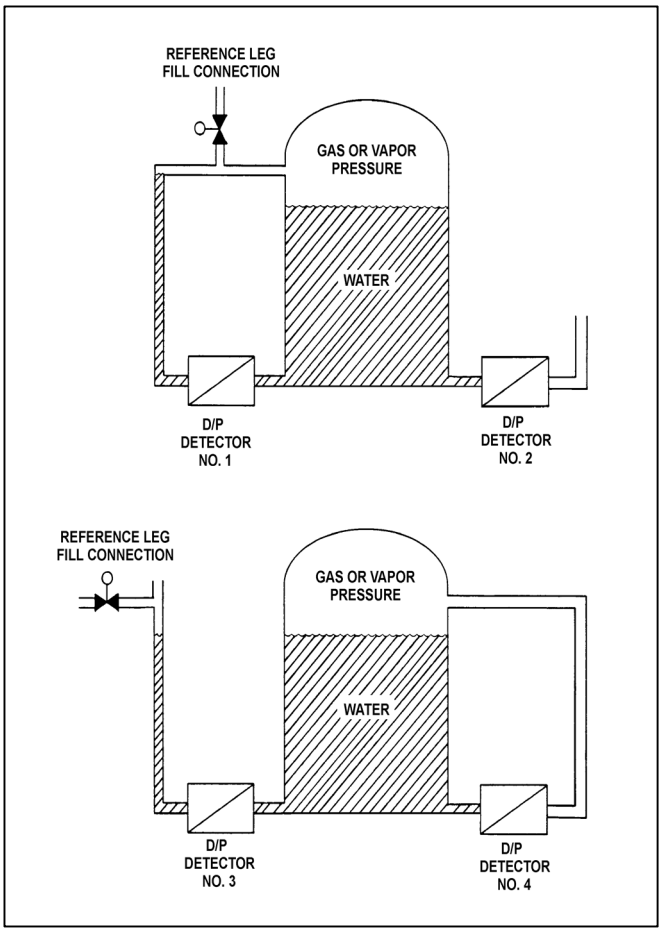

TOPIC: 193001
KNOWLEDGE: K1.03 [2.6/2.6]
QID: P2373 (B2373)

Refer to the drawing of two water storage tanks with four differential pressure (D/P) level detectors (see figure below).

The tanks are identical and are being maintained at 2 psig overpressure, 60°F, and the same constant water level. The tanks are located within a sealed containment structure that is being maintained at standard atmospheric pressure. All level detectors have been calibrated and are producing the same level indication.

If a ventilation malfunction causes the containment structure pressure to decrease to 13 psia, which detectors will produce the lowest level indications?

A. 1 and 3

B. 2 and 4

C. 1 and 4

D. 2 and 3

ANSWER: C.

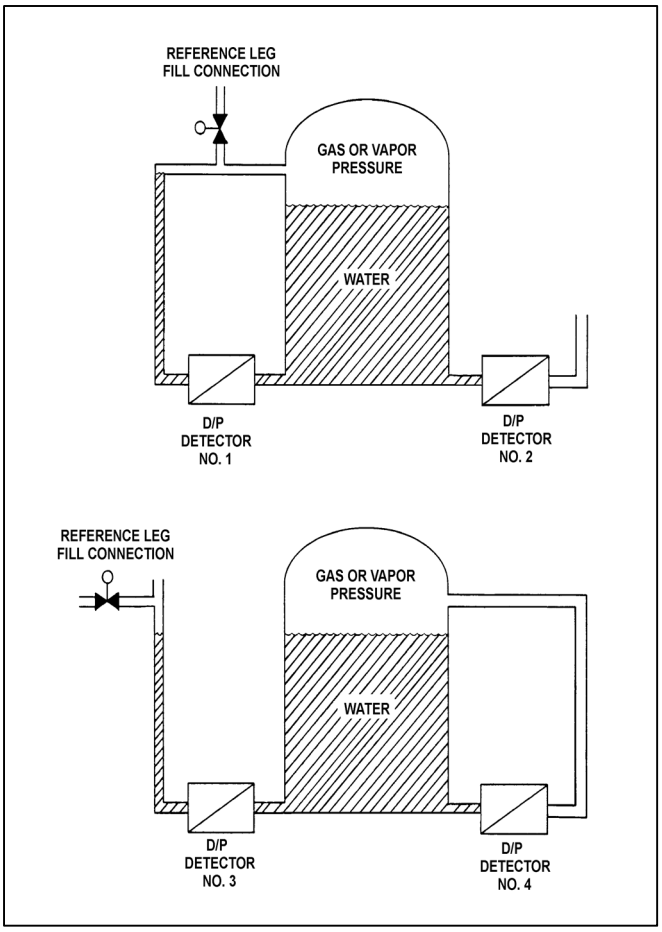

TOPIC: 193001
KNOWLEDGE: K1.03 [2.6/2.6]
QID: P2574 (B2573)

Refer to the drawing of two water storage tanks with four differential pressure (D/P) level detectors (see figure below).

The tanks are identical and are being maintained at 2 psig overpressure, 60°F, and the same constant water level. The tanks are located within a sealed containment structure that is being maintained at standard atmospheric pressure. All level detectors have been calibrated and are producing the same level indication.

If a ventilation malfunction causes the containment structure pressure to decrease to 13 psia, which detectors will produce the highest level indications?

A. 1 and 2

B. 3 and 4

C. 1 and 4

D. 2 and 3

ANSWER: D.

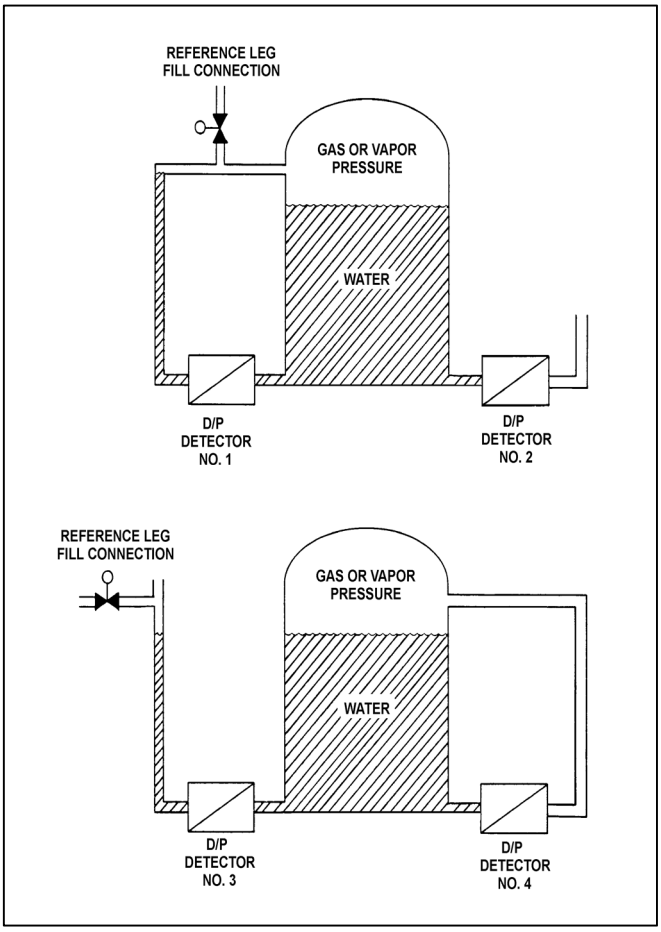

TOPIC: 193001
KNOWLEDGE: K1.03 [2.6/2.6]
QID: P2673 (B73)

Refer to the drawing of a water-filled manometer (see figure below).

The manometer is installed across an orifice in a ventilation duct to determine the direction of airflow. With the manometer conditions as shown, the pressure at P1 is _____ than P2; and the direction of airflow is _____.

A. greater; left to right

B. greater; right to left

C. less; left to right

D. less; right to left

ANSWER: A.

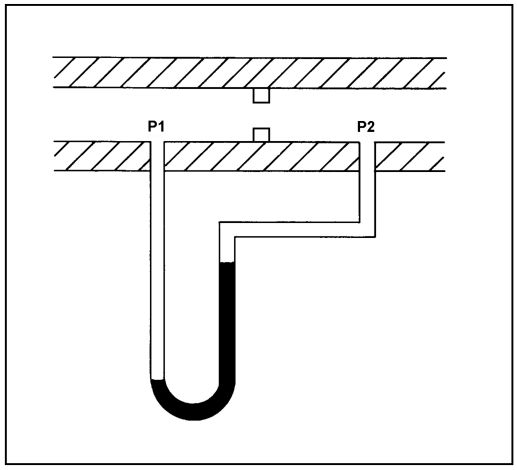

TOPIC: 193001
KNOWLEDGE: K1.03 [2.6/2.6]
QID: P2873 (B1073)

Refer to the drawing of two water storage tanks with four differential pressure (D/P) level detectors (see figure below).

The tanks are identical with equal water levels and 20 psia gas pressure above the water. The tanks are surrounded by standard atmospheric pressure. The temperature of the water in the tanks and reference legs is 70°F.

If each detector experiences a ruptured diaphragm, which detector(s) will produce a lower level indication? (Assume that actual tank and reference leg water levels do not change.)

A. No. 1 only

B. No. 2 only

C. No. 1, 2, and 3

D. No. 2, 3, and 4

ANSWER: D.

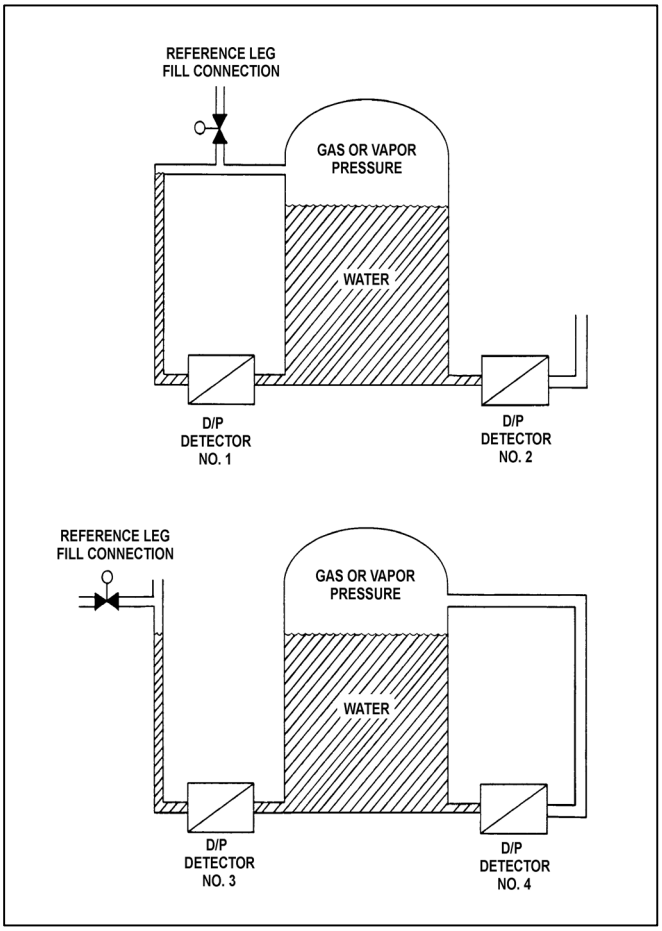

TOPIC: 193001
KNOWLEDGE: K1.03 [2.6/2.6]
QID: P2973 (B673)

Refer to the drawing of a water-filled manometer (see figure below).

The manometer is installed across an orifice in a ventilation duct to determine the direction of airflow. With the manometer conditions as shown, the pressure at P1 is _____ than P2; and the direction of airflow is _____.

A. less; right to left

B. less; left to right

C. greater; right to left

D. greater; left to right

ANSWER: A.

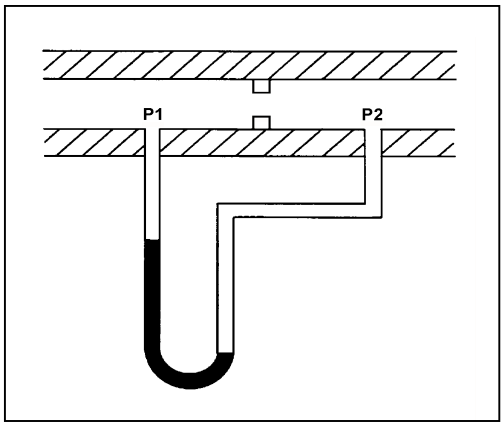

TOPIC: 193001
KNOWLEDGE: K1.03 [2.6/2.6]
QID: P3173 (B3173)

A water storage tank is vented to atmosphere. The tank is located at sea level and contains 100,000 gallons of 80°F water. A pressure gauge at the bottom of the tank reads 5.6 psig. What is the approximate water level in the tank?

A. 13 feet

B. 17 feet

C. 21 feet

D. 25 feet

ANSWER: A.

TOPIC: 193001
KNOWLEDGE: K1.03 [2.6/2.6]
QID: P3673 (B3673)

Refer to the drawing of a tank with a differential pressure (D/P) level detector (see figure below).

If the tank contains 30 feet of water at 60°F, what is the approximate D/P sensed by the detector?

A. 7 psid

B. 13 psid

C. 20 psid

D. 28 psid

ANSWER: B.

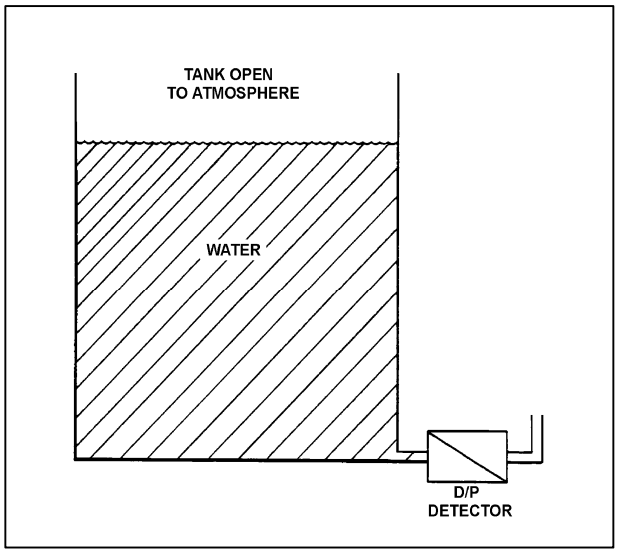

TOPIC: 193001
KNOWLEDGE: K1.03 [2.6/2.6]
QID: P3873 (B3873)

A water storage tank is vented to atmosphere. The tank is located at sea level and contains 100,000 gallons of water at 80°F. A pressure gauge at the bottom of the tank reads 7.3 psig. What is the approximate water level in the tank?

A. 13 feet

B. 17 feet

C. 21 feet

D. 25 feet

ANSWER: B.

TOPIC: 193001
KNOWLEDGE: K1.03 [2.6/2.6]
QID: P4537 (B4537)

A water storage tank is vented to atmosphere. The tank is located at sea level and contains 100,000 gallons of water at 80°F. A pressure gauge at the bottom of the tank reads 9.0 psig. What is the approximate water level in the tank?

A. 13 feet

B. 17 feet

C. 21 feet

D. 25 feet

ANSWER: C.

TOPIC: 193001
KNOWLEDGE: K1.03 [2.6/2.6]
QID: P4837 (B4837)

Refer to the drawing of two water storage tanks with four differential pressure (D/P) level detectors (see figure below).

The tanks are identical and are being maintained at 2 psig overpressure, the same constant water level, and a temperature of 60°F. The tanks are surrounded by atmospheric pressure. All level detectors have been calibrated and are producing the same level indication.

If a leak in the top of each tank causes a complete loss of overpressure in both tanks, which detector(s) will produce the highest level indication(s)?

A. No. 1 only

B. No. 2 only

C. No. 1 and 4

D. No. 2 and 3

ANSWER: C.

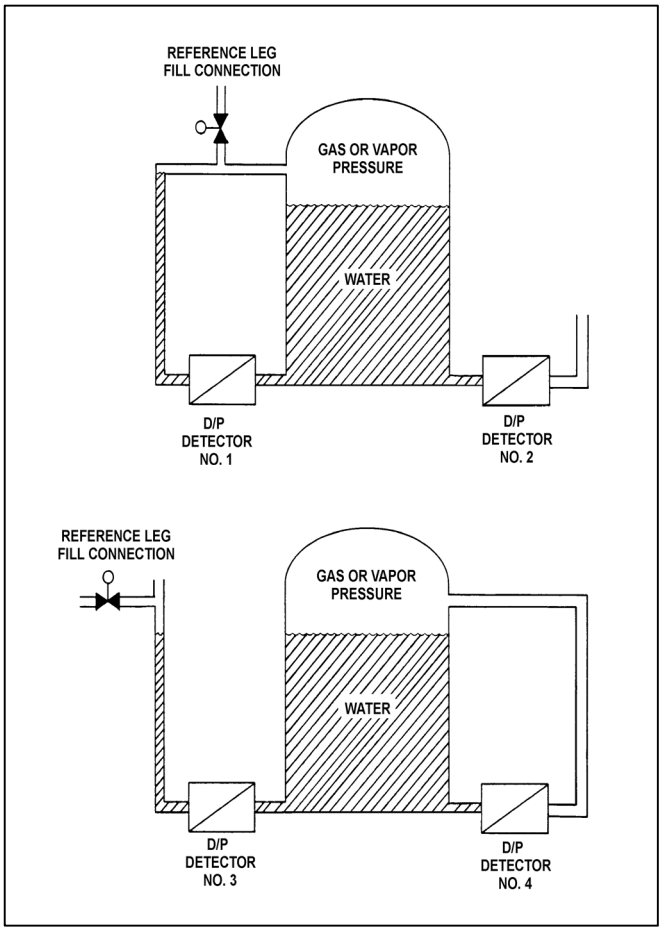

TOPIC: 193001
KNOWLEDGE: K1.03 [2.6/2.6]
QID: P5837 (B5837)

Refer to the drawing of an open water storage tank with a differential pressure (D/P) level indicator that is vented to atmosphere (see figure below). Both the tank and the level indicator are surrounded by standard atmospheric pressure. Tank water temperature is 70°F.

The D/P level indicator is sensing a differential pressure of 4.0 psi. What is the water level in the tank above the instrument penetration?

A. 9.2 feet

B. 16.7 feet

C. 24.7 feet

D. 43.2 feet

ANSWER: A.

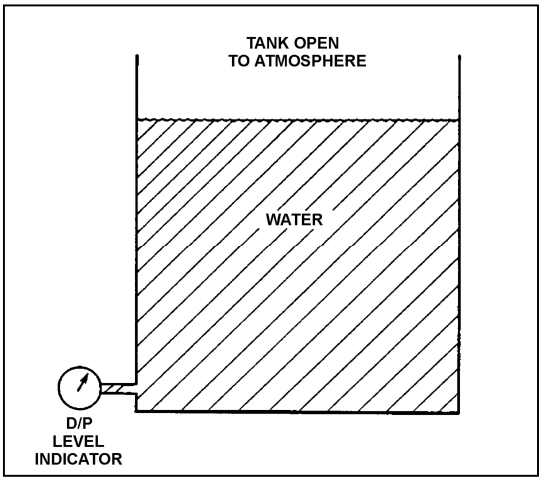

There are no test items available for topic 193002.

TOPIC: 193003
KNOWLEDGE: K1.02 [2.4/2.5]
QID: P1774

Two identical pressurizers are connected to the same location on two identical reactor coolant systems operating at 1,000 psia. Pressurizer A volume contains 50 percent saturated water and 50 percent saturated steam. Pressurizer B volume contains 50 percent subcooled water (at 300°F) and 50 percent nitrogen.

Which pressurizer will maintain the higher pressure following a sudden 10 percent liquid outsurge from each pressurizer, and why?

A. Pressurizer A due to vaporizing of saturated water as pressure begins to decrease.

B. Pressurizer A due to the expansion characteristics of saturated steam being better than the expansion characteristics of nitrogen.

C. Pressurizer B due to the subcooled water removing a relatively small amount of energy during the outsurge.

D. Pressurizer B due to the expansion characteristics of nitrogen being better than the expansion characteristics of saturated steam.

ANSWER: A.

TOPIC: 193003
KNOWLEDGE: K1.02 [2.4/2.5]
QID: P1973

Two identical pressurizers are connected to the same location on two identical reactor coolant systems operating at 1,000 psia. Pressurizer A volume contains 50 percent subcooled water (at 300°F) and 50 percent nitrogen. Pressurizer B volume contains 50 percent saturated water and 50 percent saturated steam.

Which pressurizer will maintain the higher pressure during a sudden 10 percent liquid outsurge from each pressurizer, and why?

A. Pressurizer A due to the subcooled water removing a relatively small amount of energy during the outsurge.

B. Pressurizer A due to the expansion characteristics of nitrogen being better than the expansion characteristics of saturated steam.

C. Pressurizer B due to vaporizing of saturated water as pressure begins to decrease.

D. Pressurizer B due to the expansion characteristics of saturated steam being better than the expansion characteristics of nitrogen.

ANSWER: C.

TOPIC: 193003
KNOWLEDGE: K1.02 [2.4/2.5]
QID: P3874

A reactor is operating normally at 100 percent power. Reactor coolant enters the reactor vessel at a temperature of 556°F and a total flow rate of 320,000 gpm. The reactor coolant leaves the reactor vessel at 612°F.

What is the approximate flow rate of the reactor coolant leaving the reactor vessel?

A. 320,000 gpm

B. 330,000 to 339,000 gpm

C. 340,000 to 349,000 gpm

D. 350,000 to 359,000 gpm

ANSWER: D.

TOPIC: 193003
KNOWLEDGE: K1.08 [2.8/2.8]
QID: P674 (B1074)

A liquid is saturated with 0 percent quality. Assuming pressure remains constant, the addition of a small amount of heat will...

A. raise the steady-state liquid temperature above the boiling point.

B. result in a subcooled liquid.

C. result in some of the liquid vaporizing.

D. result in a superheated liquid.

ANSWER: C.

TOPIC: 193003
KNOWLEDGE: K1.08 [2.8/2.8]
QID: P774

A pressurizer is operating in a saturated condition at 636°F. If a sudden 10 percent liquid outsurge occurs, pressurizer pressure will _____; and pressurizer temperature will _____.

A. remain the same; decrease

B. remain the same; remain the same

C. decrease; decrease

D. decrease; remain the same

ANSWER: C.

TOPIC: 193003
KNOWLEDGE: K1.08 [2.8/2.8]
QID: P874 (B875)

Consider a steam-water mixture with a quality of 99 percent. If pressure remains constant and heat is removed from the mixture, the temperature of the mixture will _____; and the quality of the mixture will _____. (Assume the mixture remains saturated.)

A. decrease; increase

B. decrease; decrease

C. remain the same; increase

D. remain the same; decrease

ANSWER: D.

TOPIC: 193003
KNOWLEDGE: K1.08 [2.8/2.8]
QID: P1075

A nuclear power plant is shut down with the pressurizer in a saturated condition as follows:

Pressurizer liquid temperature = 588°F
Pressurizer vapor temperature = 588°F
Pressurizer pressure = 1,410 psia

If the pressurizer is vented until pressure equals 1,200 psia, pressurizer liquid temperature will...

A. increase due to condensation of vapor.

B. increase due to evaporation of liquid.

C. decrease due to condensation of vapor.

D. decrease due to evaporation of liquid.

ANSWER: D.

TOPIC: 193003
KNOWLEDGE: K1.08 [2.8/2.8]
QID: P1174

Which one of the following describes the temperature of a saturated liquid?

A. Below the boiling point.

B. At the boiling point.

C. Above the boiling point.

D. Unrelated to the boiling point.

ANSWER: B.

TOPIC: 193003
KNOWLEDGE: K1.08 [2.8/2.8]
QID: P1374 (B1874)

A steam-water mixture is initially saturated with a quality of 95 percent when a small amount of heat is added to the mixture. If the mixture remains saturated and pressure remains constant, the temperature of the mixture will _____; and the quality of the mixture will _____.

A. increase; remain the same

B. increase; increase

C. remain the same; remain the same

D. remain the same; increase

ANSWER: D.

TOPIC: 193003
KNOWLEDGE: K1.08 [2.8/2.8]
QID: P1474 (B1974)

An open container holds 1.0 lbm of saturated water at standard atmospheric pressure. The addition of 1.0 Btu will…

A. raise the temperature of the water by 1°F.

B. vaporize a portion of the water.

C. increase the density of the water.

D. result in 1°F of superheat.

ANSWER: B.

TOPIC: 193003
KNOWLEDGE: K1.08 [2.8/2.8]
QID: P1574 (B1574)

Consider a steam-water mixture with a quality of 79 percent. If pressure remains constant and heat is added to the mixture, the temperature of the mixture will _____; and the quality of the mixture will _____. (Assume the mixture remains saturated.)

A. increase; increase

B. increase; remain the same

C. remain the same; increase

D. remain the same; remain the same

ANSWER: C.

TOPIC: 193003
KNOWLEDGE: K1.08 [2.8/2.8]
QID: P1575

A nuclear power plant is shut down with the pressurizer in a saturated condition as follows:

Pressurizer liquid temperature = 588°F
Pressurizer vapor temperature = 588°F
Pressurizer pressure = 1,410 psia

Pressurizer spray is initiated to lower pressurizer pressure to 1,350 psia. When pressurizer pressure stabilizes at 1,350 psia, liquid temperature will be _____; and vapor temperature will be _____.

A. the same; the same

B. the same; lower

C. lower; the same

D. lower; lower

ANSWER: D.

TOPIC: 193003
KNOWLEDGE: K1.08 [2.8/2.8]
QID: P1974 (B3574)

A steam-water mixture is initially saturated with a quality of 50 percent when a small amount of heat is added. If pressure remains constant and the mixture remains saturated, mixture steam quality will _____; and mixture temperature will _____.

A. increase; increase

B. increase; remain the same

C. remain the same; increase

D. remain the same; remain the same

ANSWER: B.

TOPIC: 193003
KNOWLEDGE: K1.08 [2.8/2.8]
QID: P1976 (B2874)

Which one of the following is the approximate quality of a steam-water mixture at 467°F with an enthalpy of 1,000 Btu/lbm?

A. 24 percent

B. 27 percent

C. 73 percent

D. 76 percent

ANSWER: C.

TOPIC: 193003
KNOWLEDGE: K1.08 [2.8/2.8]
QID: P2174

Consider a pressurizer containing a saturated steam-water mixture at 636°F with a quality of 15 percent. If an outsurge removes 10 percent of the liquid volume from the pressurizer, the temperature of the remaining mixture will _____, and the quality of the remaining mixture will _____. (Assume the mixture remains saturated.)

A. decrease; decrease

B. decrease; increase

C. remain the same; decrease

D. remain the same; increase

ANSWER: B.

TOPIC: 193003
KNOWLEDGE: K1.08 [2.8/2.8]
QID: P2374 (B2375)

Which one of the following describes the effect of removing heat from a saturated steam-water mixture that remains in a saturated condition?

A. Temperature will increase.

B. Temperature will decrease.

C. Quality will increase.

D. Quality will decrease.

ANSWER: D.

TOPIC: 193003
KNOWLEDGE: K1.08 [2.8/2.8]
QID: P2474

A nuclear power plant is shut down with the pressurizer in a saturated condition as follows:

Pressurizer liquid temperature = 588°F
Pressurizer vapor temperature = 588°F
Pressurizer pressure = 1,410 psia

Pressurizer heaters are energized to raise pressurizer pressure to 1,450 psia. When pressurizer pressure stabilizes at 1,450 psia, liquid temperature will be _____ and vapor temperature will be _____.

A. the same; the same

B. the same; higher

C. higher; the same

D. higher; higher

ANSWER: D.

TOPIC: 193003
KNOWLEDGE: K1.08 [2.8/2.8]
QID: P2874 (B3374)

An open container holds 1.0 lbm of saturated water at standard atmospheric pressure. The addition of 4.0 Btu will...

A. result in 4°F of superheat.

B. vaporize a portion of the water.

C. increase the density of the water.

D. raise the temperature of the water by 4°F.

ANSWER: B.

TOPIC: 193003
KNOWLEDGE: K1.08 [2.8/2.8]
QID: P2974 (B2975)

Consider a sealed vessel containing 1,000 lbm of a saturated steam-water mixture at 500°F. The vessel is perfectly insulated with no heat gain or loss occurring.

If a leak near the bottom of the vessel results in a loss of 10 percent of the liquid volume from the vessel, the temperature of the mixture will _____; and the overall quality of the mixture will _____. (Assume the mixture remains saturated.)

A. decrease; increase

B. decrease; decrease

C. remain the same; increase

D. remain the same; decrease

ANSWER: A.

TOPIC: 193003
KNOWLEDGE: K1.12 [2.8/2.3]
QID: P3375 (B3378)

Given the following:

- A saturated steam-water mixture with an inlet quality of 60 percent is flowing through a moisture separator.
- The moisture separator is 100 percent efficient for removing moisture.

How much moisture will be removed by the moisture separator from 50 lbm of the steam-water mixture?

A. 10 lbm

B. 20 lbm

C. 30 lbm

D. 40 lbm

ANSWER: B.

TOPIC: 193003
KNOWLEDGE: K1.12 [2.8/2.3]
QID: P3774 (B3778)

Given the following:

- A saturated steam-water mixture with an inlet quality of 40 percent is flowing through a moisture separator.
- The moisture separator is 100 percent efficient for removing water.

How much water will be removed by the moisture separator from 50 lbm of the steam-water mixture?

A. 10 lbm

B. 20 lbm

C. 30 lbm

D. 40 lbm

ANSWER: C.

TOPIC: 193003
KNOWLEDGE: K1.14 [2.4/2.5]
QID: P574

Any vapor having a temperature above saturation temperature is a...

A. saturated vapor.

B. superheated vapor.

C. dry saturated vapor.

D. wet saturated vapor.

ANSWER: B.

TOPIC: 193003
KNOWLEDGE: K1.14 [2.4/2.5]
QID: P1674

A reactor trip occurred 10 minutes ago due to a loss of coolant accident. Emergency coolant injection is in progress and pressurizer level is increasing. Current pressurizer conditions are as follows:

Pressurizer liquid temperature	=	568°F
Pressurizer vapor temperature	=	596°F
Pressurizer pressure	=	1,410 psia
Pressurizer level	=	60 percent

Given these conditions, the pressurizer liquid is _____; and the pressurizer vapor is _____.

A. saturated; saturated

B. saturated; superheated

C. subcooled; saturated

D. subcooled; superheated

ANSWER: D.

TOPIC: 193003
KNOWLEDGE: K1.14 [2.4/2.5]
QID: P2074 (B2074)

Consider a saturated steam-water mixture at 500°F with a quality of 90 percent. If the pressure of the mixture is decreased with no heat gain or loss, the temperature of the mixture will _____; and the quality of the mixture will _____. (Assume the mixture remains saturated.)

A. decrease; decrease

B. decrease; increase

C. remain the same; decrease

D. remain the same; increase

ANSWER: B.

TOPIC: 193003
KNOWLEDGE: K1.14 [2.4/2.5]
QID: P7709 (B7709)

Consider 1.0 lbm of dry saturated steam at 200 psia. If pressure does <u>not</u> change, which one of the following will be caused by the addition of 6.0 Btu to the steam?

A. The steam will remain saturated at the same temperature.

B. The steam will become superheated at the same temperature.

C. The steam will remain saturated at a higher temperature.

D. The steam will become superheated at a higher temperature.

ANSWER: D.

TOPIC: 193003
KNOWLEDGE: K1.16 [2.6/2.7]
QID: P2975 (B2973)

An open vessel contains 1.0 lbm of water at 206°F and standard atmospheric pressure. Which one of the following will be caused by the addition of 3.0 Btu to the water?

A. The water temperature will rise by approximately 3°F.

B. Approximately 3 percent of the water mass will vaporize.

C. The water density will decrease by approximately 3 percent.

D. The water will become superheated by approximately 3°F.

ANSWER: A.

TOPIC: 193003
KNOWLEDGE: K1.17 [3.0/3.2]
QID: P575

A reactor is shut down with reactor coolant system (RCS) pressure at 1,500 psia and core decay heat is being removed via the steam generators (SGs). What pressure must be maintained in the SGs to obtain a 110°F subcooling margin in the reactor coolant leaving the SGs? (Assume the reactor coolant leaves the SGs at the SG saturation temperature.)

A. 580 psia

B. 600 psia

C. 620 psia

D. 640 psia

ANSWER: B.

TOPIC: 193003
KNOWLEDGE: K1.17 [3.0/3.2]
QID: P675

A reactor is shut down with reactor coolant system (RCS) pressure at 1,000 psia and core decay heat is being removed via the steam generators (SGs). What pressure must be maintained in the SGs to obtain a 50°F subcooling margin in the reactor coolant leaving the SGs? (Assume the reactor coolant leaves the SGs at the SG saturation temperature.)

A. 550 psia

B. 600 psia

C. 650 psia

D. 700 psia

ANSWER: C.

TOPIC: 193003
KNOWLEDGE: K1.17 [3.0/3.2]
QID: P775

Which one of the following will increase the subcooling of the condensate in the main condenser hotwell?

A. Isolate circulating water to one shell of the main condenser.

B. Increase circulating water inlet temperature.

C. Decrease circulating water flow rate.

D. Decrease main turbine steam flow rate.

ANSWER: D.

TOPIC: 193003
KNOWLEDGE: K1.24 [2.8/3.1]
QID: P1675 (B1175)

Which one of the following is the approximate temperature of a saturated steam-water mixture that has an enthalpy of 1,150 Btu/lbm and a quality of 95 percent?

A. 220°F

B. 270°F

C. 360°F

D. 440°F

ANSWER: C.

TOPIC: 193003
KNOWLEDGE: K1.24 [2.8/3.1]
QID: P6039 (B6038)

Given a set of steam tables that lists the following parameters for saturated steam and water:

- Pressure
- Enthalpy
- Specific volume
- Entropy
- Temperature

One can determine the _____ of a saturated steam-water mixture given only the _____.

A. temperature; enthalpy

B. temperature; pressure

C. pressure; entropy

D. pressure; specific volume

ANSWER: B.

TOPIC: 193003
KNOWLEDGE: K1.24 [2.8/3.1]
QID: P6939 (B6938)

A nuclear power plant experienced a loss of all AC electrical power due to a natural disaster. A few days later, there is turbulent boiling in the spent fuel pool. Average spent fuel temperature is elevated but stable. Assume that boiling is the only means of heat removal from the spent fuel pool.

Given the following stable current conditions:

Spent fuel decay heat rate = 4.8 MW
Spent fuel building pressure = 14.7 psia
Spent fuel pool temperature = 212°F

At what approximate rate is the mass of water in the spent fuel pool decreasing?

A. 4,170 lbm/hr

B. 4,950 lbm/hr

C. 14,230 lbm/hr

D. 16,870 lbm/hr

ANSWER: D.

TOPIC: 193003
KNOWLEDGE: K1.24 [2.8/3.1]
QID: P7039 (B7038)

Given the following initial conditions for a spent fuel pool:

Spent fuel decay heat rate	=	5.0 MW
Spent fuel pool water temperature	=	90°F
Spent fuel pool water mass	=	2.5×10^6 lbm
Spent fuel pool water specific heat	=	1.0 Btu/lbm-°F

If a complete loss of spent fuel pool cooling occurs, how long will it take for spent fuel pool water temperature to reach 212°F? (Assume that the spent fuel pool remains in thermal equilibrium, and that there is no heat removal from the spent fuel pool.)

A. 18 hours

B. 31 hours

C. 48 hours

D. 61 hours

ANSWER: A.

TOPIC: 193003
KNOWLEDGE: K1.25 [3.3/3.4]
QID: P75

Which one of the following is the approximate reactor coolant system subcooling margin when reactor coolant temperature is 280°F and pressurizer pressure is 400 psig?

A. 165°F

B. 168°F

C. 265°F

D. 268°F

ANSWER: B.

TOPIC: 193003
KNOWLEDGE: K1.25 [3.3/3.4]
QID: P141

Given the following reactor coolant system (RCS) parameters, what is the RCS subcooling margin.

RCS pressure = 2,235 psig
RCS hot leg temperature = 610°F

A. 25°F

B. 31°F

C. 38°F

D. 43°F

ANSWER: D.

TOPIC: 193003
KNOWLEDGE: K1.25 [3.3/3.4]
QID: P275 (B275)

The saturation pressure for water at 328°F is approximately...

A. 85 psig.

B. 100 psig.

C. 115 psig.

D. 130 psig.

ANSWER: A.

TOPIC: 193003
KNOWLEDGE: K1.25 [3.3/3.4]
QID: P376

What is the approximate enthalpy of a saturated steam-water mixture at 130°F with a quality of 90 percent?

A. 1,015 Btu/lbm

B. 1,093 Btu/lbm

C. 1,118 Btu/lbm

D. 1,216 Btu/lbm

ANSWER: A.

TOPIC: 193003
KNOWLEDGE: K1.25 [3.3/3.4]
QID: P385

The following steady-state 100 percent power conditions existed just prior to a plant shutdown for maintenance:

RCS T_{ave} = 573.5°F
SG T_{stm} = 513.5°F

During the shutdown, 5 percent of the total steam generator (SG) tubes were plugged. Upon completion of the maintenance, the plant was returned to 100 percent power with RCS mass flow rate and RCS temperatures unchanged.

Which one of the following is the approximate current SG steam pressure with the plant at 100 percent power?

A. 711 psia

B. 734 psia

C. 747 psia

D. 762 psia

ANSWER: C.

TOPIC: 193003
KNOWLEDGE: K1.25 [3.3/3.4]
QID: P474

Main condenser hotwell condensate is 4°F subcooled at a temperature of 112°F. What is the main condenser pressure?

A. 1.78 psia

B. 1.51 psia

C. 1.35 psia

D. 1.20 psia

ANSWER: B.

TOPIC: 193003
KNOWLEDGE: K1.25 [3.3/3.4]
QID: P1275

For steam at 230 psia and 900°F, what is the approximate amount of superheat?

A. 368°F

B. 393°F

C. 506°F

D. 535°F

ANSWER: C.

TOPIC: 193003
KNOWLEDGE: K1.25 [3.3/3.4]
QID: P1775 (B1776)

What is the approximate amount of heat required to convert 3.0 lbm of water at 100°F and 100 psia to dry saturated steam at 100 psia?

A. 889 Btu

B. 1,119 Btu

C. 2,666 Btu

D. 3,358 Btu

ANSWER: D.

TOPIC: 193003
KNOWLEDGE: K1.25 [3.3/3.4]
QID: P1875

Dry saturated steam undergoes an ideal expansion process in an ideal turbine from 1,000 psia to 28 inches Hg vacuum. Approximately how much specific work is being performed by the turbine?

A. 1,193 Btu/lbm

B. 805 Btu/lbm

C. 418 Btu/lbm

D. 388 Btu/lbm

ANSWER: C.

TOPIC: 193003
KNOWLEDGE: K1.25 [3.3/3.4]
QID: P2275 (B2275)

A saturated steam-water mixture with a quality of 30 percent leaves a main turbine at 1.0 x 10^6 lbm/hr and enters a steam condenser at 2.0 psia. Condensate enters the hotwell at 118°F.

Which one of the following is the approximate condenser heat transfer rate?

A. 3.1 x 10^8 Btu/hr

B. 5.8 x 10^8 Btu/hr

C. 7.2 x 10^8 Btu/hr

D. 9.9 x 10^8 Btu/hr

ANSWER: A.

TOPIC: 193003
KNOWLEDGE: K1.25 [3.3/3.4]
QID: P2375 (B2374)

Which one of the following is the approximate amount of heat required to convert 2.0 lbm of water at 100°F and 100 psia to dry saturated steam at 100 psia?

A. 1,119 Btu

B. 1,187 Btu

C. 2,238 Btu

D. 2,374 Btu

ANSWER: C.

TOPIC: 193003
KNOWLEDGE: K1.25 [3.3/3.4]
QID: P2475 (B2475)

A steam line is carrying steam at 500 psia and 507°F. Approximately how much specific ambient heat loss is required before moisture formation can occur in the steam line?

A. 31 Btu/lbm

B. 45 Btu/lbm

C. 58 Btu/lbm

D. 71 Btu/lbm

ANSWER: A

TOPIC: 193003
KNOWLEDGE: K1.25 [3.3/3.4]
QID: P2575 (B2575)

Which one of the following is the approximate amount of heat required to convert 2.0 lbm of water at 100°F and 100 psia to superheated steam at 400°F and 100 psia?

A. 1,119 Btu

B. 1,159 Btu

C. 2,239 Btu

D. 2,319 Btu

ANSWER: D.

TOPIC: 193003
KNOWLEDGE: K1.25 [3.3/3.4]
QID: P2675 (B2675)

What is the approximate specific heat (Btu/lbm-°F) of water at 300°F and 100 psia?

A. 1.03 Btu/lbm-°F

B. 1.11 Btu/lbm-°F

C. 1.17 Btu/lbm-°F

D. 1.25 Btu/lbm-°F

ANSWER: A.

TOPIC: 193003
KNOWLEDGE: K1.25 [3.3/3.4]
QID: P2775 (B2776)

With a nuclear power plant operating near rated power, air inleakage into the main condenser causes main condenser pressure to increase from 1.0 psia to 2.0 psia.

Given the following:

- Initial main condenser condensate depression was 4°F.
- After the plant stabilizes, main condenser condensate depression is 2°F with main condenser pressure at 2.0 psia.

Which one of the following is the approximate increase in main condenser specific heat rejection needed to restore condensate depression to 4°F?

A. 2 Btu/lbm

B. 4 Btu/lbm

C. 8 Btu/lbm

D. 16 Btu/lbm

ANSWER: A.

TOPIC: 193003
KNOWLEDGE: K1.25 [3.3/3.4]
QID: P2875

Given the following:

- A nuclear power plant is operating near rated power.
- The main turbine is comprised of a single unit with no reheat.
- Main turbine inlet steam conditions are 900 psia and 100 percent quality.
- Ideal steam expansion is occurring in the main turbine.
- Main condenser pressure is 1.0 psia.

Which one of the following is the approximate main condenser specific heat rejection needed to establish condensate depression at 4°F?

A. 716 Btu/lbm

B. 782 Btu/lbm

C. 856 Btu/lbm

D. 1,132 Btu/lbm

ANSWER: A.

TOPIC: 193003
KNOWLEDGE: K1.25 [3.3/3.4]
QID: P3074 (B3075)

The temperature of a saturated steam-water mixture is 467°F.

Which one of the following parameter values, when paired with the temperature, provides insufficient information to determine the quality of the mixture?

A. Pressure is 499.96 psia

B. Enthalpy is 977.33 Btu/lbm

C. Entropy is 1.17 Btu/lbm -°R

D. Specific volume is 0.817 ft^3/lbm

ANSWER: A.

TOPIC: 193003
KNOWLEDGE: K1.25 [3.3/3.4]
QID: P3175 (B3175)

A steam line is carrying dry saturated steam at 500 psia. Approximately how much heat addition to the steam is necessary to achieve 60°F of superheat?

A. 31 Btu/lbm

B. 45 Btu/lbm

C. 58 Btu/lbm

D. 71 Btu/lbm

ANSWER: B.

TOPIC: 193003
KNOWLEDGE: K1.25 [3.3/3.4]
QID: P3275 (B3274)

An ideal main turbine generator (MTG) is producing 1,000 MW of electrical power while being supplied with 100 percent quality steam at 920 psig. Steam supply pressure is then gradually increased to 980 psig at the same quality. Assume turbine control valve position and condenser vacuum remain the same.

Which one of the following describes why the MTG output increases as steam pressure increases?

A. Each lbm of steam entering the turbine has a higher specific heat.

B. Each lbm of steam entering the turbine has a higher specific enthalpy.

C. Each lbm of steam passing through the turbine expands to fill a greater volume.

D. Each lbm of steam passing through the turbine performs increased work in the turbine.

ANSWER: D.

TOPIC: 193003
KNOWLEDGE: K1.25 [3.3/3.4]
QID: P3475 (B3475)

Which one of the following is the approximate amount of heat required to convert 2.0 lbm of water at 100°F and 100 psia to dry saturated steam at 100 psia?

A. 560 Btu

B. 1,120 Btu

C. 2,238 Btu

D. 3,356 Btu

ANSWER: C.

TOPIC: 193003
KNOWLEDGE: K1.25 [3.3/3.4]
QID: P3575

The following steady-state 100 percent power conditions existed just prior to a plant shutdown for maintenance:

RCS T_{ave} = 572°F
SG T_{stm} = 534°F

During the shutdown, 5 percent of the total steam generator (SG) tubes were plugged. Which one of the following will be the approximate SG steam pressure when the plant is returned to 100 percent power? (Assume RCS mass flow rate and RCS T_{ave} are the same as their pre-shutdown 100 percent power values.)

A. 813 psia

B. 841 psia

C. 870 psia

D. 900 psia

ANSWER: D.

TOPIC: 193003
KNOWLEDGE: K1.25 [3.3/3.4]
QID: P3775 (B3774)

A 100 ft^3 vessel contains a saturated steam-water mixture at 1,000 psia. The water portion occupies 30 ft^3 and the steam portion occupies the remaining 70 ft^3. What is the approximate total mass of the mixture in the vessel?

A. 1,547 lbm

B. 2,612 lbm

C. 3,310 lbm

D. 4,245 lbm

ANSWER: A.

TOPIC: 193003
KNOWLEDGE: K1.25 [3.3/3.4]
QID: P3875

A nuclear power plant has been operating at full power for six months when a sustained station blackout occurs, resulting in a reactor trip and a complete loss of forced reactor coolant circulation. All means of reactor coolant injection and steam generator heat removal are unavailable. Reactor coolant system (RCS) pressure is being maintained at approximately 2,100 psia by operation of the pressurizer relief valves.

The following conditions exist five minutes after the reactor trip:

RCS pressure	=	2,100 psia
Core exit thermocouple (CET) temperature	=	550°F

With RCS pressure constant at 2,100 psia, which one of the following describes the future response of the CET temperature indication?

A. CET indication will remain stable at approximately 550°F until the core becomes uncovered; then, CET indication will become erratic.

B. CET indication will remain stable at approximately 550°F until the core becomes uncovered; then, CET indication will increase to approximately 643°F where it will become erratic.

C. CET indication will steadily increase to approximately 643°F and stabilize; then, as the core begins to uncover, CET indication will increase further until it becomes erratic.

D. CET indication will steadily increase until it becomes erratic.

ANSWER: C.

TOPIC: 193003
KNOWLEDGE: K1.25 [3.3/3.4]
QID: P3939 (B3938)

Main steam is being used to reheat high pressure (HP) turbine exhaust in a moisture separator-reheater (MSR).

Given:

- The HP turbine exhaust enters the MSR reheater section as dry saturated steam.
- The exhaust enters and exits the reheater section at 280 psia and a flow rate of 1.0E6 lbm/hr.
- The main steam heat transfer rate in the reheater section is 42.1E6 Btu/hr.

Which one of the following is the approximate temperature of the HP turbine exhaust leaving the reheater section of the MSR?

A. 450°F

B. 475°F

C. 500°F

D. 525°F

ANSWER: B.

TOPIC: 193003
KNOWLEDGE: K1.25 [3.3/3.4]
QID: P4139 (B4138)

A saturated steam-water mixture at 50 percent quality is leaving a main turbine at 1.0×10^6 lbm/hr and entering a condenser at 1.6 psia. Condensate enters the hotwell at 112°F.

Which one of the following is the approximate condenser heat transfer rate?

A. 3.1×10^8 Btu/hr

B. 3.8×10^8 Btu/hr

C. 4.5×10^8 Btu/hr

D. 5.2×10^8 Btu/hr

ANSWER: D.

TOPIC: 193003
KNOWLEDGE: K1.25 [3.3/3.4]
QID: P4339 (B4338)

A nuclear power plant is operating at 100 percent power. The main turbine has one high pressure (HP) unit and one low pressure (LP) unit.

Main steam enters the HP unit of the main turbine with the following parameters:

Pressure = 1,000 psia
Quality = 100 percent

The exhaust steam exits the HP unit at 200 psia, then goes through a moisture separator-reheater, and enters the LP units with the following parameters:

Pressure = 200 psia
Temperature = 500°F

The main condenser pressure is 1.0 psia. Assume that each unit of the main turbine is 100 percent efficient.

The higher enthalpy steam is being supplied to the _____ unit of the main turbine; and the greater moisture content is found in the exhaust of the _____ unit.

A. LP; LP

B. LP; HP

C. HP; LP

D. HP; HP

ANSWER: A.

TOPIC: 193003
KNOWLEDGE: K1.25 [3.3/3.4]
QID: P4739 (B4738)

Consider a 100 lbm quantity of a saturated steam-water mixture at standard atmospheric pressure. The mixture has a quality of 70 percent. Assume that pressure remains constant and there is no heat loss from the mixture.

Which one of the following is the approximate heat addition needed to increase the quality of the mixture to 100 percent?

A. 5,400 Btu

B. 12,600 Btu

C. 29,100 Btu

D. 67,900 Btu

ANSWER: C.

TOPIC: 193003
KNOWLEDGE: K1.25 [3.3/3.4]
QID: P4839 (B4838)

An open vessel contains 1.0 lbm-mass of water at 204°F and standard atmospheric pressure. If 16.0 Btu of heat is added to the water, the water temperature will rise by about _____; and approximately _____ of the water mass will become steam.

A. 8°F; 1 percent

B. 8°F; 10 percent

C. 16°F; 1 percent

D. 16°F; 10 percent

ANSWER: A.

TOPIC: 193003
KNOWLEDGE: K1.25 [3.3/3.4]
QID: P4939 (B4938)

Water enters an ideal convergent-divergent nozzle with the following parameters:

Pressure = 300 psia
Temperature = 102°F
Velocity = 50 ft/sec

The velocity of the water at the throat of the nozzle is 200 ft/sec.

Given that nozzles convert enthalpy to kinetic energy, and assuming no heat transfer to or from the nozzle, what is the approximate pressure of the water at the throat of the nozzle?

A. 296 psia

B. 150 psia

C. 75 psia

D. 50 psia

ANSWER: D.

TOPIC: 193003
KNOWLEDGE: K1.25 [3.3/3.4]
QID: P5039 (B5038)

An open vessel contains 1.0 lbm of water at 206°F and standard atmospheric pressure. Which one of the following will be caused by the addition of 12.0 Btu to the water?

A. The water temperature will rise by about 6°F and none of the water will vaporize.

B. The water temperature will rise by about 6°F and some of the water will vaporize.

C. The water temperature will rise by about 12°F and none of the water will vaporize.

D. The water temperature will rise by about 12°F and some of the water will vaporize.

ANSWER: B.

TOPIC: 193003
KNOWLEDGE: K1.25 [3.3/3.4]
QID: P5139 (B5138)

A feedwater pump discharges into a 16-inch diameter discharge line. Given the following:

Pump discharge pressure = 950 psia
Feedwater temperature = 300°F
Feedwater velocity = 15.2 ft/sec

What is the feedwater pump discharge mass flow rate?

A. 1.1×10^6 lbm/hr

B. 4.4×10^6 lbm/hr

C. 1.8×10^7 lbm/hr

D. 5.3×10^7 lbm/hr

ANSWER: B.

TOPIC: 193003
KNOWLEDGE: K1.25 [3.3/3.4]
QID: P5239 (B5238)

Dry saturated steam enters a frictionless convergent-divergent nozzle with the following parameters:

Pressure = 850 psia
Velocity = 10 ft/sec

The steam at the throat of the nozzle has a subsonic velocity of 950 ft/sec.

Given that nozzles convert enthalpy to kinetic energy, and assuming no heat transfer to or from the nozzle, what is the enthalpy of the steam at the throat of the nozzle?

A. 1,162 Btu/lbm

B. 1,171 Btu/lbm

C. 1,180 Btu/lbm

D. 1,189 Btu/lbm

ANSWER: C.

TOPIC: 193003
KNOWLEDGE: K1.25 [3.3/3.4]
QID: P5439 (B5438)

An ideal auxiliary steam turbine exhausts to the atmosphere. The steam turbine is supplied with dry saturated steam at 900 psia. Which one of the following is the maximum specific work (Btu/lbm) that can be extracted from the steam by the steam turbine?

A. 283 Btu/lbm

B. 670 Btu/lbm

C. 913 Btu/lbm

D. 1,196 Btu/lbm

ANSWER: A.

TOPIC: 193003
KNOWLEDGE: K1.25 [3.3/3.4]
QID: P5639

An ideal steam turbine exhausts to a steam condenser at 1.0 psia. The turbine is driven by dry saturated steam at 600 psia. What is the work (Btu/hr) of the steam turbine if the turbine steam flow rate is 200,000 lbm/hr?

A. 7.9×10^6 Btu/hr

B. 1.6×10^7 Btu/hr

C. 7.9×10^7 Btu/hr

D. 1.6×10^8 Btu/hr

ANSWER: C.

TOPIC: 193003
KNOWLEDGE: K1.25 [3.3/3.4]
QID: P5739 (B5738)

A steam turbine exhausts to a steam condenser at 1.0 psia. The steam turbine is supplied with dry saturated steam at 900 psia at a flow rate of 200,000 lbm/hr. What is the approximate rate of condensate addition to the condenser hotwell in gallons per minute?

A. 400 gpm

B. 2,400 gpm

C. 4,000 gpm

D. 24,000 gpm

ANSWER: A.

TOPIC: 193003
KNOWLEDGE: K1.25 [3.3/3.4]
QID: P5939

What happens to the enthalpy of the saturated steam in a steam generator (SG) as heat addition increases SG pressure from 100 psia to 1,000 psia?

A. The enthalpy increases during the entire pressure increase.

B. The enthalpy initially increases and then decreases.

C. The enthalpy decreases during the entire pressure increase.

D. The enthalpy initially decreases and then increases.

ANSWER: B.

TOPIC: 193003
KNOWLEDGE: K1.25 [3.3/3.4]
QID: P6139 (B6113)

Water enters a positive displacement pump at 50 psig and 90°F. What is the available net positive suction head for the pump?

A. 80 feet

B. 114 feet

C. 133 feet

D. 148 feet

ANSWER: D.

TOPIC: 193003
KNOWLEDGE: K1.25 [3.3/3.4]
QID: P6339 (B6338)

Dry saturated steam is flowing to a reheater. The reheater inlet and outlet pressures are both 260 psia. If the reheater adds 60.5 Btu/lbm to the steam, what is the temperature of the steam exiting the reheater?

A. 405°F

B. 450°F

C. 465°F

D. 500°F

ANSWER: D.

TOPIC: 193003
KNOWLEDGE: K1.25 [3.3/3.4]
QID: P6439 (B6438)

An open vessel contains 5.0 lbm of water at constant standard atmospheric pressure. The water has been heated to the saturation temperature. If an additional 1,600 Btu is added to the water, the water temperature will _____, and _____ than 50 percent of the water will vaporize.

A. increase significantly; less

B. increase significantly; more

C. remain about the same; less

D. remain about the same; more

ANSWER: C.

TOPIC: 193003
KNOWLEDGE: K1.25 [3.3/3.4]
QID: P6639 (B6638)

Dry saturated steam at 240 psia enters an ideal low pressure (LP) turbine and exhausts to a steam condenser at 1.0 psia. Compared to the LP turbine entry conditions, the volumetric flow rate of the steam leaving the LP turbine will be about _____ times larger.

A. 103

B. 132

C. 174

D. 240

ANSWER: B.

TOPIC: 193003
KNOWLEDGE: K1.25 [3.3/3.4]
QID: P7239 (B7238)

An open vessel contains 1.0 lbm of water at 120°F and standard atmospheric pressure. Which one of the following will be caused by the addition of 540 Btu to the water?

A. The water temperature will increase to approximately 212°F; and less than 50 percent of the water will vaporize.

B. The water temperature will increase to approximately 212°F; and more than 50 percent of the water will vaporize.

C. The water temperature will increase to significantly higher than 212°F; and less than 50 percent of the water will vaporize.

D. The water temperature will increase to significantly higher than 212°F; and more than 50 percent of the water will vaporize.

ANSWER: A.

TOPIC: 193003
KNOWLEDGE: K1.25 [3.3/3.4]
QID: P7339 (B7338)

Dry saturated steam at 1,000 psia enters an ideal high pressure (HP) turbine and exhausts at 100 psia. The HP turbine exhaust then enters an ideal low pressure (LP) turbine and exhausts to a steam condenser at 1.5 psia. Which one of the following will cause the HP and LP turbines to produce more equal power? (Assume all pressures remain the same unless stated otherwise.)

A. Reheat the HP turbine exhaust.

B. Lower the steam condenser pressure.

C. Remove the moisture from the HP turbine exhaust.

D. Decrease the pressure of the dry saturated steam entering the HP turbine.

ANSWER: C.

TOPIC: 193003
KNOWLEDGE: K1.25 [3.3/3.4]
QID: P7439

A nuclear power plant experienced a reactor trip. One hour after the trip, core cooling is being accomplished by relieving dry saturated steam from a steam generator (SG). Water level in the SG is being maintained by an operating feedwater pump. Average fuel temperature is stable.

Given the following current conditions:

Core decay heat rate	=	33 MW
SG pressure	=	1,000 psia
Feedwater temperature	=	90°F

For the above conditions, approximately what feedwater flow rate is needed to maintain a constant mass of water in the SG?

A. 100,000 lbm/hr

B. 125,000 lbm/hr

C. 170,000 lbm/hr

D. 215,000 lbm/hr

ANSWER: A.

TOPIC: 193003
KNOWLEDGE: K1.25 [3.3/3.4]
QID: P7539 (B7538)

Subcooled water is flowing through a heat exchanger with the following parameters:

Inlet temperature = 75°F
Outlet temperature = 120°F
Mass flow rate = 6.0×10^4 lbm/hr

What is the approximate heat transfer rate in the heat exchanger?

A. 1.1×10^6 Btu/hr

B. 2.1×10^6 Btu/hr

C. 2.7×10^6 Btu/hr

D. 3.3×10^6 Btu/hr

ANSWER: C.

TOPIC: 193003
KNOWLEDGE: K1.25 [3.3/3.4]
QID: P7609 (B7609)

A main condenser is operating at 1.0 psia. If 20,000 ft^3 of dry saturated steam is condensed to saturated water in the condenser, what will be the approximate volume of the saturated water?

A. 1 ft^3

B. 10 ft^3

C. 100 ft^3

D. 1,000 ft^3

ANSWER: A.

TOPIC: 193003
KNOWLEDGE: K1.25 [3.3/3.4]
QID: P7629 (B7629)

An open vessel contains 2.0 lbm of water at 200°F and standard atmospheric pressure. Which one of the following will be caused by the addition of 16.0 Btu to the water?

A. The water temperature will increase, and all of the water will boil off.

B. The water temperature will increase, and none of the water will boil off.

C. The water temperature will rise to 212°F, and some of the water will boil off.

D. The water temperature will rise to 216°F, and some of the water will boil off.

ANSWER: B.

TOPIC: 193003
KNOWLEDGE: K1.25 [3.3/3.4]
QID: P7659 (B7659)

Dry saturated steam at 900 psia enters an ideal high pressure (HP) turbine and exhausts at 240 psia. How much heat, if any, must be added to the HP turbine exhaust to produce dry saturated steam at 240 psia?

A. 0 Btu/lbm

B. 11 Btu/lbm

C. 111 Btu/lbm

D. 155 Btu/lbm

ANSWER: C.

TOPIC: 193003
KNOWLEDGE: K1.25 [3.3/3.4]
QID: P7679 (B7679)

Dry saturated steam enters a turbine at 1000 psia with the turbine exhaust pressure at 2 psia. The efficiency of the turbine is 85 percent. What is the approximate specific work output of the turbine?

A. 329 Btu/lbm

B. 355 Btu/lbm

C. 387 Btu/lbm

D. 455 Btu/lbm

ANSWER: A.

TOPIC: 193003
KNOWLEDGE: K1.25 [3.3/3.4]
QID: P7699 (B7699)

Saturated steam at 900 psia enters a high pressure (HP) turbine and exhausts at 200 psia. The HP turbine exhaust passes through a 100 percent efficient moisture separator (with no heat gain or loss) before it enters a low pressure (LP) turbine. What is the enthalpy of the 200 psia steam entering the LP turbine?

A. 1,028 Btu/lbm

B. 1,076 Btu/lbm

C. 1,107 Btu/lbm

D. 1,199 Btu/lbm

ANSWER: D.

TOPIC: 193004
KNOWLEDGE: K1.11 [2.4/2.5]
QID: P74 (B2277)

Condensate depression is the process of...

A. removing condensate from turbine exhaust steam.

B. spraying condensate into turbine exhaust steam.

C. heating turbine exhaust steam above its saturation temperature.

D. cooling turbine exhaust steam below its saturation temperature.

ANSWER: D.

TOPIC: 193004
KNOWLEDGE: K1.11 [2.4/2.5]
QID: P274

Excessive heat removal from the low pressure turbine exhaust steam in the main condenser will result in...

A. thermal shock.

B. loss of condenser vacuum.

C. condensate depression.

D. fluid compression.

ANSWER: C.

TOPIC: 193004
KNOWLEDGE: K1.11 [2.4/2.5]
QID: P477 (B277)

Main condenser pressure is 1.0 psia. During the cooling process in the condenser, the temperature of the low pressure turbine exhaust decreases to 100°F, at which time it is a...

A. saturated liquid.

B. saturated vapor.

C. subcooled liquid.

D. superheated vapor.

ANSWER: C.

TOPIC: 193004
KNOWLEDGE: K1.11 [2.4/2.5]
QID: P576 (B2676)

Which one of the following explains why condensate subcooling is necessary in a nuclear power plant steam cycle?

A. To provide a better condenser vacuum.

B. To maximize overall steam cycle thermal efficiency.

C. To provide net positive suction head for the condensate pumps.

D. To minimize turbine blade and condenser tube erosion by entrained moisture.

ANSWER: C.

TOPIC: 193004
KNOWLEDGE: K1.11 [2.4/2.5]
QID: P876 (B1876)

Which one of the following is the approximate condensate subcooling in a steam condenser operating at 26 inches Hg vacuum with a condensate temperature of 100°F?

A. 2°F

B. 19°F

C. 25°F

D. 53°F

ANSWER: C.

TOPIC: 193004
KNOWLEDGE: K1.11 [2.4/2.5]
QID: P1076

Which one of the following is a positive effect of having condensate depression in the main condenser?

A. Increased secondary cycle efficiency.

B. Increased feedwater temperature entering the steam generators.

C. Increased net positive suction head available to the condensate pumps.

D. Increased inventory in the main condenser hotwell.

ANSWER: C.

TOPIC: 193004
KNOWLEDGE: K1.11 [2.4/2.5]
QID: P1176 (B2176)

A nuclear power plant is operating at 80 percent power with 5°F of condensate depression in the main condenser. If the condensate depression increases to 10°F, the steam cycle thermal efficiency will _____; and the condensate pumps will operate _____ cavitation.

A. increase; closer to

B. increase; farther from

C. decrease; closer to

D. decrease; farther from

ANSWER: D.

TOPIC: 193004
KNOWLEDGE: K1.11 [2.4/2.5]
QID: P1376

What is the approximate value of condensate depression in a steam condenser operating at 2.0 psia with a condensate temperature of 115°F?

A. 9°F

B. 11°F

C. 13°F

D. 15°F

ANSWER: B.

TOPIC: 193004
KNOWLEDGE: K1.11 [2.4/2.5]
QID: P1576 (B2976)

What is the approximate condensate depression in a condenser operating at 28 inches Hg vacuum with a condensate temperature of 100°F?

A. Less than 2°F

B. 3°F to 5°F

C. 6°F to 8°F

D. 9°F to 11°F

ANSWER: A.

TOPIC: 193004
KNOWLEDGE: K1.11 [2.4/2.5]
QID: P1977

Condensate is collecting in a main condenser hotwell at 90°F with a condenser pressure of 28 inches Hg vacuum. Which one of the following will improve steam cycle efficiency?

A. Main condenser cooling water flow rate decreases by 5 percent with no change in condenser vacuum.

B. Main condenser cooling water inlet temperature decreases by 10°F with no change in condenser vacuum.

C. Main condenser vacuum decreases to 27 inches Hg vacuum due to buildup of noncondensible gases.

D. Steam flow through the turbine decreases by 10 percent with no change in condenser vacuum.

ANSWER: A.

TOPIC: 193004
KNOWLEDGE: K1.11 [2.4/2.5]
QID: P2276 (B78)

The steam cycle thermal efficiency of a nuclear power plant can be increased by...

A. decreasing power from 100 percent to 25 percent.

B. removing a high-pressure feedwater heater from service.

C. lowering condenser vacuum from 29 inches to 25 inches.

D. decreasing the amount of condensate depression (subcooling).

ANSWER: D.

TOPIC: 193004
KNOWLEDGE: K1.11 [2.4/2.5]
QID: P2476 (B2077)

A nuclear power plant is operating at 90 percent of rated power. Main condenser pressure is 1.69 psia and hotwell condensate temperature is 120°F.

Which one of the following describes the effect of a 5 percent decrease in cooling water flow rate through the main condenser on steam cycle thermal efficiency?

A. Efficiency will increase because condensate depression will decrease.

B. Efficiency will increase because the work output of the main turbine will increase.

C. Efficiency will decrease because condensate depression will increase.

D. Efficiency will decrease because the work output of the main turbine will decrease.

ANSWER: D.

TOPIC: 193004
KNOWLEDGE: K1.11 [2.4/2.5]
QID: P2576 (B2576)

A nuclear power plant is operating at 80 percent power with 5°F of condensate depression in the main condenser. If the condensate depression decreases to 2°F, the steam cycle thermal efficiency will _____; and the condensate pumps will operate _____ cavitation.

A. increase; closer to

B. increase; farther from

C. decrease; closer to

D. decrease; farther from

ANSWER: A.

TOPIC: 193004
KNOWLEDGE: K1.11 [2.4/2.5]
QID: P2976

What is the approximate value of condensate depression in a condenser operating at 27 inches Hg vacuum with a condensate temperature of 100°F?

A. 2°F

B. 4°F

C. 8°F

D. 16°F

ANSWER: D.

TOPIC: 193004
KNOWLEDGE: K1.11 [2.4/2.5]
QID: P3576 (B1484)

A main condenser is operating at 28 inches Hg vacuum with a condensate outlet temperature of 92°F. Which one of the following is the approximate amount of condensate depression?

A. 5°F

B. 9°F

C. 13°F

D. 17°F

ANSWER: B.

TOPIC: 193004
KNOWLEDGE: K1.11 [2.4/2.5]
QID: P3876 (B3877)

Main turbine exhaust enters a main condenser and condenses at 126°F. The condensate is cooled to 100°F before entering the main condenser hotwell. Assuming main condenser vacuum does <u>not</u> change, which one of the following would improve the thermal efficiency of the steam cycle?

A. Increase condenser cooling water flow rate by 5 percent.

B. Decrease condenser cooling water flow rate by 5 percent.

C. Increase main condenser hotwell level by 5 percent.

D. Decrease main condenser hotwell level by 5 percent.

ANSWER: B.

TOPIC: 193004
KNOWLEDGE: K1.15 [2.8/2.8]
QID: P76

A nuclear power plant is maintained at 2,000 psia with a pressurizer temperature of 636°F. A pressurizer relief safety valve is leaking to a collection tank which is being held at 10 psig. With dry saturated steam in the pressurizer vapor space, which one of the following is the approximate temperature of the fluid just downstream of the relief valve?

A. 280°F

B. 240°F

C. 190°F

D. 170°F

ANSWER: B.

TOPIC: 193004
KNOWLEDGE: K1.15 [2.8/2.8]
QID: P148

A pressurizer relief valve is leaking by with the leakage being collected in a pressurizer relief tank. The pressurizer pressure is 2,200 psia and the relief tank pressure is 5 psig.

With dry saturated steam in the pressurizer vapor space, which one of the following is the condition of the fluid just downstream of the relief valve?

A. Superheated steam

B. Subcooled liquid

C. Dry saturated steam

D. Wet vapor

ANSWER: D.

TOPIC: 193004
KNOWLEDGE: K1.15 [2.8/2.8]
QID: P276

A reactor coolant system is being maintained at 1,000 psia. A leaky pressurizer safety/relief valve is slowly discharging to a collection tank, which is maintained at 5 psig.

With dry saturated steam in the pressurizer vapor space, what is the approximate enthalpy of the fluid entering the collection tank? (Assume no heat is lost from the discharge line.)

A. 1,210 Btu/lbm

B. 1,193 Btu/lbm

C. 1,178 Btu/lbm

D. 1,156 Btu/lbm

ANSWER: B.

TOPIC: 193004
KNOWLEDGE: K1.15 [2.8/2.8]
QID: P377

What is the approximate temperature and phase of the fluid just downstream of the pressurizer relief valve if it sticks partially open with 2,200 psia in the pressurizer and a 50 psia backpressure? (Assume the pressurizer vapor space contains dry saturated steam.)

A. 281°F, saturated

B. 281°F, superheated

C. 332°F, saturated

D. 332°F, superheated

ANSWER: A.

TOPIC: 193004
KNOWLEDGE: K1.15 [2.8/2.8]
QID: P677

A routine nuclear power plant shutdown is in progress with a steam bubble (dry saturated steam) in the pressurizer. Pressurizer pressure is 415 psig and pressurizer pressure and level are slowly decreasing. The operator suspects a pressurizer power-operated relief valve (PORV) is partially open but the position indicating lights are not working.

Which one of the following will be the approximate PORV tailpipe temperature if the PORV is partially open? (Assume downstream pressure is 15 psia and no heat is lost from the tailpipe.)

A. 212°F

B. 280°F

C. 330°F

D. 450°F

ANSWER: C.

TOPIC: 193004
KNOWLEDGE: K1.15 [2.8/2.8]
QID: P150

A nuclear power plant is operating at 100 percent power. As steam escapes via a main steam header-to-atmosphere leak, which one of the following steam parameters will increase?

A. Enthalpy

B. Pressure

C. Specific volume

D. Temperature

ANSWER: C.

TOPIC: 193004
KNOWLEDGE: K1.15 [2.8/2.8]
QID: P1277

A heatup and pressurization of the reactor coolant system (RCS) is in progress following a maintenance shutdown. RCS pressure is 800 psia with a steam bubble (97.5 percent quality saturated steam) in the pressurizer. Pressurizer power-operated relief valve (PORV) tailpipe temperature has been steadily rising. PORV downstream pressure is 30 psia.

Which one of the following will be the approximate PORV tailpipe temperature if a PORV is leaking by? (Assume no heat is lost from the tailpipe.)

A. 262°F

B. 284°F

C. 302°F

D. 324°F

ANSWER: B.

TOPIC: 193004
KNOWLEDGE: K1.15 [2.8/2.8]
QID: P1477

A nuclear power plant is operating at 100 percent power with steam generator pressure at 900 psia. A steam generator safety valve is leaking dry saturated steam to atmosphere.

Which one of the following is the approximate temperature of the escaping steam once it reaches standard atmospheric pressure?

A. 532°F

B. 370°F

C. 308°F

D. 212°F

ANSWER: C.

TOPIC: 193004
KNOWLEDGE: K1.15 [2.8/2.8]
QID: P1577

A heatup and pressurization of the reactor coolant system (RCS) is in progress following a maintenance shutdown. RCS pressure is 800 psia with a steam bubble (96.0 percent quality saturated steam) in the pressurizer. Pressurizer power-operated relief valve (PORV) tailpipe temperature has been steadily rising. PORV downstream pressure is 20 psia.

Which one of the following will be the approximate PORV tailpipe temperature if a PORV is leaking by?

A. 226°F

B. 258°F

C. 284°F

D. 320°F

ANSWER: B.

TOPIC: 193004
KNOWLEDGE: K1.15 [2.8/2.8]
QID: P1677

A nuclear power plant is being maintained at 2,220 psig. A pressurizer relief valve is leaking dry saturated steam to a collection tank, which is being held at 20 psig.

Which one of the following is the approximate temperature of the fluid downstream of the relief valve?

A. 162°F

B. 228°F

C. 259°F

D. 320°F

ANSWER: C.

TOPIC: 193004
KNOWLEDGE: K1.15 [2.8/2.8]
QID: P1777

Which one of the following is essentially a constant enthalpy process?

A. Steam flowing through an ideal convergent nozzle.

B. Condensation of turbine exhaust in a main condenser.

C. Expansion of main steam through the stages of an ideal turbine.

D. Throttling of main steam through a main turbine steam inlet valve.

ANSWER: D.

TOPIC: 193004
KNOWLEDGE: K1.15 [2.8/2.8]
QID: P2077 (B2075)

A nuclear power plant is operating with the following main steam parameters at the main turbine steam inlet valves:

Pressure = 900 psia
Quality = 98 percent

The main turbine steam chest pressure is 400 psia. Assuming an ideal throttling process, what is the quality of the steam in the steam chest?

A. 97 percent

B. 98 percent

C. 99 percent

D. 100 percent

ANSWER: A.

TOPIC: 193004
KNOWLEDGE: K1.15 [2.8/2.8]
QID: P2377

A heatup and pressurization of the reactor coolant system (RCS) is in progress following a maintenance shutdown. RCS pressure is 800 psia with a steam bubble (96.0 percent quality saturated steam) in the pressurizer. Pressurizer power-operated relief valve (PORV) tailpipe temperature has been steadily rising. PORV downstream pressure is 20 psia.

Which one of the following will be the approximate PORV tailpipe temperature and phase of the escaping fluid if a PORV is leaking by?

A. 258°F, saturated

B. 258°F, superheated

C. 228°F, saturated

D. 228°F, superheated

ANSWER: B.

TOPIC: 193004
KNOWLEDGE: K1.15 [2.8/2.8]
QID: P2876

Refer to the drawing of two 1,000 ft^3 pressure vessels with installed relief valves (see figure below).

Both vessels are in saturated conditions at 281°F and approximately 35 psig. Vessel A is completely filled with saturated water. Vessel B contains one-half saturated steam (100 percent quality) and one-half saturated water (0 percent quality) by volume. Both vessels are protected by identical relief valves.

If both relief valves begin to leak at a rate of 0.1 percent of design flow, the higher temperature fluid will initially be leaving the relief valve of vessel _____. And, if 100 lbm of fluid is released through both relief valves, the larger pressure decrease will occur in vessel _____.

A. A; A

B. A; B

C. B; A

D. B; B

ANSWER: D.

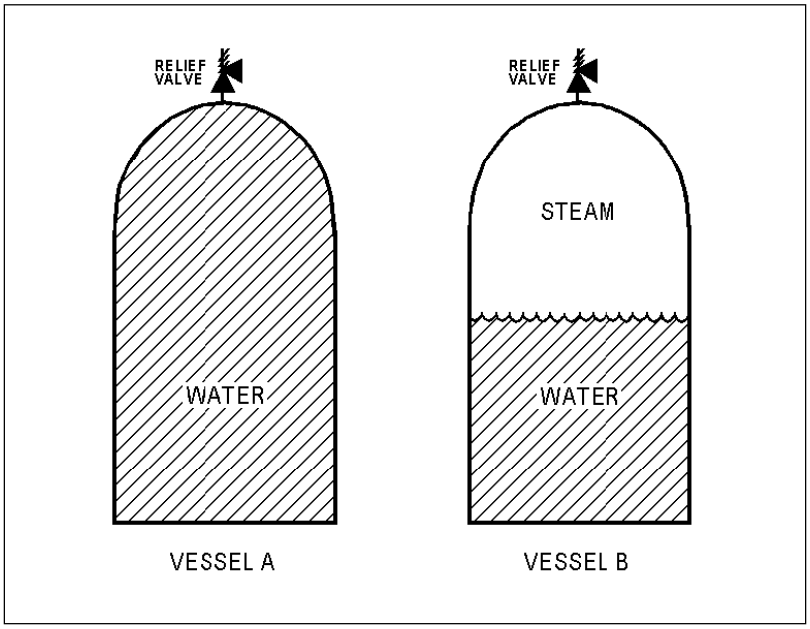

TOPIC: 193004
KNOWLEDGE: K1.15 [2.8/2.8]
QID: P3077 (B3074)

A nuclear power plant is operating at 100 percent power. Steam is escaping to atmosphere through a flange leak in a steam supply line to the low pressure section of the main turbine.

Given:

- Steam line pressure is 300 psia.
- Steam line steam temperature is 440°F.

What is the approximate temperature of the steam as it reaches standard atmospheric pressure?

A. 212°F

B. 268°F

C. 322°F

D. 358°F

ANSWER: D.

TOPIC: 193004
KNOWLEDGE: K1.15 [2.8/2.8]
QID: P3277

A nuclear power plant is operating at 100 percent power. Steam is escaping to atmosphere through a flange leak in a steam line that supplies the low pressure unit of the main turbine.

Given:

- Steam line pressure is 280 psia.
- Steam line steam temperature is 450°F.

What is the approximate temperature of the steam as it reaches standard atmospheric pressure?

A. 212°F

B. 268°F

C. 322°F

D. 378°F

ANSWER: D.

TOPIC: 193004
KNOWLEDGE: K1.15 [2.8/2.8]
QID: P3477

A pressurizer safety valve is leaking by, allowing the dry saturated steam in the pressurizer to flow to the pressurizer relief tank (PRT). The reactor has been shut down, and a plant cooldown and depressurization are in progress. PRT pressure is being maintained constant at 35 psia.

Which one of the following describes how the safety valve tailpipe temperature will be affected as pressurizer pressure slowly decreases from 1,500 psia to 500 psia? (Assume there is <u>no</u> ambient heat loss from the tailpipe.)

A. Increases, because the entropy of the pressurizer steam will be increasing.

B. Increases, because the enthalpy of the pressurizer steam will be increasing.

C. Decreases, because the mass flow rate of the leaking steam will be decreasing.

D. Decreases, because the temperature of the pressurizer steam will be decreasing.

ANSWER: B.

TOPIC: 193004
KNOWLEDGE: K1.15 [2.8/2.8]
QID: P3577 (B3575)

Dry saturated steam at 1,000 psia is being supplied to the inlet of a partially open steam throttle valve on a main turbine. Pressure in the steam chest downstream of the throttle valve is 150 psia. Assume a typical throttling process with no heat gain or loss to/from the steam.

When compared to the conditions at the inlet to the throttle valve, which one of the following describes the conditions in the steam chest for specific enthalpy and specific entropy?

	Steam Chest Specific Enthalpy	Steam Chest Specific Entropy
A.	About the same	About the same
B.	About the same	Significantly higher
C.	Significantly lower	About the same
D.	Significantly lower	Significantly higher

ANSWER: B.

TOPIC: 193004
KNOWLEDGE: K1.15 [2.8/2.8]
QID: P3677 (B3675)

A nuclear power plant is shut down and steam is escaping to atmosphere through a leak in a main steam line. The main steam line contains dry saturated steam at 300 psia. What is the approximate temperature of the steam as it reaches standard atmospheric pressure?

A. 212°F

B. 268°F

C. 322°F

D. 358°F

ANSWER: C.

TOPIC: 193004
KNOWLEDGE: K1.15 [2.8/2.8]
QID: P4040

A heatup and pressurization of a reactor coolant system (RCS) is in progress following a maintenance shutdown. RCS pressure is 1,000 psia with a steam bubble (dry saturated steam) in the pressurizer. Pressurizer power-operated relief valve (PORV) tailpipe temperature has been steadily rising. PORV downstream pressure is 40 psia.

Which one of the following will be the approximate PORV tailpipe temperature and phase of the escaping fluid if a PORV is leaking by?

A. 267°F, saturated

B. 267°F, superheated

C. 312°F, saturated

D. 312°F, superheated

ANSWER: D.

TOPIC: 193004
KNOWLEDGE: K1.15 [2.8/2.8]
QID: P5340 (B5338)

A nuclear power plant is operating with the following main steam parameters at the main turbine steam inlet valves:

Pressure = 900 psia
Quality = 99 percent

The main turbine steam chest pressure is 300 psia. Assuming an ideal throttling process, what is the quality of the steam in the steam chest?

A. 100 percent

B. 98 percent

C. 88 percent

D. 87 percent

ANSWER: B.

TOPIC: 193004
KNOWLEDGE: K1.15 [2.8/2.8]
QID: P5640

A pressurizer safety valve is leaking by, allowing 100 percent quality steam from the pressurizer to enter the discharge pipe, which remains at a constant pressure of 30 psig. Initial safety valve discharge pipe temperature is elevated but stable. Assume no heat loss from the safety valve discharge pipe.

Upon discovery of the leak, the reactor is shut down and a plant cooldown and depressurization are commenced. Throughout the cooldown and depressurization, dry saturated steam continues to leak through the pressurizer safety valve.

As pressurizer pressure decreases from 2,000 psig to 1,800 psig, the safety valve discharge pipe temperature will...

A. decrease, because the entropy of the safety valve discharge will decrease during the pressurizer pressure decrease.

B. decrease, because the enthalpy of the safety valve discharge will decrease during the pressurizer pressure decrease.

C. increase, because the safety valve discharge will become more superheated during the pressurizer pressure decrease.

D. remain the same, because the safety valve discharge will remain a saturated steam-water mixture at 30 psig.

ANSWER: D.

TOPIC: 193004
KNOWLEDGE: K1.15 [2.8/2.8]
QID: P6540 (B6538)

A nuclear power plant is operating at power. Steam is escaping to atmosphere through a flange leak in a steam line supplying the low pressure section of the main turbine.

Given:

- Steam line pressure is 200 psia.
- Steam line temperature is 400°F.

Assuming no heat transfer to/from the steam, what is the approximate temperature of the steam as it reaches atmospheric pressure?

A. 212°F

B. 284°F

C. 339°F

D. 375°F

ANSWER: C.

TOPIC: 193004
KNOWLEDGE: K1.15 [2.8/2.8]
QID: P7140 (B7138)

A nuclear power plant is operating with the following main steam parameters at the main turbine steam inlet valves:

Pressure = 1,050 psia
Quality = 100 percent

The main turbine steam chest pressure is 400 psia. Assuming an ideal throttling process, which one of the following describes the steam in the steam chest?

A. Saturated, 96 percent quality

B. Saturated, 98 percent quality

C. Saturated, 100 percent quality

D. Superheated

ANSWER: B.

TOPIC: 193004
KNOWLEDGE: K1.15 [2.8/2.8]
QID: P7610

A pressurizer safety valve is leaking by, allowing the dry saturated steam from the pressurizer to enter the discharge pipe, which remains at a constant pressure of 40 psia. Initial safety valve discharge pipe temperature is elevated but stable. Assume no heat loss occurs from the safety valve discharge pipe.

Upon discovery of the leak, the reactor is shut down, and a plant cooldown and depressurization are commenced. Throughout the cooldown and depressurization, dry saturated steam continues to leak through the pressurizer safety valve.

As pressurizer pressure decreases from 1,000 psia to 700 psia, the safety valve discharge pipe temperature will...

A. decrease, because the entropy of the safety valve discharge will decrease during the pressurizer pressure decrease in this range.

B. decrease, because the enthalpy of the safety valve discharge will decrease during the pressurizer pressure decrease in this range.

C. increase, because the safety valve discharge will become more superheated during the pressurizer pressure decrease in this range.

D. remain the same, because the safety valve discharge will remain a saturated steam-water mixture at 40 psia during the pressurizer pressure decrease in this range.

ANSWER: C.

TOPIC: 193004
KNOWLEDGE: K1.15 [2.8/2.8]
QID: P7619 (B7619)

A nuclear power plant is operating with the following main steam parameters at a partially open main turbine steam inlet valve:

Pressure = 1,000 psia
Quality = 100 percent

The main turbine steam chest pressure is 50 psia. Which one of the following describes the steam in the steam chest?

A. Saturated, 98 percent quality

B. Saturated, 99 percent quality

C. Saturated, 100 percent quality

D. Superheated

ANSWER: D.

TOPIC: 193005
KNOWLEDGE: K1.03 [2.5/2.6]
QID: P77

Overall nuclear power plant thermal efficiency will decrease if...

A. the temperature of the steam at the turbine exhaust increases.

B. additional moisture is removed from the steam entering the turbine.

C. the temperature of the feedwater entering the steam generator increases.

D. the amount of condensate depression (subcooling) in the main condenser decreases.

ANSWER: A.

TOPIC: 193005
KNOWLEDGE: K1.03 [2.5/2.6]
QID: P277

Which one of the following will cause overall nuclear power plant thermal efficiency to increase?

A. Increasing total steam generator blowdown from 30 gpm to 40 gpm.

B. Changing steam quality from 99.7 to 99.9 percent.

C. Bypassing a feedwater heater during normal plant operations.

D. Increasing condenser pressure from 1 psia to 2 psia.

ANSWER: B.

TOPIC: 193005
KNOWLEDGE: K1.03 [2.5/2.6]
QID: P378 (B3578)

Steam turbines X and Y are identical 100 percent efficient turbines that exhaust to a condenser at 1.0 psia. Dry saturated steam at 250 psia enters turbine X. Superheated steam at 250 psia and 500°F enters turbine Y.

Which one of the following lists the percentage of moisture at the exhaust of turbines X and Y?

	Turbine X	Turbine Y
A.	24.5%	20.5%
B.	26.3%	13.0%
C.	24.5%	13.0%
D.	26.3%	20.5%

ANSWER: A.

TOPIC: 193005
KNOWLEDGE: K1.03 [2.5/2.6]
QID: P379

Which one of the following actions will decrease overall nuclear power plant thermal efficiency?

A. Reducing turbine inlet steam moisture content.

B. Reducing condensate depression.

C. Increasing turbine exhaust pressure.

D. Increasing temperature of feedwater entering the steam generators.

ANSWER: C.

TOPIC: 193005
KNOWLEDGE: K1.03 [2.5/2.6]
QID: P478

To achieve maximum overall nuclear power plant thermal efficiency, feedwater should enter the steam generator (SG)_____ and the pressure difference between the SG and the condenser should be as _____ as possible.

A. close to saturation; great

B. close to saturation; small

C. as subcooled as practical; great

D. as subcooled as practical; small

ANSWER: A.

TOPIC: 193005
KNOWLEDGE: K1.03 [2.5/2.6]
QID: P878

Feedwater heating increases overall nuclear power plant thermal efficiency because...

A. the average temperature at which heat is transferred in the steam generators is increased.

B. less steam flow passes through the turbine, thereby increasing turbine efficiency.

C. increased feedwater temperature lowers the temperature at which heat is rejected in the condenser.

D. less power is required by the feedwater pumps to pump the warmer feedwater.

ANSWER: A.

TOPIC: 193005
KNOWLEDGE: K1.03 [2.5/2.6]
QID: P978

Which one of the following changes will increase the overall nuclear power plant thermal efficiency?

A. Decreasing the temperature of the feedwater entering the steam generators.

B. Decreasing the superheat of the steam entering the low pressure turbines.

C. Decreasing the circulating water flow rate through the main condenser.

D. Decreasing the concentration of noncondensible gases in the main condenser.

ANSWER: D.

TOPIC: 193005
KNOWLEDGE: K1.03 [2.5/2.6]
QID: P1378

Which one of the following actions will result in a <u>decrease</u> in overall nuclear power plant thermal efficiency?

A. Increasing the quality of the steam entering the main turbine.

B. Increasing the temperature of the feed water entering the steam generator.

C. Decreasing the amount of condensate depression in the main condenser.

D. Decreasing the amount of turbine steam extracted for feed water heating.

ANSWER: D.

TOPIC: 193005
KNOWLEDGE: K1.03 [2.5/2.6]
QID: P1478

Turbine X and turbine Y are ideal steam turbines that exhaust to a condenser at 1.0 psia. Turbine X is driven by dry saturated steam at 900 psia. Turbine Y is driven by superheated steam at 500 psia and 620°F.

The greater amount of specific work (Btu/lbm) is being performed by turbine _____, and the greater moisture content exists in the exhaust of turbine _____.

A. X; Y

B. X; X

C. Y; Y

D. Y; X

ANSWER: D.

TOPIC: 193005
KNOWLEDGE: K1.03 [2.5/2.6]
QID: P1678

Turbine X and turbine Y are ideal steam turbines that exhaust to a condenser at 1.0 psia. Turbine X is driven by dry saturated steam at 500 psia. Turbine Y is driven by dry saturated steam at 700 psia.

The greater amount of specific work (Btu/lbm) is being performed by turbine _____; and the greater moisture content exists in the exhaust of turbine _____.

A. X; X

B. X; Y

C. Y; X

D. Y; Y

ANSWER: D.

TOPIC: 193005
KNOWLEDGE: K1.03 [2.5/2.6]
QID: P1878 (B1879)

A nuclear power plant is operating at 85 percent power when the extraction steam to a high pressure feedwater heater is isolated. After the transient, the operator returns reactor power to 85 percent and stabilizes the plant. Compared to the conditions just prior to the transient, the current main generator output (MW) is...

A. higher, because increased steam flow to the main turbine caused the main generator to pick up load.

B. lower, because decreased steam flow to the main turbine caused the main generator to reject load.

C. higher, because the steam cycle thermal efficiency has increased.

D. lower, because the steam cycle thermal efficiency has decreased.

ANSWER: D.

TOPIC: 193005
KNOWLEDGE: K1.03 [2.5/2.6]
QID: P1980 (B1679)

A nuclear power plant is initially operating at 85 percent reactor power when extraction steam to a high-pressure feedwater heater is isolated. Main generator load is returned to its initial value. When the plant stabilizes, reactor power will be _____ than 85 percent; and the steam cycle thermal efficiency will be _____.

A. greater; lower

B. greater; higher

C. less; lower

D. less; higher

ANSWER: A.

TOPIC: 193005
KNOWLEDGE: K1.03 [2.5/2.6]
QID: P2078

A nuclear power plant is operating at 90 percent power. Main condenser pressure is 1.7 psia and hotwell condensate temperature is 120°F.

If main condenser cooling water flow rate is reduced by 5 percent, overall steam cycle efficiency will...

A. increase, because condensate depression will decrease.

B. decrease, because condensate depression will increase.

C. increase, because the work output of the main turbine will increase.

D. decrease, because the work output of the main turbine will decrease.

ANSWER: D.

TOPIC: 193005
KNOWLEDGE: K1.03 [2.5/2.6]
QID: P2178 (B2178)

If superheating of the inlet steam to a low pressure (LP) turbine is reduced, LP turbine work output will _____; and LP turbine exhaust moisture content will _____. (Assume steam mass flow rate does <u>not</u> change.)

A. remain the same; increase

B. remain the same; decrease

C. decrease; increase

D. decrease; decrease

ANSWER: C.

TOPIC: 193005
KNOWLEDGE: K1.03 [2.5/2.6]
QID: P2278 (B2978)

If the moisture content of the steam supplied to a main turbine increases, turbine work will...
(Assume the total mass flow rate does not change.)

A. decrease, because the enthalpy of the moist steam being supplied to the turbine has decreased.

B. decrease, because moist steam is more likely to leak between turbine stages.

C. increase, because the enthalpy of the moist steam being supplied to the turbine has increased.

D. increase, because moist steam is less likely to leak between turbine stages.

ANSWER: A.

TOPIC: 193005
KNOWLEDGE: K1.03 [2.5/2.6]
QID: P2478

Turbine X is an ideal steam turbine that exhausts to a condenser at 1.0 psia. Turbine X is driven by dry saturated steam at 500 psia. Which one of the following lists the approximate specific work output of turbine X and the moisture content of the steam exiting turbine X?

	Specific Work	Moisture Content
A.	388 Btu/lbm	72%
B.	388 Btu/lbm	28%
C.	817 Btu/lbm	72%
D.	817 Btu/lbm	28%

ANSWER: B.

TOPIC: 193005
KNOWLEDGE: K1.03 [2.5/2.6]
QID: P2678 (B1978)

If the moisture content of the steam supplied to a turbine decreases, the steam cycle thermal efficiency will increase because the...

A. enthalpy of the steam being supplied to the turbine has increased.

B. mass flow rate of the steam through the turbine has increased.

C. reheat capacity of the turbine extraction steam has increased.

D. the operating temperature of the turbine blades has increased.

ANSWER: A.

TOPIC: 193005
KNOWLEDGE: K1.03 [2.5/2.6]
QID: P2778 (B2774)

The theoretical maximum efficiency of a steam cycle is given by the equation:

$$Eff_{max} = (1 - T_{out}/T_{in}) \times 100\%$$

where T_{out} is the absolute temperature for heat rejection and T_{in} is the absolute temperature for heat addition. (Fahrenheit temperature is converted to absolute temperature by adding 460°F.)

A nuclear power plant is operating with a stable steam generator pressure of 900 psia. What is the approximate theoretical maximum steam cycle efficiency this plant can achieve by establishing its main condenser vacuum at 1.0 psia?

A. 35 percent

B. 43 percent

C. 65 percent

D. 81 percent

ANSWER: B.

TOPIC: 193005
KNOWLEDGE: K1.03 [2.5/2.6]
QID: P3078 (B3077)

Which one of the following will be caused by a decrease in main condenser vacuum (higher absolute pressure) in a nuclear power plant operating at 100 percent power? (Assume that main steam and main condenser circulating water mass flow rates do not change.)

A. Decrease in the condensate temperature.

B. Decrease in the ideal steam cycle thermal efficiency.

C. Decrease in the condensate pump required net positive suction head.

D. Decrease in the mass of noncondensible gases in the condenser.

ANSWER: B.

TOPIC: 193005
KNOWLEDGE: K1.03 [2.5/2.6]
QID: P3378 (B1278)

A nuclear power plant was initially operating at steady-state 90 percent reactor power when extraction steam to the feedwater heaters was isolated. With extraction steam still isolated, reactor power was returned to 90 percent and the plant was stabilized.

Compared to the initial main generator MW output, the current main generator MW output is...

A. lower, because the steam cycle is less efficient.

B. higher, because the steam cycle is less efficient.

C. lower, because more steam heat energy is available to the main turbine.

D. higher, because more steam heat energy is available to the main turbine.

ANSWER: A.

TOPIC: 193005
KNOWLEDGE: K1.03 [2.5/2.6]
QID: P4441

Consider the steam cycle thermal efficiency of a nuclear power plant operating at rated power.

If the pressure at which saturated steam is produced in the steam generators is increased, thermal efficiency will _____; and if the temperature of the feedwater entering the steam generators is increased, thermal efficiency will _____.

A. increase; increase

B. increase; decrease

C. decrease; increase

D. decrease; decrease

ANSWER: A.

TOPIC: 193005
KNOWLEDGE: K1.03 [2.5/2.6]
QID: P7241 (B7240)

A nuclear power plant has a thermal power rating of 3,200 MW. When the plant operates at 100 percent power, the main generator produces 1,200 MW at a 0.95 power factor. Plant modifications are planned that will upgrade the feedwater heaters and moisture separator/reheaters without changing the plant's thermal power rating. If the plant modifications improve plant thermal efficiency by 2 percent, what will be the resulting main generator electrical output at 100 percent reactor power with the same power factor?

A. 1,204 MW

B. 1,224 MW

C. 1,244 MW

D. 1,264 MW

ANSWER: D.

TOPIC: 193005
KNOWLEDGE: K1.03 [2.5/2.6]
QID: P7700 (B7700)

A nuclear reactor has a thermal power rating of 3,200 MW. When the reactor operates at 100 percent power, the main generator produces 1,200 MW at a 0.95 power factor. Modifications are planned that will upgrade major power plant equipment without changing the reactor's thermal power rating. If the modifications improve the power plant's thermal efficiency by 3 percent, what will be the resulting main generator electrical output with the same power factor at 100 percent reactor power?

A. 1,224 MW

B. 1,236 MW

C. 1,264 MW

D. 1,296 MW

ANSWER: D.

TOPIC: 193006
KNOWLEDGE: K1.04 [3.4/3.6]
QID: P78

The possibility of water hammer in a liquid system is minimized by...

A. maintaining temperature above the saturation temperature.

B. starting centrifugal pumps with the casing vent valve fully open.

C. starting positive displacement pumps with the discharge valve closed.

D. venting systems prior to starting centrifugal pumps.

ANSWER: D.

TOPIC: 193006
KNOWLEDGE: K1.04 [3.4/3.6]
QID: P278

Which one of the following methods will increase the possibility and/or severity of water hammer?

A. Opening and closing system valves slowly.

B. Venting fluid systems prior to starting a pump.

C. Starting a centrifugal pump with the discharge valve fully open.

D. Starting a centrifugal pump with the discharge valve fully closed.

ANSWER: C.

TOPIC: 193006
KNOWLEDGE: K1.04 [3.4/3.6]
QID: P679 (B279)

A sudden stop of fluid flow in a piping system, due to rapid closure of an isolation valve, will most likely result in...

A. check valve slamming.

B. pump runout.

C. water hammer.

D. pressurized thermal shock.

ANSWER: C.

TOPIC: 193006
KNOWLEDGE: K1.04 [3.4/3.6]
QID: P879

One reason for keeping condensate out of the steam lines is to...

A. minimize corrosion buildup.

B. reduce heat losses.

C. eliminate steam traps.

D. prevent water/steam hammer.

ANSWER: D.

TOPIC: 193006
KNOWLEDGE: K1.04 [3.4/3.6]
QID: P1079

The possibility of water hammer will be increased by...

A. maintaining the discharge line filled with liquid on an automatically starting pump.

B. condensation in a steam line just prior to initiating flow.

C. warming steam lines prior to initiating steam flow.

D. slowly closing the discharge valve on an operating pump.

ANSWER: B.

TOPIC: 193006
KNOWLEDGE: K1.04 [3.4/3.6]
QID: P1279

To minimize the possibility of water hammer when initiating flow in a system, the operator should...

A. vent the system prior to initiating flow.

B. vent the system only after flow has been initiated.

C. fully open the pump discharge valve prior to starting a pump.

D. rapidly open the pump discharge valve after a pump is running.

ANSWER: A.

TOPIC: 193006
KNOWLEDGE: K1.04 [3.4/3.6]
QID: P1879 (B2779)

Which one of the following describes why large steam lines are gradually warmed instead of suddenly admitting full steam flow?

A. To minimize the possibility of stress corrosion cracking of the steam lines.

B. To minimize the total thermal expansion of the steam lines.

C. To minimize the potential for water hammer in the steam lines.

D. To minimize the heat loss from the steam lines.

ANSWER: C.

TOPIC: 193006
KNOWLEDGE: K1.04 [3.4/3.6]
QID: P2079 (B2081)

Which one of the following will minimize the possibility of water hammer?

A. Draining the discharge line of a centrifugal pump after shutdown.

B. Draining condensate out of steam lines before and after initiating flow.

C. Starting a centrifugal pump with its discharge valve fully open.

D. Starting a positive displacement pump with its discharge valve partially closed.

ANSWER: B.

TOPIC: 193006
KNOWLEDGE: K1.04 [3.4/3.6]
QID: P2279 (B2679)

Which one of the following operating practices minimizes the possibility of water hammer?

A. Change valve positions as rapidly as possible.

B. Start centrifugal pumps with the discharge valve throttled.

C. Start positive displacement pumps with the discharge valve closed.

D. Vent systems only after initiating system flow.

ANSWER: B.

TOPIC: 193006
KNOWLEDGE: K1.04 [3.4/3.6]
QID: P4042 (B4041)

Refer to the drawing of two lengths of 6-inch diameter pipe, each containing an identical automatic isolation valve. The actual pipe lengths are proportional to their symbols in the drawing

Water at 65°F is flowing at 1,000 gpm through each pipe. If the isolation valves instantly close, valve A piping will experience a pressure increase that is _____ the pressure increase experienced by valve B piping; and the pressure spike will dissipate quicker in the _____ length of pipe.

A. equal to; shorter

B. equal to; longer

C. less than; shorter

D. less than; longer

ANSWER: A.

TOPIC: 193006
KNOWLEDGE: K1.04 [3.4/3.6]
QID: P6242 (B6241)

Refer to the drawing of two lengths of 16-inch diameter pipe, each containing an identical automatic isolation valve. The actual pipe lengths are proportional to their symbols in the drawing.

Water is flowing at 10,000 gpm through each pipe when both isolation valves instantly close. Consider two cases:

Case 1: The water temperature upstream of both valves is 65°F.
Case 2: The water temperature is 65°F upstream of valve A, and 85°F upstream of valve B.

For which case(s), if any, will valve A experience a pressure spike that is greater than the pressure spike at valve B?

A. Case 1 only

B. Case 2 only

C. Both cases

D. Neither case

ANSWER: B.

TOPIC: 193006
KNOWLEDGE: K1.04 [3.4/3.6]
QID: P6742 (B6741)

Refer to the drawing of two lengths of 16-inch diameter pipe, each containing an identical automatic isolation valve. The actual pipe lengths are proportional to their symbols in the drawing.

Water is flowing at 10,000 gpm through each pipe when both isolation valves instantly close.

Consider two cases:

Case 1: The water temperature upstream of both valves is 65°F.
Case 2: The water temperature is 85°F upstream of valve A, and 65°F upstream of valve B.

For which case(s), if any, will valve A experience a pressure spike that is greater than the pressure spike at valve B?

A. Case 1 only

B. Case 2 only

C. Both cases

D. Neither case

ANSWER: D.

TOPIC: 193006
KNOWLEDGE: K1.04 [3.4/3.6]
QID: P7620 (B7620)

Which one of the following will result in a higher probability and/or severity of water hammer in a flowing water system?

A. Gradual pipe bends rather than sharp pipe bends.

B. Shorter pipe lengths rather than longer pipe lengths.

C. Lower initial flow rates rather than higher initial flow rates.

D. Shorter valve stroke times rather than longer valve stroke times.

ANSWER: D.

TOPIC: 193006
KNOWLEDGE: K1.05 [2.9/3.0]
QID: P380 (B383)

An 85 gpm leak to atmosphere has developed from a cooling water system that is operating at 100 psig. Which one of the following will be the approximate leak rate when system pressure has decreased to 50 psig?

A. 33 gpm

B. 41 gpm

C. 52 gpm

D. 60 gpm

ANSWER: D.

TOPIC: 193006
KNOWLEDGE: K1.05 [2.9/3.0]
QID: P579

Mass flow rate equals volumetric flow rate times...

A. specific volume.

B. density.

C. specific gravity.

D. velocity.

ANSWER: B.

TOPIC: 193006
KNOWLEDGE: K1.05 [2.9/3.0]
QID: P680 (B681)

A 55 gpm leak to atmosphere has developed from a cooling water system that is operating at 100 psig. Which one of the following will be the approximate leak rate when system pressure has decreased to 50 psig?

A. 28 gpm

B. 32 gpm

C. 39 gpm

D. 45 gpm

ANSWER: C.

TOPIC: 193006
KNOWLEDGE: K1.05 [2.9/3.0]
QID: P1382

A 75 gpm leak to atmosphere has developed from a cooling water system that is operating at 80 psig. Which one of the following will be the approximate leak rate when system pressure has decreased to 40 psig?

A. 38 gpm

B. 44 gpm

C. 53 gpm

D. 59 gpm

ANSWER: C.

TOPIC: 193006
KNOWLEDGE: K1.05 [2.9/3.0]
QID: P1580 (B1979)

A 60 gpm leak to atmosphere has developed from a cooling water system that is operating at 150 psig. Which one of the following will be the approximate leak rate when system pressure has decreased to 75 psig?

A. 15 gpm

B. 30 gpm

C. 42 gpm

D. 53 gpm

ANSWER: C.

TOPIC: 193006
KNOWLEDGE: K1.05 [2.9/3.0]
QID: P1679 (B2981)

A 100 gpm leak to atmosphere has developed from a cooling water system that is operating at 60 psig. Which one of the following will be the approximate leak rate when system pressure has decreased to 20 psig?

A. 33 gpm

B. 53 gpm

C. 58 gpm

D. 71 gpm

ANSWER: C.

TOPIC: 193006
KNOWLEDGE: K1.05 [2.9/3.0]
QID: P1779 (B1783)

A 100 gpm leak to atmosphere has developed from a cooling water system that is operating at 45 psig. Which one of the following will be the approximate leak rate when system pressure has decreased to 30 psig?

A. 25 gpm

B. 50 gpm

C. 67 gpm

D. 82 gpm

ANSWER: D.

TOPIC: 193006
KNOWLEDGE: K1.05 [2.9/3.0]
QID: P1986

A 47 gpm leak to atmosphere has developed from a cooling water system that is operating at 150 psig. Which one of the following will be the approximate leak rate when system pressure has decreased to 75 psig?

A. 24 gpm

B. 33 gpm

C. 39 gpm

D. 46 gpm

ANSWER: B.

TOPIC: 193006
KNOWLEDGE: K1.05 [2.9/3.0]
QID: P2080 (B2080)

An 80 gpm leak to atmosphere has developed from a cooling water system that is operating at 100 psig. Which one of the following will be the approximate leak rate when system pressure has decreased to 75 psig?

A. 69 gpm

B. 60 gpm

C. 51 gpm

D. 40 gpm

ANSWER: A.

TOPIC: 193006
KNOWLEDGE: K1.05 [2.9/3.0]
QID: P2379 (B2381)

A 60 gpm leak to atmosphere has developed from a cooling water system that is operating at 150 psig. Which one of the following will be the approximate leak rate when system pressure has decreased to 100 psig?

A. 27 gpm

B. 35 gpm

C. 40 gpm

D. 49 gpm

ANSWER: D.

TOPIC: 193006
KNOWLEDGE: K1.05 [2.9/3.0]
QID: P2779 (B2781)

An 80 gpm leak to atmosphere has developed from a cooling water system that is operating at 150 psig. Which one of the following will be the approximate leak rate when system pressure has decreased to 75 psig?

A. 20 gpm

B. 40 gpm

C. 49 gpm

D. 57 gpm

ANSWER: D.

TOPIC: 193006
KNOWLEDGE: K1.05 [2.9/3.0]
QID: P2980

An 80 gpm leak to atmosphere has developed from a cooling water system that is operating at 150 psig. Which one of the following will be the approximate leak rate when system pressure has decreased to 100 psig?

A. 36 gpm

B. 53 gpm

C. 56 gpm

D. 65 gpm

ANSWER: D.

TOPIC: 193006
KNOWLEDGE: K1.05 [2.9/3.0]
QID: P3080 (B3181)

A 75 gpm leak to atmosphere has developed from a cooling water system that is operating at 100 psig. Which one of the following will be the approximate leak rate when system pressure has decreased to 80 psig?

A. 26 gpm

B. 39 gpm

C. 56 gpm

D. 67 gpm

ANSWER: D.

TOPIC: 193006
KNOWLEDGE: K1.05 [2.9/3.0]
QID: P3780

Which one of the following describes the relationship between the main steam mass flow rate leaving a steam generator and the main feedwater mass flow rate entering the same steam generator at steady-state power operation? (Assume no other addition/removal of steam generator inventory.)

A. The mass flow rates will be the same only if downcomer level is constant.

B. The mass flow rates will be the same only if the reactor is operating near rated power.

C. The main steam mass flow rate is smaller than the main feedwater mass flow rate by the amount of moisture removed by the steam generator moisture separators.

D. The main steam mass flow rate is greater than the main feedwater mass flow rate by the amount of moisture removed by the steam generator moisture separators.

ANSWER: A.

TOPIC: 193006
KNOWLEDGE: K1.05 [2.9/3.0]
QID: P5342 (B5342)

A heat exchanger has the following initial cooling water inlet temperature and differential pressure (ΔP) parameters:

Inlet Temperature = 70°F
Heat Exchanger ΔP = 10 psi

Six hours later, the current heat exchanger cooling water parameters are:

Inlet Temperature = 85°F
Heat Exchanger ΔP = 10 psi

In comparison to the initial cooling water mass flow rate, the current mass flow rate is...

A. lower, because the density of the cooling water has decreased.

B. higher, because the velocity of the cooling water has increased.

C. the same, because the changes in cooling water velocity and density offset.

D. the same, because the heat exchanger cooling water ΔP is the same.

ANSWER: A.

TOPIC: 193006
KNOWLEDGE: K1.05 [2.9/3.0]
QID: P7342 (B7342)

An 80 gpm leak to atmosphere has developed from a cooling water system that is operating at 150 psig. Which one of the following will be the approximate leak rate when system pressure has decreased to 100 psig?

A. 70 gpm

B. 65 gpm

C. 53 gpm

D. 47 gpm

ANSWER: B.

TOPIC: 193006
KNOWLEDGE: K1.06 [2.8/2.9]
QID: P580

Reactor coolant system (RCS) hot leg temperature is constant at 568°F while RCS pressure is decreasing due to a small reactor coolant leak. Which one of the following RCS pressure ranges includes the pressure at which two-phase flow will first occur in the hot leg?

A. 1,250 to 1,201 psig

B. 1,200 to 1,151 psig

C. 1,150 to 1,101 psig

D. 1,100 to 1,051 psig

ANSWER: B.

TOPIC: 193006
KNOWLEDGE: K1.06 [2.8/2.9]
QID: P1180

Reactor coolant system (RCS) hot leg temperature is constant at 538°F while RCS pressure is decreasing due to a small reactor coolant leak. Which one of the following RCS pressure ranges includes the pressure at which two-phase flow will first occur in the hot leg?

A. 1,100 to 1,151 psig

B. 1,050 to 1,001 psig

C. 1,000 to 951 psig

D. 950 to 901 psig

ANSWER: D.

TOPIC: 193006
KNOWLEDGE: K1.06 [2.8/2.9]
QID: P1480

Reactor coolant system (RCS) hot leg temperature is constant at 520°F while RCS pressure is decreasing due to a small reactor coolant leak. Which one of the following pressure ranges includes the pressure at which two-phase flow will first occur in the hot leg?

A. 950 to 901 psig

B. 900 to 851 psig

C. 850 to 801 psig

D. 800 to 751 psig

ANSWER: D.

TOPIC: 193006
KNOWLEDGE: K1.06 [2.8/2.9]
QID: P2581

Reactor coolant system (RCS) hot leg temperature is constant at 552°F while RCS pressure is decreasing due to a small reactor coolant leak. Which one of the following pressure ranges includes the pressure at which two-phase flow will first occur in the hot leg?

A. 1,100 to 1,051 psig

B. 1,050 to 1,001 psig

C. 1,000 to 951 psig

D. 950 to 901 psig

ANSWER: B.

TOPIC: 193006
KNOWLEDGE: K1.06 [2.8/2.9]
QID: P7649 (B7649)

If the quality of a flowing steam-water mixture is known, what additional information, if any, is needed to determine the percent moisture content of the steam-water mixture?

A. The mass flow rate of the mixture.

B. The specific volume of the mixture.

C. The pressure and/or temperature of the mixture.

D. No additional information is needed.

ANSWER: D.

TOPIC: 193006
KNOWLEDGE: K1.06 [2.8/2.9]
QID: P7689

A nuclear power plant is initially operating at steady-state 100 percent power. If an unplanned load rejection causes the main generator load to rapidly decrease to 90 percent, the voids in the two-phase flow in the steam generator tube bundle region will initially _____; which causes indicated steam generator water level (measured in the downcomer) to initially _____.

A. shrink; decrease

B. shrink; increase

C. expand; decrease

D. expand; increase

ANSWER: A.

TOPIC: 193006
KNOWLEDGE: K1.07 [2.7/2.7]
QID: P581

A nuclear power plant is recovering from a loss of offsite power that caused all reactor coolant pumps (RCPs) to stop. Pressurizer level indication is off-scale high.

Which one of the following is most likely to occur if the steam generator (SG) temperatures are 50°F higher than their associated reactor coolant system (RCS) loop temperatures when an RCP is restarted?

A. Localized water hammer in the RCS.

B. Pressurized thermal shock to the SGs.

C. A large pressure spike throughout the RCS.

D. Inadvertent lifting of a SG atmospheric relief valve.

ANSWER: C.

TOPIC: 193006
KNOWLEDGE: K1.08 [2.8/1.8]
QID: P279 (B143)

A centrifugal water pump was returned to service after maintenance. However, the operator failed to vent the pump.

Compared to normal pump operating conditions, after the pump is started the operator will see a _____ flow rate and a _____ discharge head.

A. higher; lower

B. higher; higher

C. lower; lower

D. lower; higher

ANSWER: C.

TOPIC: 193006
KNOWLEDGE: K1.08 [2.8/2.8]
QID: P3481

Refer to the drawing of a cooling water system (see figure below).

Centrifugal pump A is circulating water at 100°F. Which one of the following will cause the centrifugal pump to operate closer to a condition in which gas/vapor binding can occur?

A. Surge tank level is raised by 5 percent.

B. Service water flow rate is decreased by 5 percent.

C. The pump discharge valve is repositioned to decrease cooling water system flow rate by 5 percent.

D. Makeup water containing a high concentration of total dissolved solids is added to the cooling water system.

ANSWER: B.

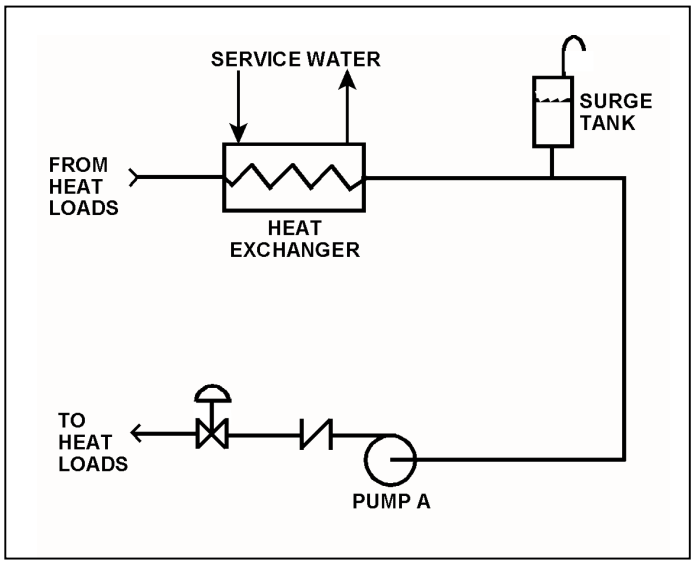

TOPIC: 193006
KNOWLEDGE: K1.10 [3.3/3.4]
QID: P80 (B79)

If a valve closure suddenly stops fluid flow, the resulting piping system pressure transient is referred to as...

A. cavitation.

B. shutoff head.

C. water hammer.

D. valve chatter.

ANSWER: C.

TOPIC: 193006
KNOWLEDGE: K1.10 [3.3/3.4]
QID: P381 (B380)

The major concern with starting a main feedwater pump with downstream fluid in a saturated condition is...

A. cavitation.

B. water hammer.

C. thermal shock.

D. positive reactivity addition.

ANSWER: B.

TOPIC: 193006
KNOWLEDGE: K1.10 [3.3/3.4]
QID: P2480 (B1180)

Which one of the following will increase the possibility of water hammer?

A. Opening and closing system valves very slowly.

B. Venting liquid systems only after initiating system flow.

C. Starting centrifugal pumps with the discharge valve closed.

D. Starting positive displacement pumps with the discharge valve open.

ANSWER: B.

TOPIC: 193006
KNOWLEDGE: K1.10 [3.3/3.4]
QID: P2880

The primary reason for slowly opening the discharge valve of a large motor-driven centrifugal cooling water pump after starting the pump is to minimize the...

A. net positive suction head requirements.

B. potential for a water hammer.

C. motor running current requirements.

D. potential for pump cavitation.

ANSWER: B.

TOPIC: 193006
KNOWLEDGE: K1.11 [3.1/3.3]
QID: P79

Cavitation in an operating pump can be caused by...

A. lowering the pump suction temperature.

B. throttling the pump suction valve.

C. increasing the pump backpressure.

D. increasing the pump suction pressure.

ANSWER: B.

TOPIC: 193006
KNOWLEDGE: K1.11 [3.1/3.3]
QID: P149

Cavitation of a centrifugal pump in an open system is indicated by _____ discharge pressure and _____ flow rate.

A. low; low

B. high; high

C. low; high

D. high; low

ANSWER: A.

TOPIC: 193006
KNOWLEDGE: K1.11 [3.1/3.3]
QID: P382 (B80)

Which one of the following is most likely to cause cavitation in an operating centrifugal pump?

A. Lowering the suction temperature.

B. Throttling the pump suction valve.

C. Throttling the pump discharge valve.

D. Decreasing the pump speed.

ANSWER: B.

TOPIC: 193006
KNOWLEDGE: K1.11 [3.1/3.3]
QID: P481

While on surveillance rounds, an operator notices that a centrifugal pump is making a great deal of noise (like marbles rattling inside the pump casing) and the pump discharge pressure is fluctuating.

This set of conditions indicates that the pump is experiencing...

A. runout.

B. cavitation.

C. bearing deterioration.

D. packing deterioration.

ANSWER: B.

TOPIC: 193006
KNOWLEDGE: K1.11 [3.1/3.3]
QID: P1181

Indications of pump cavitation include abnormally _____ pump discharge pressure and abnormally _____ pump flow rate.

A. low; low

B. low; high

C. high; low

D. high; high

ANSWER: A.

TOPIC: 193006
KNOWLEDGE: K1.11 [3.1/3.3]
QID: P1381

Cavitation is the formation of vapor bubbles in the _____ of a pump with the subsequent collapse of these bubbles in the pump _____.

A. impeller; casing

B. impeller; discharge piping

C. volute; casing

D. volute; discharge piping

ANSWER: A.

TOPIC: 193006
KNOWLEDGE: K1.11 [3.1/3.3]
QID: P2680 (B280)

Cavitation is the formation of vapor bubbles in the _____ pressure area of a pump followed by the _____ of these bubbles within the pump casing.

A. low; expansion

B. low; collapse

C. high; expansion

D. high; collapse

ANSWER: B.

TOPIC: 193006
KNOWLEDGE: K1.11 [3.1/3.3]
QID: P2981 (B1880)

Pump cavitation occurs when vapor bubbles are formed at the eye of a pump impeller...

A. because the localized flow velocity exceeds sonic velocity for the existing fluid temperature.

B. because the localized pressure exceeds the vapor pressure for the existing fluid temperature.

C. and enter a high pressure region of the pump where they collapse causing damaging pressure pulsations.

D. and are discharged from the pump where they expand into larger bubbles causing damaging pressure pulsations.

ANSWER: C.

TOPIC: 193006
KNOWLEDGE: K1.12 [2.5/2.6]
QID: P81

In an operating cooling water system with a constant water velocity, if water temperature decreases, system volumetric flow rate (gpm) will...

A. remain the same, because the density of the water has not changed.

B. increase, because the density of the water has increased.

C. remain the same, because the water velocity has not changed.

D. increase, because the viscosity of the water has increased.

ANSWER: C.

TOPIC: 193006
KNOWLEDGE: K1.12 [2.5/2.6]
QID: P281

Flow instruments that measure the mass flow rate of steam often have a density compensation feature because, for a steam pressure increase at a constant volumetric flow rate, steam density will _____ and the actual mass flow rate will _____.

A. decrease; increase

B. increase; decrease

C. increase; increase

D. decrease; decrease

ANSWER: C.

TOPIC: 193006
KNOWLEDGE: K1.12 [2.5/2.6]
QID: P982

A density-compensated flow instrument is being used to measure mass flow rate in a steam system. If the pressure of the steam decreases, indicated mass flow rate will: (Assume volumetric flow rate is constant.)

A. increase for all steam conditions.

B. decrease for all steam conditions.

C. increase, but only if the steam is saturated (not superheated).

D. decrease, but only if the steam is saturated (not superheated).

ANSWER: B.

TOPIC: 193006
KNOWLEDGE: K1.12 [2.5/2.6]
QID: P1083

A steam generator transient causes main steam pressure to decrease although the actual steam mass flow rate to the main turbine remains constant. If the main steam flow instrument is not density compensated, indicated steam mass flow rate will...

A. increase, due to the increased velocity of the steam.

B. increase, due to the increased density of the steam.

C. decrease, due to the decreased velocity of the steam.

D. decrease, due to the decreased density of the steam.

ANSWER: A.

TOPIC: 193006
KNOWLEDGE: K1.12 [2.5/2.6]
QID: P1182

A cooling water system is supplying 1.0 x 10^6 lbm/hour of flow at 100°F. Assuming volumetric flow rate does not change, which one of the following will be the mass flow rate in the system if cooling water temperature increases to 140°F?

A. 7.5 x 10^5 lbm/hr

B. 8.3 x 10^5 lbm/hr

C. 9.0 x 10^5 lbm/hr

D. 9.9 x 10^5 lbm/hr

ANSWER: D.

TOPIC: 193006
KNOWLEDGE: K1.12 [2.5/2.6]
QID: P1780

A reactor coolant system is supplying 1.0 x 10^8 lbm/hour of coolant flow at a temperature of 100°F. Assuming volumetric flow rate does not change, which one of the following is the approximate mass flow rate that will be supplied by the system if cooling water temperature increases to 400°F?

A. 1.2 x 10^8 lbm/hr

B. 1.1 x 10^8 lbm/hr

C. 9.2 x 10^7 lbm/hr

D. 8.7 x 10^7 lbm/hr

ANSWER: D.

TOPIC: 193006
KNOWLEDGE: K1.12 [2.5/2.6]
QID: P2182

A reactor coolant system is supplying 1.0 x 10^8 lbm/hr of coolant flow at a temperature of 100°F. Assuming volumetric flow rate does not change, which one of the following is the approximate mass flow rate that will be supplied by the system if coolant temperature increases to 500°F?

A. 1.2 x 10^8 lbm/hr

B. 1.1 x 10^8 lbm/hr

C. 8.7 x 10^7 lbm/hr

D. 7.9 x 10^7 lbm/hr

ANSWER: D.

TOPIC: 193006
KNOWLEDGE: K1.12 [2.5/2.6]
QID: P2681

A cooling water system is supplying 2,000 lbm/min coolant flow at a temperature of 100°F. Assuming volumetric flow rate does not change, which one of the following is the approximate mass flow rate that will be supplied by the system if cooling water temperature increases to 140°F?

A. 1,964 lbm/min

B. 1,980 lbm/min

C. 2,020 lbm/min

D. 2,036 lbm/min

ANSWER: B.

TOPIC: 193006
KNOWLEDGE: K1.12 [2.5/2.6]
QID: P2882

A steam generator transient causes main steam pressure to increase although the actual mass flow rate of steam remains constant. If the main steam flow instrument is not density compensated, the increased main steam pressure will cause indicated steam mass flow rate to...

A. increase, due to a higher steam velocity.

B. increase, due to a greater steam density.

C. decrease, due to a lower steam velocity.

D. decrease, due to a reduced steam density.

ANSWER: C.

TOPIC: 193006
KNOWLEDGE: K1.12 [2.5/2.6]
QID: P3081 (B3032)

The volumetric flow rate of cooling water entering a heat exchanger is 500 gpm.

Given the following:

- Cooling water pressure entering and leaving the heat exchanger is 10 psig.
- Cooling water inlet temperature is 90°F.
- Cooling water outlet temperature is 160°F.
- Heat exchanger inlet and outlet piping have the same diameter.

What is the approximate volumetric flow rate of the cooling water exiting the heat exchanger?

A. 496 gpm

B. 500 gpm

C. 504 gpm

D. 509 gpm

ANSWER: D.

TOPIC: 193006
KNOWLEDGE: K1.12 [2.5/2.6]
QID: P3783 (B3733)

A condensate pump is taking suction on a main condenser hotwell, containing water at 100°F, and discharging the water at a volumetric flow rate of 100,000 gpm to the main feedwater system. The main feedwater system heats the water to 400°F before it enters the steam generators. Assume there is no leakage, and no bypass or recirculation flow paths are in use.

What is the approximate volumetric flow rate of the feedwater entering the steam generators?

A. 100,000 gpm

B. 105,000 gpm

C. 109,000 gpm

D. 115,000 gpm

ANSWER: D.

TOPIC: 193006
KNOWLEDGE: K1.15 [3.1/3.3]
QID: P147

Operating two pumps in parallel instead of operating a single pump will result in a...

A. large increase in pump head and a small increase in pump flow rate.

B. small increase in pump head and a small increase in pump flow rate.

C. small increase in pump head and a large increase in pump flow rate.

D. large increase in pump head and a large increase in pump flow rate.

ANSWER: C.

TOPIC: 193006
KNOWLEDGE: K1.15 [3.1/3.3]
QID: P280

The major effect of starting a second centrifugal pump in parallel with an operating centrifugal pump in an open system is increased...

A. system pressure.

B. system flow rate.

C. pump discharge pressure.

D. pump flow rate.

ANSWER: B.

TOPIC: 193006
KNOWLEDGE: K1.15 [3.1/3.3]
QID: P282

To decrease the flow rate through an operating positive displacement pump, an operator should...

A. throttle the pump discharge valve partially closed.

B. throttle the pump suction valve partially closed.

C. decrease the pump's available net positive suction head.

D. decrease the pump's speed.

ANSWER: D.

TOPIC: 193006
KNOWLEDGE: K1.15 [3.1/3.3]
QID: P981

Which one of the following will decrease the head loss occurring in an operating cooling water system?

A. Starting a second pump in parallel with the operating pump.

B. Shifting two heat exchangers from parallel to series operation.

C. Replacing a 10 foot section of 10-inch diameter pipe with a 20 foot section of 10-inch diameter pipe.

D. Replacing a 20 foot section of 10-inch diameter pipe with a 20 foot section of 12-inch diameter pipe.

ANSWER: D.

TOPIC: 193006
KNOWLEDGE: K1.15 [3.1/3.3]
QID: P1282

Two centrifugal pumps and two positive displacement pumps are able to be cross-connected to provide makeup water flow to a system. Each pump will produce 100 gpm at a system pressure of 1,000 psig.

If system pressure is 1,200 psig, which one of the following combinations will produce the greatest flow rate to the system?

A. Two positive displacement pumps in series

B. Two positive displacement pumps in parallel

C. Two centrifugal pumps in series

D. Two centrifugal pumps in parallel

ANSWER: B.

TOPIC: 193006
KNOWLEDGE: K1.15 [3.1/3.3]
QID: P1683

Two centrifugal pumps and two positive displacement pumps are able to be cross-connected to provide makeup water flow to a system. Each pump will produce 100 gpm at a system pressure of 1,000 psig backpressure.

If system pressure is 800 psig, which one of the following combinations will produce the greatest flow rate to the system?

A. Two centrifugal pumps in parallel.

B. Two centrifugal pumps in series.

C. Two positive displacement pumps in parallel.

D. Two positive displacement pumps in series.

ANSWER: A.

TOPIC: 193006
KNOWLEDGE: K1.15 [3.1/3.3]
QID: P1784 (B1725)

Two identical centrifugal pumps (CPs) and two identical positive displacement pumps (PDPs) are able to take suction on a vented water storage tank and provide makeup water flow to a cooling water system. The pumps are capable of being cross-connected to provide multiple configurations. In single pump alignment, each pump will supply 100 gpm at a system pressure of 1,000 psig.

Given the following information:

Centrifugal Pumps

Shutoff head = 1,500 psig
Maximum design pressure = 2,000 psig
Flow rate with no backpressure = 180 gpm

Positive Displacement Pumps

Maximum design pressure = 2,000 psig

Which one of the following pump configurations will supply the lowest makeup water flow rate to the system if system pressure is 1,700 psig?

A. Two CPs in series

B. Two CPs in parallel

C. One PDP and one CP in series (CP supplying PDP)

D. One PDP and one CP in parallel

ANSWER: B.

TOPIC: 193006
KNOWLEDGE: K1.15 [3.1/3.3]
QID: P1979

Two identical centrifugal pumps (CPs) and two identical positive displacement pumps (PDPs) are able to take suction on a vented water storage tank and provide makeup water flow to a cooling water system. The pumps are capable of being cross-connected to provide multiple configurations. In single pump alignment, each pump will supply 100 gpm at a system pressure of 1,000 psig.

Given the following information:

Centrifugal Pumps

Shutoff head	=	1,500 psig
Maximum design pressure	=	2,000 psig
Flow rate with no backpressure	=	180 gpm

Positive Displacement Pumps

Maximum design pressure	=	2,000 psig

Which one of the following pump configurations will supply the highest makeup flow rate to the system if system pressure is 800 psig?

A. One PDP and one CP in series (CP supplying PDP)

B. One PDP and one CP in parallel

C. Two CPs in series

D. Two CPs in parallel

ANSWER: D.

TOPIC: 193006
KNOWLEDGE: K1.15 [3.1/3.3]
QID: P2282 (B2281)

Water at 90°F and 50 psig is flowing through a 10-inch diameter pipe at 100 lbm/sec. The pipe then splits into two pipes, a 4-inch diameter pipe and an 8-inch diameter pipe.

Disregarding any flow restrictions other than pipe size, which one of the following lists the approximate flow rates through the 4-inch and 8-inch diameter pipes? (Assume that water velocity is the same in each pipe.)

	4-inch Pipe (lbm/sec)	8-inch Pipe (lbm/sec)
A.	20	80
B.	25	75
C.	30	70
D.	33	67

ANSWER: A.

TOPIC: 193006
KNOWLEDGE: K1.15 [3.1/3.3]
QID: P2383 (B2324)

Two identical centrifugal pumps (CPs) and two identical positive displacement pumps (PDPs) are able to take suction on a vented water storage tank and provide makeup water flow to a cooling water system. The pumps are capable of being cross-connected to provide multiple configurations. In single pump alignment, each pump will supply 100 gpm at a system pressure of 1,200 psig.

Given the following information:

Centrifugal Pumps

Shutoff head = 1,500 psig
Maximum design pressure = 2,000 psig
Flow rate with no backpressure = 180 gpm

Positive Displacement Pumps

Maximum design pressure = 2,000 psig

Which one of the following pump configurations will supply the highest makeup flow rate to the system if system pressure is 500 psig?

A. Two CPs in series

B. Two CPs in parallel

C. Two PDPs in parallel

D. One CP and one PDP in series (CP supplying PDP)

ANSWER: B.

TOPIC: 193006
KNOWLEDGE: K1.15 [3.1/3.3]
QID: P2481 (B2479)

Water at 90°F and 50 psig is flowing through a 10-inch diameter pipe at 100 lbm/sec. The pipe then splits into two pipes, a 3-inch diameter pipe and a 6-inch diameter pipe.

Disregarding any flow restrictions other than pipe size, which one of the following lists the approximate flow rates through the 3-inch and 6-inch diameter pipes. (Assume that water velocity is the same in each pipe.)

	3-inch Pipe (lbm/sec)	6-inch Pipe (lbm/sec)
A.	10	90
B.	20	80
C.	25	75
D.	33	67

ANSWER: B.

TOPIC: 193006
KNOWLEDGE: K1.15 [3.1/3.3]
QID: P2582 (B2581)

Water at 90°F and 50 psig is flowing through a 10-inch diameter pipe at 100 lbm/sec. The pipe then splits into two pipes, a 6-inch diameter pipe and an 8-inch diameter pipe.

Disregarding any flow restrictions other than pipe size, which one of the following lists the approximate flow rates through the 6-inch and 8-inch diameter pipes? (Assume that water velocity is the same in each pipe.)

	6-inch Pipe (lbm/sec)	8-inch Pipe (lbm/sec)
A.	24	76
B.	32	68
C.	36	64
D.	40	60

ANSWER: C.

TOPIC: 193006
KNOWLEDGE: K1.15 [3.1/3.3]
QID: P2783 (B2723)

Two identical centrifugal pumps (CPs) and two identical positive displacement pumps (PDPs) are able to take suction on a vented water storage tank and provide makeup water flow to a cooling water system. The pumps are capable of being cross-connected to provide multiple configurations. In single pump alignment, each pump will supply 100 gpm at a system pressure of 1,200 psig.

Given the following information:

Centrifugal Pumps

Shutoff head = 1,500 psig
Maximum design pressure = 2,000 psig
Flow rate with no backpressure = 180 gpm

Positive Displacement Pumps

Maximum design pressure = 2,000 psig

Which one of the following pump configurations will supply the highest makeup flow rate to the cooling water system if system pressure is 1,700 psig?

A. Two CPs in series

B. Two CPs in parallel

C. Two PDPs in parallel

D. One CP and one PDP in series (CP supplying PDP)

ANSWER: C.

TOPIC: 193006
KNOWLEDGE: K1.15 [3.1/3.3]
QID: P3183

A four-loop PWR nuclear power plant uses four identical reactor coolant pumps (RCPs) to supply reactor coolant flow through the reactor vessel. The plant is currently operating at 20 percent power with all RCPs in operation.

Which one of the following describes the stable RCS flow rate through the reactor vessel following the trip of one RCP? (Assume that no operator actions are taken and the reactor does not trip.)

A. Less than 75 percent of the original flow rate.

B. Exactly 75 percent of the original flow rate.

C. Greater than 75 percent of the original flow rate.

D. Unpredictable without pump curves for the RCPs.

ANSWER: C.

TOPIC: 193006
KNOWLEDGE: K1.15 [3.1/3.3]
QID: P3582

A reactor shutdown has been performed because of leakage from the reactor coolant system (RCS) to a steam generator (SG) via a tube leak.

Given the following current conditions:

- SG pressure is 1,000 psia.
- RCS pressure is 2,200 psia.
- RCS average temperature is 500°F.
- Leak rate from the RCS to the SG is 100 gpm.

If RCS pressure is decreased to 1,600 psia, with no other changes in plant parameters, what will be the approximate leak rate from the RCS to the SG?

A. 50 gpm

B. 71 gpm

C. 79 gpm

D. 85 gpm

ANSWER: B.

TOPIC: 193006
KNOWLEDGE: K1.15 [3.1/3.3]
QID: P3683 (B3681)

Two identical single-speed centrifugal pumps (CPs) and two identical single-speed positive displacement pumps (PDPs) are able to take suction on a vented water storage tank and provide makeup water flow to a cooling water system. The pumps are capable of being cross-connected to provide multiple configurations. In single pump alignment, each pump will supply 100 gpm at a system pressure of 1,200 psig.

Given the following information:

Centrifugal Pumps

Discharge pressure at shutoff head = 1,500 psig
Maximum design pressure = 2,000 psig
Flow rate with no backpressure = 180 gpm

Positive Displacement Pumps

Maximum design pressure = 2,000 psig

Which one of the following pump configurations will supply the highest initial flow rate to a cooling water system that is drained and depressurized?

A. Two CPs in series

B. Two CPs in parallel

C. Two PDPs in parallel

D. One CP and one PDP in series (CP supplying PDP)

ANSWER: B.

TOPIC: 193006
KNOWLEDGE: K1.15 [3.1/3.3]
QID: P4243 (B4242)

Refer to the drawing of a venturi in a main steam line (see figure below). The venturi inlet and outlet pipe diameters are equal.

A main steam line break downstream of the venturi causes the main steam mass flow rate through the venturi to increase. Soon, the steam reaches sonic velocity in the throat of the venturi.

How will the main steam mass flow rate through the venturi be affected as the steam pressure downstream of the venturi continues to decrease?

A. It will continue to increase at a rate that is dependent on the steam velocity in the throat of the venturi.

B. It will continue to increase at a rate that is dependent on the differential pressure (P1 - P2) across the venturi.

C. It will <u>not</u> continue to increase because the steam velocity <u>cannot</u> increase above sonic velocity in the throat of the venturi.

D. It will <u>not</u> continue to increase because the differential pressure (P1 - P2) across the venturi <u>cannot</u> increase further once the steam reaches sonic velocity in the throat of the venturi.

ANSWER: C.

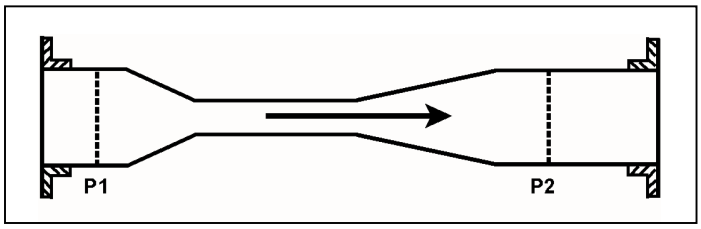

TOPIC: 193006
KNOWLEDGE: K1.15 [3.1/3.3]
QID: P4343 (B4342)

Two identical single-speed centrifugal pumps (CPs) and two identical single-speed positive displacement pumps (PDPs) are able to take suction on a vented water storage tank and provide makeup water flow to a cooling water system. The pumps are capable of being cross-connected to provide multiple configurations. In single pump alignment, each pump will supply 100 gpm at a system pressure of 1,200 psig.

Given the following information:

Centrifugal Pumps

Discharge pressure at shutoff head = 1,500 psig
Maximum design pressure = 2,000 psig
Flow rate with no backpressure = 180 gpm

Positive Displacement Pumps

Maximum design pressure = 2,000 psig

Which one of the following pump configurations will supply the lowest initial flow rate of makeup water to a cooling water system that is drained and depressurized?

A. Two CPs in series

B. Two CPs in parallel

C. Two PDPs in parallel

D. One CP and one PDP in series (CP supplying PDP)

ANSWER: D.

TOPIC: 193006
KNOWLEDGE: K1.15 [3.1/3.3]
QID: P4543 (B4542)

Refer to the drawing of a main water header that splits into two parallel headers (see figure below).

Header A has a 2-inch diameter and header B has a 3-inch diameter. The velocity of the water in both headers is the same.

If the main water header has a flow rate of 500 gpm, what is the approximate flow rate in each of the parallel headers?

	Header A (gpm)	Header B (gpm)
A.	125	375
B.	154	346
C.	200	300
D.	222	278

ANSWER: B.

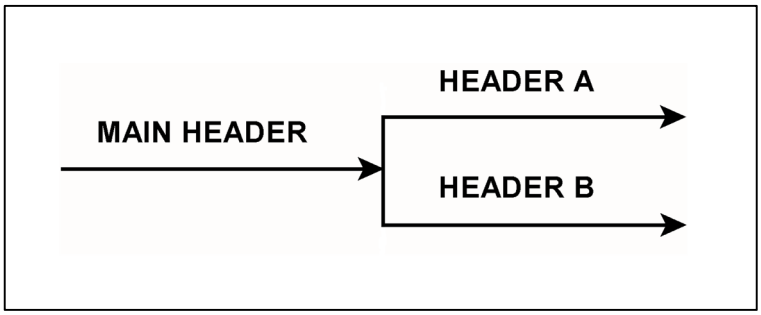

TOPIC: 193006
KNOWLEDGE: K1.15 [3.1/3.3]
QID: P4643 (B4642)

A length of pipe in a cooling water system uses a reducer fitting to decrease the pipe diameter from 6 inches to 4 inches. The flow rate in the 6-inch diameter section of pipe is 200 gpm. What is the flow rate in the 4-inch diameter section of pipe?

A. 133 gpm

B. 200 gpm

C. 300 gpm

D. 450 gpm

ANSWER: B.

TOPIC: 193006
KNOWLEDGE: K1.15 [3.1/3.3]
QID: P4743

A four-loop PWR nuclear power plant uses four identical single-speed reactor coolant pumps (RCPs) to supply reactor coolant flow through the reactor vessel. The plant is currently shut down with one RCP in operation.

Which one of the following describes the stable reactor coolant flow rate through the reactor vessel following the start of a second RCP?

A. Less than twice the original flow rate.

B. Exactly twice the original flow rate.

C. More than twice the original flow rate.

D. Cannot be determined without additional information.

ANSWER: A.

TOPIC: 193006
KNOWLEDGE: K1.15 [3.1/3.3]
QID: P5543 (B5542)

A vented water storage tank contains 60 feet of water at 70°F. A cracked weld at the bottom of the tank results in a leak rate of 12 gpm. If makeup water flow rate is 5 gpm, at what water level will the tank stabilize?

A. 38.7 feet

B. 25.0 feet

C. 10.4 feet

D. 0.0 feet

ANSWER: C.

TOPIC: 193006
KNOWLEDGE: K1.15 [3.1/3.3]
QID: P5943 (B5942)

A vented water storage tank contains 64 feet of water at 70°F. A cracked weld at the bottom of the tank results in a leak rate of 12 gpm. At what water level will the leak rate be 3 gpm?

A. 48 feet

B. 32 feet

C. 16 feet

D. 4 feet

ANSWER: D.

TOPIC: 193006
KNOWLEDGE: K1.15 [3.1/3.3]
QID: P6143 (B6142)

A plant shutdown will be performed because of leakage from the main condenser cooling water system into the main condenser via a tube leak.

Given the following initial conditions:

- Main condenser pressure is 1.7 psia.
- Atmospheric pressure is 14.7 psia
- Main condenser cooling water pressure at the location of the tube leak is 18 psig.
- Cooling water leak rate into the main condenser is 80 gpm.

If the main condenser is brought to atmospheric pressure, with no changes to the main condenser cooling water system parameters, what will be the approximate rate of cooling water leakage into the main condenser?

A. 36 gpm

B. 52 gpm

C. 61 gpm

D. 72 gpm

ANSWER: C.

TOPIC: 193006
KNOWLEDGE: K1.15 [3.1/3.3]
QID: P6543 (B6542)

An ideal positive displacement pump is operating in an open system with the following initial parameters:

Suction pressure = 10 psig
Discharge pressure = 25 psig
Flow rate = 100 gpm

If the pump discharge pressure increases to 40 psig, the pump flow rate will...

A. remain constant.

B. decrease in direct proportion to the change in pump differential pressure.

C. decrease in direct proportion to the square of the change in pump differential pressure.

D. decrease in direct proportion to the square root of the change in pump differential pressure.

ANSWER: A.

TOPIC: 193006
KNOWLEDGE: K1.15 [3.1/3.3]
QID: P6743 (B6742)

A centrifugal pump is operating at a constant speed in a closed system with the following initial parameters:

Suction pressure = 10 psig
Discharge pressure = 25 psig
Pump flow rate = 500 gpm

If the pump discharge flow control valve is throttled such that the pump discharge pressure increases to 40 psig, the change in pump flow rate will be...

A. directly proportional to the square of the change in pump differential pressure.

B. directly proportional to the square root of the change in pump differential pressure.

C. inversely proportional to the square root of the change in pump differential pressure.

D. impossible to determine from the provided information.

ANSWER: D.

TOPIC: 193006
KNOWLEDGE: K1.15 [3.1/3.3]
QID: P6843 (B6842)

Refer to the drawing of a venturi in a steam line (see figure below). The venturi inlet and outlet pipe diameters at P1 and P2 are equal.

Currently, steam is flowing through the venturi, reaching sonic velocity in the throat of the venturi. If the steam inlet pressure (P1) remains constant while the downstream pressure (P2) decreases, the mass flow rate of the steam will _____; and the velocity of the steam at the venturi outlet will _____.

A. increase; increase

B. increase; remain the same

C. remain the same; increase

D. remain the same; remain the same

ANSWER: C.

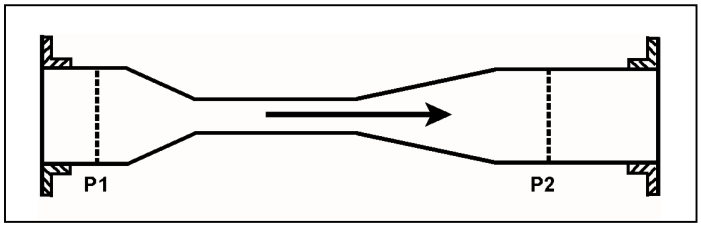

TOPIC: 193006
KNOWLEDGE: K1.15 [3.1/3.3]
QID: P7143

The following are current parameter values for an operating PWR nuclear power plant:

Steam generator (SG) pressure = 1,000 psia
Main feed pump (MFP) discharge pressure = 1,220 psia

If SG pressure does not change, what MFP discharge pressure will increase main feedwater mass flow rate by 10 percent? (Assume MFP inlet temperature remains the same. Also, assume all valves/components that contribute to head loss downstream of the MFP remain in their current configuration.)

A. 1,242 psia

B. 1,266 psia

C. 1,293 psia

D. 1,342 psia

ANSWER: B.

TOPIC: 193006
KNOWLEDGE: K1.15 [3.1/3.3]
QID: P7543 (B7542)

Which one of the following will increase the head loss occurring in an operating cooling water system?

A. Shifting two heat exchangers from parallel to series operation.

B. Increasing the flow rate in the system by throttling open a flow control valve.

C. Replacing a 20 foot section of 10-inch diameter pipe with a 10 foot section of 10-inch diameter pipe.

D. Replacing a 20 foot section of 10-inch diameter pipe with a 20 foot section of 12-inch diameter pipe.

ANSWER: A.

TOPIC: 193006
KNOWLEDGE: K1.15 [3.1/3.3]
QID: P7660 (B7660)

Which one of the following will decrease the head loss occurring in an operating cooling water system?

A. Shifting two heat exchangers from parallel to series operation.

B. Increasing the flow rate in the system by positioning a flow control valve more open.

C. Replacing a 10 foot length of 10-inch diameter pipe with a 20 foot length of 10-inch diameter pipe.

D. Replacing a 20 foot length of 12-inch diameter pipe with a 20 foot length of 10-inch diameter pipe.

ANSWER: B.

TOPIC: 193006
KNOWLEDGE: K1.15 [3.1/3.3]
QID: P7669 (B7669)

Refer to the drawing of a main water header that splits into two parallel headers (see figure below).

Header A has a 2-inch diameter and header B has a 4-inch diameter. The velocity of the water in both headers is the same.

If the main water header has a flow rate of 500 gpm, what is the approximate flow rate in each of the parallel headers?

	Header A (gpm)	Header B (gpm)
A.	100	400
B.	125	375
C.	167	333
D.	200	300

ANSWER: A.

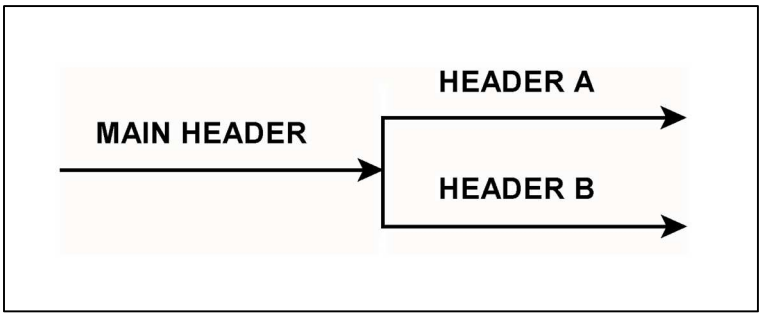

TOPIC: 193006
KNOWLEDGE: K1.15 [3.1/3.3]
QID: P7710 (B7710)

A vented water storage tank contains 30 feet of water at 70°F. A cracked weld at the bottom of the tank causes an initial leak rate of 12 gpm. If makeup water flow rate is 8 gpm, at what water level will the tank stabilize?

A. 24.5 feet

B. 20.0 feet

C. 13.3 feet

D. 0.0 feet

ANSWER: C.

TOPIC: 193007
KNOWLEDGE: K1.01 [2.5/2.5]
QID: P283

The transfer of heat from the reactor fuel pellets to the fuel cladding during normal plant operation is primarily accomplished via _____ heat transfer.

A. conduction

B. convection

C. radiant

D. two-phase

ANSWER: A.

TOPIC: 193007
KNOWLEDGE: K1.01 [2.5/2.5]
QID: P584 (B882)

Refer to the drawing of a fuel rod and coolant flow channel at the beginning of a fuel cycle (see figure below).

Which one of the following is the primary method of heat transfer through the gap between the fuel pellets and the fuel cladding?

A. Conduction

B. Convection

C. Radiation

D. Natural circulation

ANSWER: A.

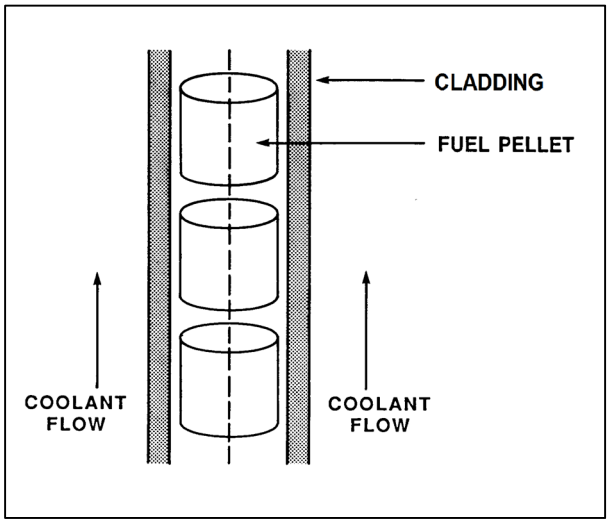

TOPIC: 193007
KNOWLEDGE: K1.01 [2.5/2.5]
QID: P784

During a loss-of-coolant accident, which one of the following heat transfer methods provides the most core cooling when fuel rods are not in contact with the coolant?

A. Radiation

B. Emission

C. Convection

D. Conduction

ANSWER: A.

TOPIC: 193007
KNOWLEDGE: K1.01 [2.5/2.5]
QID: P985 (B1982)

Reactor fuel rods are normally charged with _____ gas; which improves heat transfer by _____.

A. helium; convection

B. helium; conduction

C. nitrogen; convection

D. nitrogen; conduction

ANSWER: B.

TOPIC: 193007
KNOWLEDGE: K1.01 [2.5/2.5]
QID: P1884

A nuclear power plant is operating at 60 percent power. Which one of the following is the primary method of heat transfer from the outer surface of the steam generator tubes to the bulk feedwater?

A. Radiolysis

B. Radiation

C. Convection

D. Conduction

ANSWER: C.

TOPIC: 193007
KNOWLEDGE: K1.01 [2.5/2.5]
QID: P2284

Which one of the following describes a heat transfer process in which convection is the most significant mode of heat transfer?

A. From the fuel rods to the core barrel during core uncovery.

B. Through the tube walls in a steam generator during normal operation at 100 percent power.

C. From the fuel rods to the steam generators 24 hours after a trip of all reactor coolant pumps.

D. From the fuel pellet centerline to the fuel cladding during normal operation at 100 percent power.

ANSWER: C.

TOPIC: 193007
KNOWLEDGE: K1.01 [2.5/2.5]
QID: P2884 (B2882)

Which one of the following describes a heat transfer flow path in which conduction is the dominant mode of heat transfer?

A. From the fuel rods to the core barrel during core uncovery.

B. From the main turbine exhaust steam to the atmosphere via main condenser cooling water and a cooling tower during normal operation.

C. From the fuel rods to the steam outlet of the steam generators during a station blackout.

D. From a fuel pellet to the fuel cladding via the fuel rod fill gas during normal operation.

ANSWER: D.

TOPIC: 193007
KNOWLEDGE: K1.04 [2.8/3.0]
QID: P83

If excessive amounts of air are entrained/dissolved in the cooling water passing through a heat exchanger, the overall heat transfer coefficient of the heat exchanger will decrease because the...

A. laminar layer thickness will decrease.

B. laminar layer thickness will increase.

C. thermal conductivity of the cooling fluid will decrease.

D. thermal conductivity of the cooling fluid will increase.

ANSWER: C.

TOPIC: 193007
KNOWLEDGE: K1.04 [2.8/3.0]
QID: P1184 (B1882)

Why is bulk boiling in the tubes of a single-phase heat exchanger undesirable?

A. The bubble formation will break up the laminar layer in the heat exchanger tubes.

B. The thermal conductivity of the heat exchanger tubes will decrease.

C. The differential temperature across the tubes will decrease through the heat exchanger.

D. The turbulence will restrict fluid flow through the heat exchanger tubes.

ANSWER: D.

TOPIC: 193007
KNOWLEDGE: K1.04 [2.8/3.0]
QID: P2184 (B2184)

Which one of the following pairs of fluids undergoing heat transfer in similar cross-flow heat exchangers will yield the greatest heat exchanger overall heat transfer coefficient? (Assume comparable heat exchanger sizes and fluid flow rates.)

A. Oil to water in a lube oil cooler.

B. Air to water in an air compressor after-cooler.

C. Steam to water in a turbine exhaust steam condenser.

D. Water to water in a cooling water heat exchanger.

ANSWER: C.

TOPIC: 193007
KNOWLEDGE: K1.04 [2.8/3.0]
QID: P2384 (B2383)

Which one of the following pairs of fluids undergoing heat transfer in similar cross-flow design heat exchangers will yield the smallest heat exchanger overall heat transfer coefficient? (Assume comparable heat exchanger sizes and fluid flow rates.)

A. Oil to water in a lube oil cooler.

B. Air to water in an air compressor after-cooler.

C. Steam to water in a turbine exhaust steam condenser.

D. Water to water in a cooling water heat exchanger.

ANSWER: B.

TOPIC: 193007
KNOWLEDGE: K1.04 [2.8/3.0]
QID: P3084 (B3084)

A nuclear power plant is operating near 100 percent power. Main turbine extraction steam is being supplied to a feedwater heater. Extraction steam parameters are as follows:

Steam pressure = 414 psia
Steam flow rate = 7.5×10^5 lbm/hr
Steam enthalpy = 1,150 Btu/lbm

The extraction steam condenses to saturated water at 414 psia, and then leaves the feedwater heater via a drain line.

What is the heat transfer rate from the extraction steam to the feedwater in the feedwater heater?

A. 3.8×10^7 Btu/hr

B. 8.6×10^7 Btu/hr

C. 5.4×10^8 Btu/hr

D. 7.2×10^8 Btu/hr

ANSWER: C.

TOPIC: 193007
KNOWLEDGE: K1.04 [2.8/3.0]
QID: P3384 (B3383)

A nuclear power plant is initially operating at a steady-state power level with the following main condenser parameters:

Main condenser pressure = 1.2 psia
Cooling water inlet temperature = 60°F
Cooling water outlet temperature = 84°F

Due to increased condenser air inleakage, the overall heat transfer coefficient of the main condenser decreases by 25 percent. Main condenser heat transfer rate and cooling water temperatures are unchanged. Which one of the following is the steady-state main condenser pressure resulting from the reduced heat transfer coefficient?

A. 1.7 psia

B. 2.3 psia

C. 3.0 psia

D. 4.6 psia

ANSWER: A.

TOPIC: 193007
KNOWLEDGE: K1.04 [2.8/3.0]
QID: P3684 (B3684)

Which one of the following pairs of fluids undergoing heat transfer in similar cross-flow design heat exchangers will yield the greatest heat exchanger overall heat transfer coefficient? (Assume comparable heat exchanger sizes and fluid flow rates.)

A. Oil to water in a lube oil cooler.

B. Steam to water in a feedwater heater.

C. Water to air in a ventilation cooling unit.

D. Water to water in a cooling water heat exchanger.

ANSWER: B.

TOPIC: 193007
KNOWLEDGE: K1.04 [2.8/3.0]
QID: P5144 (B5143)

A nuclear power plant is operating near 100 percent power. Main turbine extraction steam is being supplied to a feedwater heater. Extraction steam parameters are as follows:

Steam pressure = 500 psia
Steam flow rate = 7.0×10^5 lbm/hr
Steam enthalpy = 1,135 Btu/lbm

The extraction steam condenses to saturated water at 500 psia, and then leaves the feedwater heater via a drain line.

What is the heat transfer rate from the extraction steam to the feedwater in the feedwater heater?

A. 3.2×10^8 Btu/hr

B. 4.8×10^8 Btu/hr

C. 5.3×10^8 Btu/hr

D. 7.9×10^8 Btu/hr

ANSWER: B.

TOPIC: 193007
KNOWLEDGE: K1.05 [2.7/2.9]
QID: P585

During steady state power operation, core thermal power can be most accurately determined by multiplying the total mass flow rate of the...

A. reactor coolant by the change in temperature across the core.

B. reactor coolant by the change in enthalpy in the steam generators.

C. feedwater by the change in enthalpy in the steam generators.

D. feedwater by the change in temperature across the core.

ANSWER: C.

TOPIC: 193007
KNOWLEDGE: K1.05 [2.7/2.9]
QID: P785

A reactor is producing 200 MW of core thermal power. Reactor coolant pumps are adding 10 MW of additional thermal power into the reactor coolant system based on heat balance calculations. The core is rated at 1,330 MW thermal power.

Which one of the following is the core thermal power in percent?

A. 14.0 percent

B. 14.3 percent

C. 15.0 percent

D. 15.8 percent

ANSWER: C.

TOPIC: 193007
KNOWLEDGE: K1.06 [3.1/3.3]
QID: P137

The power range nuclear instruments have been adjusted to 100 percent based on a heat balance calculation. Which one of the following would cause indicated reactor power to be greater than actual reactor power?

A. The reactor coolant pump heat input term was omitted from the heat balance calculation.

B. The feedwater flow rate used in the heat balance calculation was lower than actual feedwater flow rate.

C. The steam pressure used in the heat balance calculation was 50 psi higher than actual steam pressure.

D. The enthalpy of the feedwater was miscalculated to be 10 Btu/lbm higher than actual feedwater enthalpy.

ANSWER: A.

TOPIC: 193007
KNOWLEDGE: K1.06 [3.1/3.3]
QID: P332

Which one of the terms in the equation, $\dot{Q} = UA(T1-T2)$, is affected the most, and therefore most responsible for the initial increase in heat transfer rate from the reactor fuel during a minor (3 percent) steamline break? (Assume no initial change in reactor power.)

A. U

B. A

C. T1

D. T2

ANSWER: D.

TOPIC: 193007
KNOWLEDGE: K1.06 [3.1/3.3]
QID: P384 (B386)

The power range nuclear instruments have been adjusted to 100 percent based on a heat balance calculation. Which one of the following will result in indicated reactor power being greater than actual reactor power?

A. The feedwater temperature used in the heat balance calculation was higher than actual feedwater temperature.

B. The reactor coolant pump heat input term was omitted from the heat balance calculation.

C. The feedwater flow rate used in the heat balance calculation was lower than actual feedwater flow rate.

D. The steam pressure used in the heat balance calculation was higher than actual steam pressure.

ANSWER: B.

TOPIC: 193007
KNOWLEDGE: K1.06 [3.1/3.3]
QID: P1384

A secondary heat balance calculation is being performed at 90 percent reactor power to calibrate reactor power instrumentation. Which one of the following will result in a calculated reactor power that is less than actual reactor power?

A. Steam generator pressure is indicating 20 psi above actual steam generator pressure.

B. Steam generator water level is indicating 3 percent below actual steam generator water level.

C. Feedwater flow rate is indicating 3 percent above actual feedwater flow rate.

D. Feedwater temperature is indicating 20°F below actual feedwater temperature.

ANSWER: A.

TOPIC: 193007
KNOWLEDGE: K1.06 [3.1/3.3]
QID: P2185 (B2183)

The power range nuclear instruments have been adjusted to 100 percent based on a heat balance calculation. Which one of the following will result in indicated reactor power being lower than actual reactor power?

A. The feedwater temperature used in the heat balance calculation was 20°F higher than actual feedwater temperature.

B. The reactor coolant pump heat input term was omitted from the heat balance calculation.

C. The feedwater flow rate used in the heat balance calculation was 10 percent higher than actual feedwater flow rate.

D. The steam pressure used in the heat balance calculation was 50 psi lower than actual steam pressure.

ANSWER: A.

TOPIC: 193007
KNOWLEDGE: K1.06 [3.1/3.3]
QID: P2485 (B2684)

The power range nuclear instruments have been adjusted to 100 percent based on a heat balance calculation. Which one of the following will result in indicated reactor power being higher than actual reactor power?

A. The feedwater temperature used in the heat balance calculation was 20°F higher than actual feedwater temperature.

B. The reactor coolant pump heat input term was omitted from the heat balance calculation.

C. The feedwater flow rate used in the heat balance calculation was 10 percent lower than actual feedwater flow rate.

D. The ambient heat loss term was omitted from the heat balance calculation.

ANSWER: B.

TOPIC: 193007
KNOWLEDGE: K1.06 [3.1/3.3]
QID: P2685 (B2284)

The power range nuclear instruments have been adjusted to 100 percent based on a calculated heat balance. Which one of the following will result in indicated reactor power being lower than actual reactor power?

A. The feedwater temperature used in the heat balance calculation was 20°F higher than actual feedwater temperature.

B. The reactor coolant pump heat input value used in the heat balance was 10 percent lower than actual reactor coolant pump heat input.

C. The feedwater flow rate used in the heat balance calculation was 10 percent higher than actual feedwater flow rate.

D. The operator miscalculated the enthalpy of the steam exiting the reactor vessel to be 10 Btu/lbm higher than actual.

ANSWER: A.

TOPIC: 193007
KNOWLEDGE: K1.06 [3.1/3.3]
QID: P2885

The power range nuclear instruments have been adjusted to 100 percent based on a calculated heat balance. Which one of the following will result in indicated reactor power being lower than actual reactor power?

A. The feedwater temperature used in the heat balance calculation was 20°F lower than actual feed water temperature.

B. The reactor coolant pump heat input term was omitted from the heat balance calculation.

C. The ambient heat loss value used in the heat balance calculation was only one-half the actual ambient heat loss.

D. The feedwater flow rate used in the heat balance calculation was 10 percent higher than actual feedwater flow rate.

ANSWER: C.

TOPIC: 193007
KNOWLEDGE: K1.06 [3.1/3.3]
QID: P3944 (B1684)

The power range nuclear instruments have been adjusted to 100 percent based on a calculated heat balance. Which one of the following will result in indicated reactor power being lower than actual reactor power?

A. The feedwater temperature used in the heat balance calculation was 10°F lower than actual feedwater temperature.

B. The reactor coolant pump heat input term was omitted from the heat balance calculation.

C. The feedwater flow rate used in the heat balance calculation was 10 percent lower than actual feedwater flow rate.

D. The steam pressure used in the heat balance calculation was 50 psi lower than actual steam pressure.

ANSWER: C.

TOPIC: 193007
KNOWLEDGE: K1.06 [3.1/3.3]
QID: P5044

Two of the parameters listed below are used for calculating core thermal power using the standard heat balance method. Which one of the following identifies the two parameters?

	Reactor Coolant Mass Flow Rate	Feedwater Temperature	Steam Generator Pressure	Steam Generator Water Level
A.	Yes	No	Yes	No
B.	No	Yes	Yes	No
C.	Yes	No	No	Yes
D.	No	Yes	No	Yes

ANSWER: B.

TOPIC: 193007
KNOWLEDGE: K1.06 [3.1/3.3]
QID: P6044 (B6043)

The power range nuclear instruments have been adjusted to 100 percent based on a heat balance calculation. Which one of the following will result in indicated reactor power being higher than actual reactor power?

A. The steam pressure used in the heat balance calculation was 50 psi higher than actual steam pressure.

B. The ambient heat loss value used in the heat balance calculation was twice the actual ambient heat loss.

C. The feedwater flow rate used in the heat balance calculation was 10 percent lower than actual feedwater flow rate.

D. The feedwater temperature used in the heat balance calculation was 20°F higher than actual feedwater temperature.

ANSWER: B.

TOPIC: 193007
KNOWLEDGE: K1.06 [3.1/3.3]
QID: P6844

When performing a heat balance calculation to determine core thermal power, the measured thermal power is _____ by a value associated with the reactor coolant pumps (RCPs); the adjustment is needed because _____ of the flow energy added to the reactor coolant by the RCPs is converted to thermal energy of the reactor coolant.

A. decreased; nearly all

B. decreased; a small fraction

C. increased; nearly all

D. increased; a small fraction

ANSWER: A.

TOPIC: 193007
KNOWLEDGE: K1.08 [3.1/3.4]
QID: P84

In a two-loop PWR nuclear power plant, feedwater flow rate to each steam generator (SG) is 3.3×10^6 lbm/hr at an enthalpy of 419 Btu/lbm. The steam exiting each SG is at 800 psia with 100 percent steam quality.

Ignoring all other heat gain and loss mechanisms, what is the reactor core thermal power?

A. 677 MW

B. 755 MW

C. 1,334 MW

D. 1,510 MW

ANSWER: D.

TOPIC: 193007
KNOWLEDGE: K1.08 [3.1/3.4]
QID: P285

Reactor coolant enters a reactor core at 545°F and leaves at 595°F. The reactor coolant flow rate is 6.6×10^7 lbm/hour and the specific heat capacity of the coolant is 1.3 Btu/lbm-°F.

What is the reactor core thermal power?

A. 101 MW

B. 126 MW

C. 1,006 MW

D. 1,258 MW

ANSWER: D.

TOPIC: 193007
KNOWLEDGE: K1.08 [3.1/3.4]
QID: P485

A reactor is operating with the following parameters:

Reactor power	=	100 percent
Core ΔT	=	42°F
Reactor coolant system flow rate	=	100 percent
Average reactor coolant temperature	=	587°F

A station blackout occurs and natural circulation is established with the following stable parameters:

Decay heat rate	=	2 percent
Core ΔT	=	28°F
Average reactor coolant temperature	=	572°F

What is the core mass flow rate in percent?

A. 2.0 percent

B. 2.5 percent

C. 3.0 percent

D. 4.0 percent

ANSWER: C.

TOPIC: 193007
KNOWLEDGE: K1.08 [3.1/3.4]
QID: P685

A nuclear power plant is initially operating at 80 percent power with a core ΔT of 48°F when a station blackout occurs. Natural circulation is established and core ΔT stabilizes at 40°F. If reactor coolant mass flow rate is 3 percent, which one of the following is the current core decay heat level?

A. 1 percent

B. 2 percent

C. 3 percent

D. 4 percent

ANSWER: B.

TOPIC: 193007
KNOWLEDGE: K1.08 [3.1/3.4]
QID: P1485

During a nuclear power plant outage, 5 percent of all steam generator (SG) tubes were plugged due to wall thinning. Full power reactor coolant system flow rate and average reactor coolant temperature (T_{ave}) have <u>not</u> changed. Given the following 100 percent power conditions <u>before</u> the outage:

T_{ave} = 578°F
$T_{S/G}$ = 538°F

Which one of the following will be the approximate SG pressure <u>after</u> the outage when the plant is returned to 100 percent power? (Assume the overall heat transfer coefficients for the S/Gs did <u>not</u> change.)

A. 960 psia

B. 930 psia

C. 900 psia

D. 870 psia

ANSWER: B.

TOPIC: 193007
KNOWLEDGE: K1.08 [3.1/3.4]
QID: P1782

A nuclear power plant is operating with the following parameters:

Reactor power	=	100 percent
Core ΔT	=	60°F
Reactor coolant system flow rate	=	100 percent
Average coolant temperature	=	587°F

A station blackout occurs and natural circulation is established with the following stable parameters:

Decay heat	=	1 percent
Core ΔT	=	30°F
Average coolant temperature	=	572°F

What is the core mass flow rate in percent?

A. 2.0 percent

B. 2.5 percent

C. 3.0 percent

D. 4.0 percent

ANSWER: A.

TOPIC: 193007
KNOWLEDGE: K1.08 [3.1/3.4]
QID: P2085

During a nuclear power plant outage, 6 percent of all steam generator (SG) tubes were plugged. Full-power reactor coolant system flow rate and average reactor coolant temperature (T_{ave}) have not changed. Given the following 100 percent power conditions before the outage:

T_{ave} = 584°F
$T_{S/G}$ = 544°F

Which one of the following will be the approximate SG pressure after the outage when the plant is returned to 100 percent power?

A. 974 psia

B. 954 psia

C. 934 psia

D. 914 psia

ANSWER: A.

TOPIC: 193007
KNOWLEDGE: K1.08 [3.1/3.4]
QID: P2585

During a nuclear power plant outage, 5 percent of all steam generator (SG) tubes were plugged. Full-power reactor coolant system flow rate and average reactor coolant temperature (T_{ave}) have not changed. Given the following 100 percent power conditions before the outage:

T_{ave} = 588°F
$T_{S/G}$ = 542°F

Which one of the following will be the approximate SG pressure after the outage when the plant is returned to 100 percent power?

A. 998 psia

B. 979 psia

C. 961 psia

D. 944 psia

ANSWER: C.

TOPIC: 193007
KNOWLEDGE: K1.08 [3.1/3.4]
QID: P2985

A nuclear power plant is operating at power. Total feedwater flow rate to all steam generators is 7.0 x 10^6 lbm/hr at a temperature of 440°F. The steam exiting the steam generators is at 1,000 psia with 100 percent steam quality.

Ignoring all other heat gain and loss mechanisms, what is the reactor core thermal power?

A. 1,335 MW

B. 1,359 MW

C. 1,589 MW

D. 1,612 MW

ANSWER: C.

TOPIC: 193007
KNOWLEDGE: K1.08 [3.1/3.4]
QID: P7639

A nuclear power plant is operating with the following stable steam generator (SG) and feedwater (FW) parameters:

SG pressure	=	1,000 psia
Total SG steam flow rate	=	1.0×10^7 lbm/hr (dry, saturated steam)
Feedwater inlet temperature	=	470°F

Based on the above information, what is the thermal power output of the reactor?

A. 740 MW

B. 1,328 MW

C. 2,169 MW

D. 3,497 MW

ANSWER: C.

TOPIC: 193008
KNOWLEDGE: K1.01 [2.8/3.0]
QID: P986

Which one of the following is an example of significant radiative heat transfer?

A. Heat transfer from the fuel pellet to the fuel cladding via direct contact.

B. Heat transfer from the reactor coolant to the feedwater in a steam generator.

C. Heat transfer from the center to the edge of a fuel pellet at end of core life.

D. Heat transfer from the fuel cladding to the reactor coolant through a stable vapor layer.

ANSWER: D.

TOPIC: 193008
KNOWLEDGE: K1.01 [2.8/3.0]
QID: P1186 (B1986)

Refer to the drawing of a pool boiling curve (see figure below). In which region of the curve does the most efficient form of heat transfer occur?

A. Region I

B. Region II

C. Region III

D. Region IV

ANSWER: B.

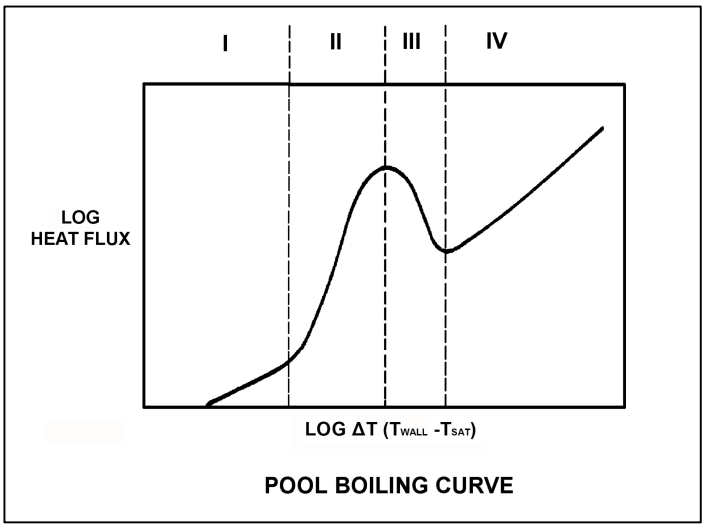

TOPIC: 193008
KNOWLEDGE: K1.01 [2.8/3.0]
QID: P1286 (B2088)

Refer to the drawing of a pool boiling curve (see figure below).

Which region of the curve contains the operating point at which the hottest locations of a reactor normally operate to transfer heat from the fuel cladding to the coolant at 100 percent power?

A. Region I

B. Region II

C. Region III

D. Region IV

ANSWER: B.

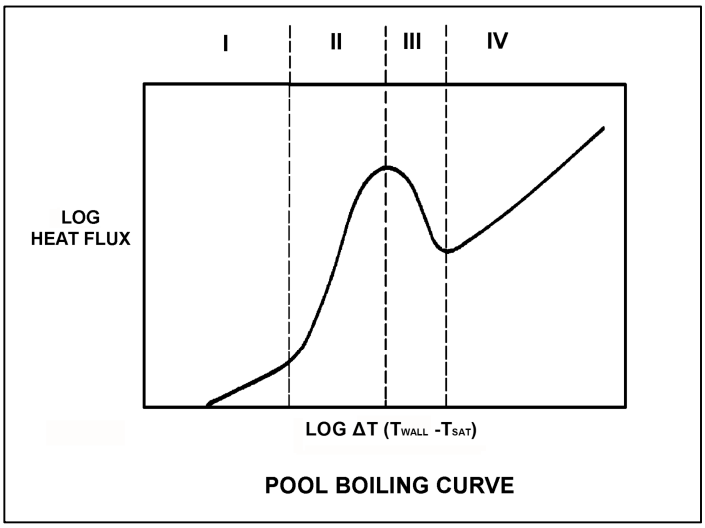

TOPIC: 193008
KNOWLEDGE: K1.02 [2.8/3.0]
QID: P85

Why does nucleate boiling improve heat transfer in a reactor core?

A. The formation of steam bubbles at nucleation sites on the fuel rod allows more heat to be transferred by conduction.

B. The formation of steam bubbles at nucleation sites on the fuel rod promotes local radiative heat transfer and allows more heat to be transferred by convection.

C. Heat is removed from the fuel rod as both sensible heat and latent heat of condensation, and the heat is transferred directly to the coolant by radiative heat transfer.

D. Heat is removed from the fuel rod as both sensible heat and latent heat of vaporization, and the motion of the steam bubbles causes rapid mixing of the coolant.

ANSWER: D.

TOPIC: 193008
KNOWLEDGE: K1.02 [2.8/3.0]
QID: P886

Convection heat transfer improves when nucleate boiling begins on the surface of a fuel rod because:

A. steam bubble formation decreases coolant flow rate along the fuel rod.

B. steam bubble formation increases coolant flow rate along the fuel rod.

C. a steam blanket begins to form along the surface of the fuel rod.

D. the motion of the steam bubbles causes rapid mixing of the coolant.

ANSWER: D.

TOPIC: 193008
KNOWLEDGE: K1.02 [2.8/3.0]
QID: P1086 (B2784)

How does the convective heat transfer coefficient vary from the bottom to the top of a fuel assembly if reactor coolant enters the fuel assembly as subcooled water and exits as superheated steam?

A. Increases continuously.

B. Increases, then decreases.

C. Decreases continuously.

D. Decreases, then increases.

ANSWER: B.

TOPIC: 193008
KNOWLEDGE: K1.02 [2.8/3.0]
QID: P1187

Nucleate boiling affects heat transfer from a fuel rod primarily by...

A. improving the conductive heat transfer from the fuel rod to the coolant.

B. improving the convective heat transfer from the fuel rod to the coolant.

C. degrading the conductive heat transfer from the fuel rod to the coolant.

D. degrading the convective heat transfer from the fuel rod to the coolant.

ANSWER: B.

TOPIC: 193008
KNOWLEDGE: K1.02 [2.8/3.0]
QID: P2386

Subcooled water enters the bottom of an operating reactor core. As the water flows upward past the fuel assemblies, steam bubbles form on the surface of a few fuel rods and are swept away.

If the coolant at the surface of the affected fuel rods had remained subcooled, average fuel temperature in the affected fuel rods would have been _____ because single-phase convection is a _____ efficient method of heat transfer than boiling.

A. higher; more

B. higher; less

C. lower; more

D. lower; less

ANSWER: B.

TOPIC: 193008
KNOWLEDGE: K1.02 [2.8/3.0]
QID: P2686 (B2486)

Case 1: Subcooled reactor coolant enters the bottom of a fuel assembly in a reactor operating at power. As the coolant flows upward through the fuel assembly, the water heats up and exits the fuel assembly still subcooled.

Case 2: Same as above except that reactor pressure is decreased such that the coolant begins to boil halfway up the fuel assembly, which results in a saturated steam-water mixture exiting the fuel assembly.

Assume that departure from nucleate boiling is avoided in both cases and that power level does not change. As compared to Case 1, the average fuel temperature for Case 2 will be _____ because boiling is a _____ efficient method of heat transfer.

A. higher; more

B. higher; less

C. lower; more

D. lower; less

ANSWER: C.

TOPIC: 193008
KNOWLEDGE: K1.02 [2.8/3.0]
QID: P2986 (B2986)

Subcooled reactor coolant enters the bottom of a fuel assembly and exits the top of the fuel assembly as a saturated steam-water mixture. How does the convective heat transfer coefficient change as the coolant travels upward through the fuel assembly?

A. Increases only

B. Increases, then decreases

C. Decreases only

D. Decreases, then increases

ANSWER: A.

TOPIC: 193008
KNOWLEDGE: K1.02 [2.8/3.0]
QID: P3786 (B3785)

Subcooled water enters a fuel assembly in a reactor operating at power. As the water flows upward through the fuel assembly, the water begins to boil and exits the fuel assembly as a saturated steam-water mixture.

If fuel assembly power is unchanged and system pressure is increased such that all of the water remains subcooled, the average fuel temperature in the fuel assembly would be _____ because boiling is a _____ efficient method of heat transfer.

A. higher; more

B. higher; less

C. lower; more

D. lower; less

ANSWER: A.

TOPIC: 193008
KNOWLEDGE: K1.02 [2.8/3.0]
QID: P5745 (B5744)

Initially, subcooled water is flowing into a fuel assembly with subcooled water exiting the fuel assembly several degrees hotter than when it entered. No boiling is occurring in the fuel assembly. Assume that fuel assembly thermal power and water flow rate remain the same.

System pressure is decreased, causing some of the water in contact with the fuel rods to boil during transit through the fuel assembly, but the water exiting the fuel assembly remains subcooled. Compared to the initial conditions, the average fuel temperature in the fuel assembly will be _____; and the temperature of the water exiting the fuel assembly will be _____.

A. higher; the same

B. higher; higher

C. lower; the same

D. lower; higher

ANSWER: D.

TOPIC: 193008
KNOWLEDGE: K1.03 [2.8/3.1]
QID: P86

Subcooled nucleate boiling is occurring along a heated surface. If the heat flux is increased slightly, what will be the effect on the differential temperature (ΔT) between the heated surface and the fluid? (Assume subcooled nucleate boiling is still occurring.)

A. Small increase in ΔT because of steam blanketing.

B. Large increase in ΔT because of steam blanketing.

C. Small increase in ΔT as vapor bubbles form and collapse.

D. Large increase in ΔT causing radiative heat transfer to become significant.

ANSWER: C.

TOPIC: 193008
KNOWLEDGE: K1.03 [2.8/3.1]
QID: P286 (B389)

Which one of the following characteristics will enhance steam bubble formation in water adjacent to a heated surface?

A. Chemicals dissolved in the water.

B. The absence of ionizing radiation exposure to the water.

C. A highly polished heat transfer surface with minimal scratches or cavities.

D. The presence of gases dissolved in the water.

ANSWER: D.

TOPIC: 193008
KNOWLEDGE: K1.03 [2.8/3.1]
QID: P387 (B388)

What type of boiling is described as follows?

The bulk temperature of the liquid is below saturation, but the temperature of the heat transfer surface is above saturation. Vapor bubbles form at the heat transfer surface, but condense in the bulk liquid so that no net generation of vapor is obtained.

A. Bulk boiling

B. Subcooled nucleate boiling

C. Transition boiling

D. Partial film boiling

ANSWER: B.

TOPIC: 193008
KNOWLEDGE: K1.03 [2.8/3.1]
QID: P1686 (B1087)

Which one of the following is a characteristic of subcooled nucleate boiling but not saturated nucleate boiling?

A. $T_{Cladding}$ equals T_{Sat}

B. $T_{Cladding}$ is greater than T_{Sat}

C. $T_{Bulk\ Coolant}$ equals T_{Sat}

D. $T_{Bulk\ Coolant}$ is less than T_{Sat}

ANSWER: D.

TOPIC: 193008
KNOWLEDGE: K1.03 [2.8/3.1]
QID: P1888 (B1786)

Which one of the following is a characteristic of saturated nucleate boiling but not subcooled nucleate boiling?

A. $T_{Cladding}$ equals T_{Sat}

B. $T_{Cladding}$ is greater than T_{Sat}

C. $T_{Bulk\ Coolant}$ equals T_{Sat}

D. $T_{Bulk\ Coolant}$ is less than T_{Sat}

ANSWER: C.

TOPIC: 193008
KNOWLEDGE: K1.03 [2.8/3.1]
QID: P2287 (B1086)

Which one of the following describes a reason for the increased heat transfer rate that occurs when nucleate boiling begins on the surface of a fuel rod?

A. Steam bubbles have a greater thermal conductivity than water.

B. The formation of steam bubbles increases coolant flow along the fuel rod.

C. Radiative heat transfer begins to supplement convective heat transfer.

D. The motion of the steam bubbles causes rapid mixing of the coolant.

ANSWER: D.

TOPIC: 193008
KNOWLEDGE: K1.03 [2.8/3.1]
QID: P2687 (B1287)

Which one of the following modes of heat transfer is characterized by steam bubbles moving away from a heated surface and collapsing in the bulk fluid?

A. Bulk boiling

B. Subcooled nucleate boiling

C. Saturated nucleate boiling

D. Saturated natural convection

ANSWER: B.

TOPIC: 193008
KNOWLEDGE: K1.03 [2.8/3.1]
QID: P2787 (B1285)

Which one of the following characteristics will enhance steam bubble formation in the coolant adjacent to a fuel rod?

A. Surface scratches or cavities in the fuel cladding.

B. Subsurface void defect in the fuel cladding.

C. Increased coolant velocity past the fuel rod.

D. Chemically inert material dissolved in the coolant.

ANSWER: A.

TOPIC: 193008
KNOWLEDGE: K1.03 [2.8/3.1]
QID: P3686 (B3685)

A nuclear power plant is currently shut down after several months of operation at 100 percent power. The shutdown cooling system is in operation, maintaining an average reactor coolant temperature of 280°F. A pressure control malfunction causes reactor coolant pressure to slowly and continuously decrease from 100 psia while reactor coolant temperature remains constant.

Which one of the following describes the location where nucleate boiling will first occur?

A. At a scratch on the surface of a fuel rod near the top of a fuel assembly.

B. At a scratch on the surface of a fuel rod near the bottom of a fuel assembly.

C. In the bulk fluid of a coolant channel near the top of a fuel assembly.

D. In the bulk fluid of a coolant channel near the bottom of a fuel assembly.

ANSWER: A.

TOPIC: 193008
KNOWLEDGE: K1.04 [3.1/3.3]
QID: P93

If departure from nucleate boiling occurs on the surface of a fuel rod, the surface temperature of the fuel rod will...

A. increase rapidly.

B. decrease rapidly.

C. increase gradually.

D. decrease gradually.

ANSWER: A.

TOPIC: 193008
KNOWLEDGE: K1.04 [3.1/3.3]
QID: P287 (B2987)

Which one of the following describes the heat transfer from a fuel rod experiencing departure from nucleate boiling? (ΔT refers to the difference between the fuel rod surface temperature and the coolant saturation temperature.)

A. Steam bubbles begin to blanket the fuel rod surface, causing a rapid increase in the ΔT for a given heat flux.

B. Steam bubbles completely blanket the fuel rod surface, causing a rapid decrease in the ΔT for a given heat flux.

C. Steam bubbles begin to form on the fuel rod surface, causing a rapid increase in the heat flux from the fuel rod for a given ΔT.

D. Steam bubbles completely blanket the fuel rod surface, causing a rapid increase in the heat flux from the fuel rod for a given ΔT.

ANSWER: A.

TOPIC: 193008
KNOWLEDGE: K1.04 [3.1/3.3]
QID: P1288 (B1985)

Departure from nucleate boiling should <u>not</u> be allowed to occur in the core because...

A. as steam bubbles begin to blanket the fuel rod, the radiative heat transfer decreases.

B. as steam bubbles in the coolant form and then collapse, water hammer occurs.

C. as steam bubbles begin to blanket the fuel rod, its temperature rises sharply.

D. as steam bubbles form in the coolant, voids-induced reactivity changes cause undesirable power changes.

ANSWER: C.

TOPIC: 193008
KNOWLEDGE: K1.04 [3.1/3.3]
QID: P3388 (B1288)

Which one of the following is indicated by a rapid increase in the temperature difference between the fuel cladding and the bulk coolant?

A. Bulk boiling is occurring.

B. Nucleate boiling is occurring.

C. Critical heat flux is increasing.

D. Departure from nucleate boiling is occurring.

ANSWER: D.

TOPIC: 193008
KNOWLEDGE: K1.05 [3.4/3.6]
QID: P138

Which one of the following reactor coolant system parameters has the <u>least</u> effect on margin to departure from nucleate boiling?

A. Pressurizer level

B. Local power density

C. Cold leg temperature

D. Coolant flow rate

ANSWER: A.

TOPIC: 193008
KNOWLEDGE: K1.05 [3.4/3.6]
QID: P144

An adequate subcooling margin during a loss of coolant accident is the most direct indication that _____ is being maintained.

A. steam generator water level

B. pressure level

C. core cooling

D. subcriticality

ANSWER: C.

TOPIC: 193008
KNOWLEDGE: K1.05 [3.4/3.6]
QID: P288

Which one of the following parameter changes will reduce the departure from nucleate boiling ratio?

A. Decreasing reactor power.

B. Increasing pressurizer pressure.

C. Increasing reactor coolant flow rate.

D. Increasing reactor coolant temperature.

ANSWER: D.

TOPIC: 193008
KNOWLEDGE: K1.05 [3.4/3.6]
QID: P1093

Which one of the following will increase the departure from nucleate boiling ratio?

A. Increasing reactor coolant temperature.

B. Increasing pressurizer pressure.

C. Increasing core bypass flow.

D. Increasing reactor power.

ANSWER: B.

TOPIC: 193008
KNOWLEDGE: K1.05 [3.4/3.6]
QID: P1787

A nuclear power plant is operating with the following initial conditions:

- Reactor power is 45 percent in the middle of a fuel cycle.
- Axial and radial power distributions are peaked in the center of the core.

Assuming reactor power level does <u>not</u> change, which one of the following will increase the steady-state departure from nucleate boiling ratio?

A. One reactor coolant pump trips with automatic rod control.

B. A spray valve malfunction decreases reactor coolant system pressure by 20 psig with <u>no</u> control rod motion.

C. The operator decreases reactor coolant boron concentration by 5 ppm with <u>no</u> control rod motion.

D. Core xenon-135 builds up in proportion to the axial and radial power distribution with automatic rod control.

ANSWER: D.

TOPIC: 193008
KNOWLEDGE: K1.05 [3.4/3.6]
QID: P1889

A nuclear power plant is operating with the following initial conditions:

- Reactor power is 45 percent in the middle of a fuel cycle.
- Axial and radial power distributions are peaked in the center of the core.

Which one of the following will decrease the steady-state departure from nucleate boiling ratio?

A. A reactor trip occurs and one control rod remains fully withdrawn from the core.

B. A pressurizer malfunction increases reactor coolant system pressure by 20 psig with no control rod motion.

C. The operator decreases reactor coolant boron concentration by 5 ppm with no control rod motion.

D. Core xenon-135 builds up in proportion to the axial and radial power distribution with automatic rod control.

ANSWER: C.

TOPIC: 193008
KNOWLEDGE: K1.05 [3.4/3.6]
QID: P2288

A nuclear power plant is operating with the following initial conditions:

- Reactor power is 55 percent in the middle of a fuel cycle.
- Axial and radial power distributions are peaked in the center of the core.

Which one of the following will decrease the steady-state departure from nucleate boiling ratio?

A. A reactor trip occurs and one control rod remains fully withdrawn from the core.

B. A pressurizer malfunction increases reactor coolant system pressure by 20 psig.

C. The operator increases reactor coolant boron concentration by 5 ppm with no control rod motion.

D. Core xenon-135 depletes in proportion to the axial and radial power distribution with no control rod motion.

ANSWER: D.

TOPIC: 193008
KNOWLEDGE: K1.05 [3.4/3.6]
QID: P2387

A nuclear power plant is operating with the following initial conditions:

- Reactor power is 45 percent in the middle of a fuel cycle.
- Axial and radial power distributions are peaked in the center of the core.

Which one of the following will decrease the steady-state departure from nucleate boiling ratio?

A. A reactor trip occurs and one control rod remains fully withdrawn from the core.

B. A pressurizer malfunction decreases reactor coolant system pressure by 20 psig with no control rod motion.

C. The operator increases reactor coolant boron concentration by 5 ppm with no control rod motion.

D. Core xenon-135 builds up in proportion to the axial and radial power distribution with automatic rod control.

ANSWER: B.

TOPIC: 193008
KNOWLEDGE: K1.05 [3.4/3.6]
QID: P2487

A reactor is shutdown with all control rods inserted. The reactor coolant system (RCS) is at normal operating temperature and pressure. Which one of the following will decrease the departure from nucleate boiling ratio for the reactor? (Assume the reactor remains shutdown.)

A. Fully withdrawing a bank of shutdown rods.

B. Diluting RCS boron concentration by 50 ppm.

C. Reducing RCS flow rate by one percent.

D. Increasing RCS pressure by 10 psig.

ANSWER: C.

TOPIC: 193008
KNOWLEDGE: K1.05 [3.4/3.6]
QID: P2587

A nuclear power plant is operating with the following initial conditions:

- Reactor power is 55 percent in the middle of a fuel cycle.
- Axial and radial power distributions are peaked in the center of the core.

Which one of the following will increase the steady-state departure from nucleate boiling ratio?

A. A reactor trip occurs and one control rod remains fully withdrawn from the core.

B. A pressurizer malfunction decreases reactor coolant system pressure by 20 psig.

C. The operator decreases reactor coolant boron concentration by 5 ppm with no rod motion.

D. Core xenon-135 depletes in proportion to the axial and radial power distribution with no rod motion.

ANSWER: A.

TOPIC: 193008
KNOWLEDGE: K1.05 [3.4/3.6]
QID: P2788

A nuclear power plant is operating with the following initial conditions:

- Reactor power is 45 percent in the middle of a fuel cycle.
- Axial and radial power distributions are peaked in the center of the core.

Which one of the following will increase the steady-state departure from nucleate boiling ratio?

A. Core xenon-135 decays with no change in the axial and radial power distributions.

B. A reactor trip occurs and one control rod remains fully withdrawn from the core.

C. The operator decreases reactor coolant boron concentration by 5 ppm with no control rod motion.

D. A pressurizer malfunction decreases reactor coolant system pressure by 20 psig with no control rod motion.

ANSWER: B.

TOPIC: 193008
KNOWLEDGE: K1.05 [3.4/3.6]
QID: P2989

A reactor is shut down at normal operating temperature and pressure with all control rods inserted. Which one of the following will decrease the departure from nucleate boiling ratio for this reactor? (Assume the reactor remains shutdown.)

A. Fully withdrawing a bank of shutdown rods.

B. Diluting reactor coolant boron concentration by 50 ppm.

C. Reducing reactor coolant temperature by 5°F.

D. Decreasing reactor coolant pressure by 10 psig.

ANSWER: D.

TOPIC: 193008
KNOWLEDGE: K1.06 [2.8/2.9]
QID: P87

Which one of the following parameter changes would move a reactor farther away from the critical heat flux?

A. Decrease pressurizer pressure.

B. Decrease reactor coolant flow.

C. Decrease reactor power.

D. Increase reactor coolant temperature.

ANSWER: C.

TOPIC: 193008
KNOWLEDGE: K1.06 [2.8/2.9]
QID: P145

How does the critical heat flux vary from the bottom to the top of a typical fuel assembly during normal 100 percent power operation?

A. Increases continuously.

B. Increases, then decreases.

C. Decreases continuously.

D. Decreases, then increases.

ANSWER: C.

TOPIC: 193008
KNOWLEDGE: K1.06 [2.8/2.9]
QID: P587

The heat flux that causes departure from nucleate boiling is the...

A. critical heat flux.

B. nucleate heat flux.

C. transition heat flux.

D. departure heat flux.

ANSWER: A.

TOPIC: 193008
KNOWLEDGE: K1.06 [2.8/2.9]
QID: P989

The critical heat flux is the heat transfer rate per unit _____ of fuel rod that will initially cause _____.

A. volume; nucleate boiling

B. area; nucleate boiling

C. volume; departure from nucleate boiling

D. area; departure from nucleate boiling

ANSWER: D.

TOPIC: 193008
KNOWLEDGE: K1.06 [2.8/2.9]
QID: P1087

How does critical heat flux (CHF) vary with core height during normal full power operation?

A. CHF increases from the bottom to the top of the core.

B. CHF decreases from the bottom to the core midplane, then increases from the midplane to the top of the core.

C. CHF decreases from the bottom to the top of the core.

D. CHF increases from the bottom to the core midplane, then decreases from the midplane to the top of the core.

ANSWER: C.

TOPIC: 193008
KNOWLEDGE: K1.06 [2.8/2.9]
QID: P1586

A reactor is operating at steady-state 75 percent power. Which one of the following parameter changes will cause the core to operate closer to the critical heat flux? (Assume reactor power does not change unless stated.)

A. Decrease reactor coolant flow rate by 5 percent.

B. Decrease reactor power by 10 percent.

C. Decrease reactor coolant temperature by 3°F.

D. Increase pressurizer pressure by 20 psia.

ANSWER: A.

TOPIC: 193008
KNOWLEDGE: K1.06 [2.8/2.9]
QID: P3587

Which one of the following is most likely to result in fuel cladding damage?

A. Operating at 110 percent of reactor vessel design pressure.

B. An inadvertent reactor trip from 100 percent power.

C. Operating at a power level that exceeds the critical heat flux.

D. Operating with saturated nucleate boiling occurring in a fuel assembly.

ANSWER: C.

TOPIC: 193008
KNOWLEDGE: K1.07 [2.6/2.6]
QID: P689

A small increase in differential temperature at the fuel cladding-to-coolant interface causes increased steam blanketing and a reduction in heat flux. This describes which type of boiling?

A. Subcooled boiling

B. Nucleate boiling

C. Partial film boiling

D. Total film boiling

ANSWER: C.

TOPIC: 193008
KNOWLEDGE: K1.07 [2.6/2.6]
QID: P1089

Refer to the drawing of a pool boiling curve (see figure below).

Choose the region of the curve where transition boiling is the primary heat transfer process.

A. Region I

B. Region II

C. Region III

D. Region IV

ANSWER: C.

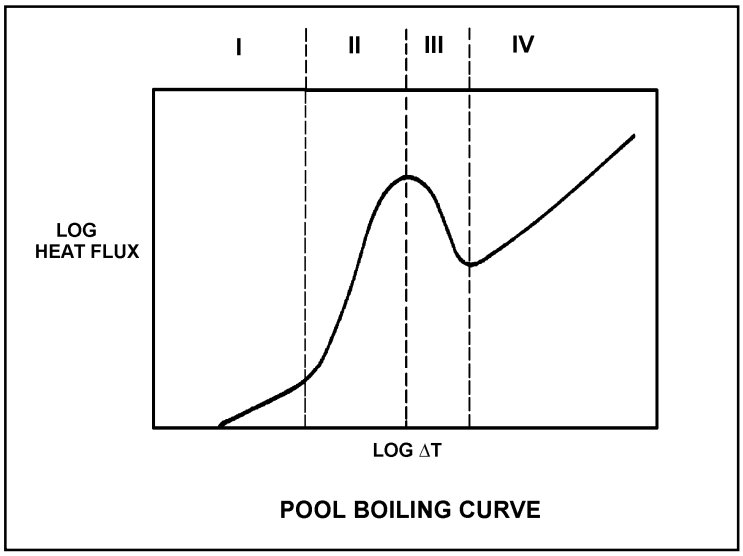

TOPIC: 193008
KNOWLEDGE: K1.07 [2.6/2.6]
QID: P1689 (B1386)

Refer to the drawing of a pool boiling curve (see figure below).

Which one of the points shown marks the onset of transition boiling?

A. A

B. B

C. C

D. D

ANSWER: B.

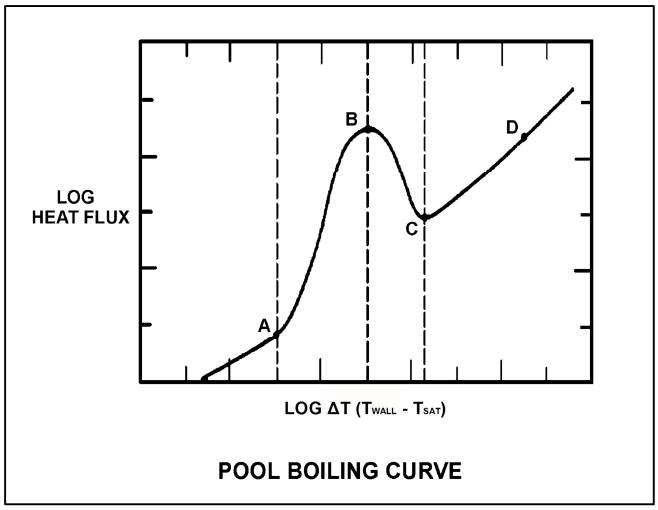

TOPIC: 193008
KNOWLEDGE: K1.07 [2.6/2.6]
QID: P1891 (B987)

Which one of the following describes the heat transfer conditions in a fuel assembly that is experiencing transition boiling?

A. Complete steam blanketing of the fuel rod surface.

B. Alternate wetting and drying of the fuel rod surface.

C. Saturated nucleate boiling.

D. Subcooled nucleate boiling.

ANSWER: B.

TOPIC: 193008
KNOWLEDGE: K1.07 [2.6/2.6]
QID: P1987 (B2288)

Which one of the following describes the conditions in a fuel assembly that is experiencing transition boiling?

A. Complete steam blanketing of the fuel rod surface.

B. Alternate wetting and drying of the fuel rod surface.

C. Steam bubbles form and collapse on the fuel rod surface.

D. Steam bubbles form on the fuel rod surface and are swept away by subcooled bulk coolant.

ANSWER: B.

TOPIC: 193008
KNOWLEDGE: K1.07 [2.6/2.6]
QID: P2188 (B2185)

Refer to the drawing of a pool boiling curve (see figure below).

Which one of the following describes the heat transfer conditions in a fuel assembly that is experiencing region III heat transfer?

A. Complete steam blanketing of the fuel rod surface.

B. Alternate wetting and drying of the fuel rod surface.

C. Saturated nucleate boiling.

D. Subcooled nucleate boiling.

ANSWER: B.

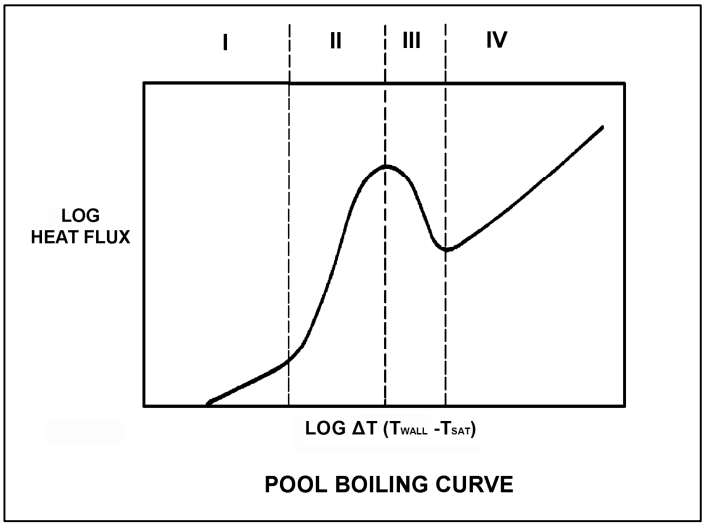

TOPIC: 193008
KNOWLEDGE: K1.07 [2.6/2.6]
QID: P2289 (B289)

Refer to the drawing of a pool-boiling curve (see figure below).

With heat flux continuously increasing, the point at which the critical heat flux is reached (point B), marks the beginning of...

A. nucleate boiling.

B. stable film boiling.

C. partial film boiling.

D. single-phase convection.

ANSWER: C.

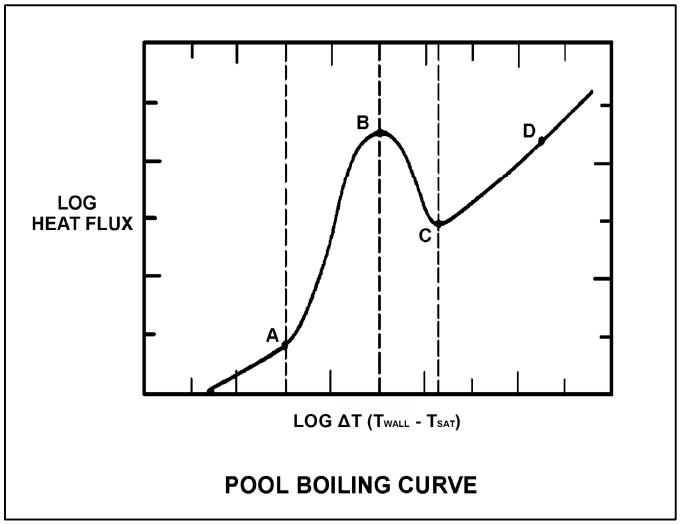

TOPIC: 193008
KNOWLEDGE: K1.07 [2.6/2.6]
QID: P2688 (B1486)

Refer to the drawing of a pool boiling curve (see figure below).

Which one of the following regions represents the most unstable mode of heat transfer?

A. Region I

B. Region II

C. Region III

D. Region IV

ANSWER: C.

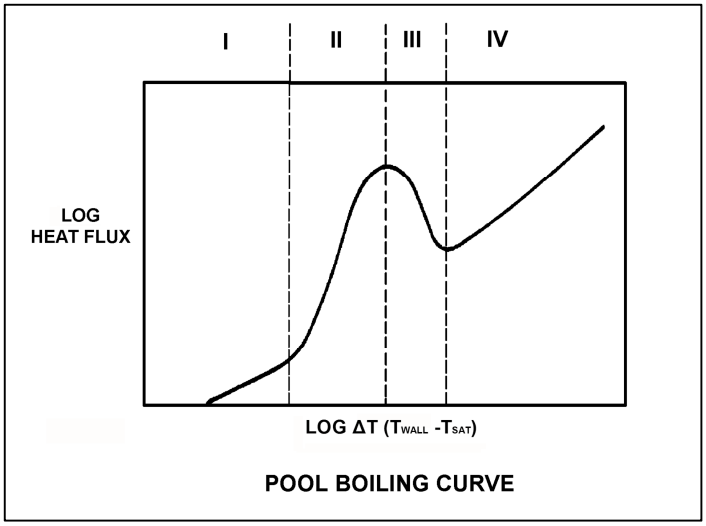

TOPIC: 193008
KNOWLEDGE: K1.08 [2.6/2.6]
QID: P88

Film boiling heat transfer is...

A. the most efficient method of boiling heat transfer.

B. heat transfer through an oxide film on the cladding.

C. heat transfer being accomplished with no enthalpy change.

D. heat transfer through a vapor blanket that covers the fuel cladding.

ANSWER: D.

TOPIC: 193008
KNOWLEDGE: K1.08 [2.6/2.6]
QID: P139

Reactor power is increased sufficiently to cause steam blanketing of several fuel rods. This condition is being caused by...

A. departure from nucleate boiling.

B. subcooled nucleate boiling.

C. saturated nucleate boiling.

D. onset of nucleate boiling.

ANSWER: A.

TOPIC: 193008
KNOWLEDGE: K1.08 [2.6/2.6]
QID: P889 (B1987)

If the fission rate in a reactor core steadily increases, the mode of heat transfer that occurs immediately after the critical heat flux is reached is called...

A. transition boiling.

B. subcooled nucleate boiling.

C. saturated nucleate boiling.

D. stable film boiling.

ANSWER: A.

TOPIC: 193008
KNOWLEDGE: K1.08 [2.6/2.6]
QID: P1587 (B1587)

Refer to the drawing of a pool boiling curve (see figure below).

Which one of the points shown marks the smallest ΔT at which stable film boiling can exist?

A. A

B. B

C. C

D. D

ANSWER: C.

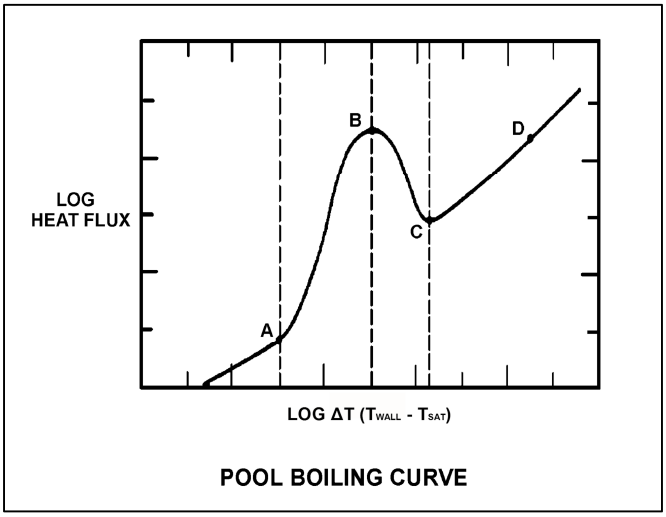

TOPIC: 193008
KNOWLEDGE: K1.08 [2.6/2.6]
QID: P2588 (B2588)

Refer to the drawing of a pool boiling curve (see figure below).

Which one of the following describes the conditions in a fuel assembly that is experiencing region IV heat transfer?

A. Complete steam blanketing of the fuel rod surface.

B. Alternate wetting and drying of the fuel rod surface.

C. Saturated nucleate boiling.

D. Subcooled nucleate boiling.

ANSWER: A.

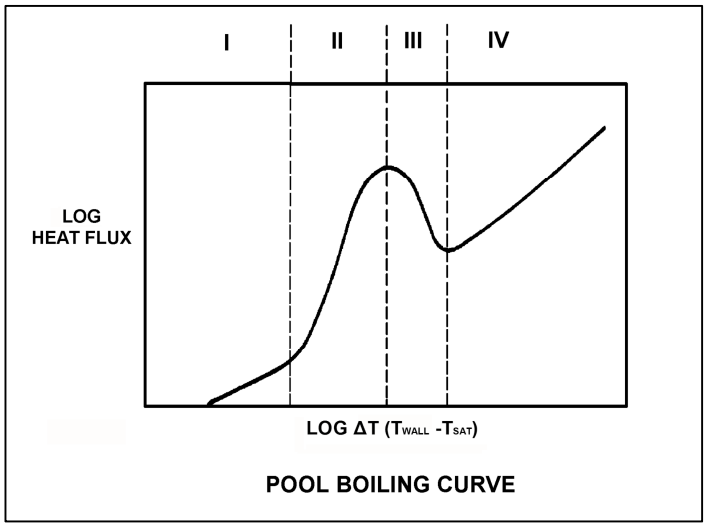

TOPIC: 193008
KNOWLEDGE: K1.08 [2.6/2.6]
QID: P3488 (B3485)

During a loss of coolant accident, some fuel rods may experience stable film boiling. Which one of the following types of heat transfer from the fuel cladding will increase significantly when stable film boiling begins?

A. Forced convection

B. Natural convection

C. Conduction

D. Radiation

ANSWER: D.

TOPIC: 193008
KNOWLEDGE: K1.10 [2.9/3.1]
QID: P89

The departure from nucleate boiling (DNB) ratio is defined as the...

A. actual heat flux divided by the critical heat flux.

B. critical heat flux divided by the actual heat flux.

C. actual core thermal power divided by the rated core thermal power.

D. rated core thermal power divided by the actual core thermal power.

ANSWER: B.

TOPIC: 193008
KNOWLEDGE: K1.10 [2.9/3.1]
QID: P289

In the definition of departure from nucleate boiling ratio, the term "actual heat flux" refers to the...

A. heat transfer rate per unit area at any point along the fuel rod.

B. average heat transfer rate per unit area across the core.

C. integrated heat transfer rate along the entire fuel rod.

D. total heat transfer rate along the entire fuel rod.

ANSWER: A.

TOPIC: 193008
KNOWLEDGE: K1.10 [2.9/3.1]
QID: P1190

A reactor is operating at steady-state 100 percent power near the end of a fuel cycle with all control rods fully withdrawn. At what axial location in a typical fuel assembly will the <u>maximum</u> departure from nucleate boiling ratio occur?

A. At the top of the fuel assembly.

B. At the bottom of the fuel assembly.

C. Between the bottom and midplane of the fuel assembly.

D. Between the midplane and the top of the fuel assembly.

ANSWER: B.

TOPIC: 193008
KNOWLEDGE: K1.10 [2.9/3.1]
QID: P2590

If a reactor is operating with the departure from nucleate boiling ratio at its limit, which one of the following is indicated?

A. None of the fuel rods are experiencing critical heat flux.

B. A small fraction of the fuel rods may be experiencing critical heat flux.

C. All radioactive fission products are being contained within the reactor fuel.

D. All radioactive fission products are being contained within either the reactor fuel or the reactor vessel.

ANSWER: B.

TOPIC: 193008
KNOWLEDGE: K1.14 [2.6/2.7]
QID: P389 (B588)

Core heat transfer rate is <u>maximized</u> by the presence of...

A. laminar flow with no nucleate boiling.

B. turbulent flow with no nucleate boiling.

C. laminar flow with nucleate boiling.

D. turbulent flow with nucleate boiling.

ANSWER: D.

TOPIC: 193008
KNOWLEDGE: K1.14 [2.6/2.7]
QID: P690

The heat transfer coefficient for the core will be directly increased if: (Assume bulk coolant subcooling.)

A. the coolant temperature is decreased.

B. the coolant flow rate is decreased.

C. nucleate boiling occurs in the coolant.

D. the coolant flow is laminar instead of turbulent.

ANSWER: C.

TOPIC: 193008
KNOWLEDGE: K1.14 [2.6/2.7]
QID: P891

Increasing coolant flow rate through a reactor core improves heat transfer from the fuel because a higher coolant flow rate _____ the laminar film thickness and _____ the temperature of the coolant adjacent to the fuel.

A. increases; raises

B. increases; lowers

C. decreases; raises

D. decreases; lowers

ANSWER: D.

TOPIC: 193008
KNOWLEDGE: K1.14 [2.6/2.7]
QID: P1691

Which one of the following will minimize core heat transfer?

A. Laminar flow with no nucleate boiling.

B. Turbulent flow with no nucleate boiling.

C. Laminar flow with nucleate boiling.

D. Turbulent flow with nucleate boiling.

ANSWER: A.

TOPIC: 193008
KNOWLEDGE: K1.15 [3.6/3.8]
QID: P90

A nuclear power plant is operating at 100 percent power. The reactor coolant subcooling margin will be <u>directly</u> reduced by…

A. increasing reactor coolant temperature.

B. increasing pressurizer pressure.

C. increasing reactor coolant flow rate.

D. increasing pressurizer level.

ANSWER: A.

TOPIC: 193008
KNOWLEDGE: K1.15 [3.6/3.8]
QID: P290

The difference between the actual temperature and the saturation temperature of a liquid is the...

A. critical heat flux.

B. saturation margin.

C. subcooling margin.

D. departure from nucleate boiling ratio.

ANSWER: C.

TOPIC: 193008
KNOWLEDGE: K1.15 [3.6/3.8]
QID: P393

Which one of the following must be present to assure adequate core cooling following a small loss of coolant accident?

A. Subcooling margin greater than zero.

B. Pressurizer level in the indicating range.

C. Emergency cooling injection flow greater than zero.

D. Pressurizer pressure greater than the safety injection actuation setpoint.

ANSWER: A.

TOPIC: 193008
KNOWLEDGE: K1.15 [3.6/3.8]
QID: P992

Which one of the following will increase the reactor coolant system (RCS) subcooling margin with the reactor operating at full power?

A. Decreased RCS pressure.

B. Decreased RCS hot leg temperature.

C. Increased RCS cold leg temperature.

D. Increased concentration of soluble gases in the RCS.

ANSWER: B.

TOPIC: 193008
KNOWLEDGE: K1.15 [3.6/3.8]
QID: P1491

A 60°F/hour reactor coolant system (RCS) cooldown and depressurization with natural circulation is in progress. After one hour, RCS subcooling will be minimum in the...

A. reactor core.

B. RCS loop hot leg.

C. RCS loop cold leg.

D. reactor vessel head.

ANSWER: D.

TOPIC: 193008
KNOWLEDGE: K1.15 [3.6/3.8]
QID: P2090

A reactor coolant system (RCS) cooldown and depressurization is in progress on natural circulation following a loss of offsite power. The following conditions currently exist:

RCS T_{cold} = 520°F, decreasing
RCS T_{hot} = 538°F, decreasing
Pressurizer pressure = 2,000 psia, decreasing

If the cooldown rate is being maintained at 50°F/hr, which one of the following locations is most likely to experience sustained steam voiding?

A. Reactor vessel head

B. RCS loop hot leg

C. Steam generator U-tubes

D. Reactor core

ANSWER: A.

TOPIC: 193008
KNOWLEDGE: K1.15 [3.6/3.8]
QID: P2591

Which one of the following is most likely to result in steam bubble formation in the reactor vessel head while maintaining a 60°F subcooling margin in the hottest reactor coolant system (RCS) hot leg?

A. Performing a 25°F/hr RCS cooldown with natural circulation.

B. Performing a 50°F/hr RCS cooldown with natural circulation.

C. Performing a 25°F/hr RCS heatup with forced circulation.

D. Performing a 50°F/hr RCS heatup with forced circulation.

ANSWER: B.

TOPIC: 193008
KNOWLEDGE: K1.15 [3.6/3.8]
QID: P2790

Which one of the following is most likely to result in steam bubble formation in a reactor vessel head while maintaining a 40°F subcooling margin in the hottest RCS hot leg?

A. Performing a 25°F/hr RCS cooldown with natural circulation.

B. Performing a 25°F/hr RCS cooldown with forced circulation.

C. Performing a 50°F/hr RCS cooldown with natural circulation.

D. Performing a 50°F/hr RCS cooldown with forced circulation.

ANSWER: C.

TOPIC: 193008
KNOWLEDGE: K1.15 [3.6/3.8]
QID: P2890

A nuclear power plant maintains the reactor coolant system (RCS) cold leg temperature (T_{cold}) at 557°F from 0 percent to 100 percent power. At 100 percent power, the reactor differential temperature (T_{hot} - T_{cold}) is 60°F.

If this plant also maintains RCS pressure constant at 2,235 psig, which one of the following is the approximate RCS subcooling margin at 50 percent power?

A. 30°F

B. 36°F

C. 66°F

D. 96°F

ANSWER: C.

TOPIC: 193008
KNOWLEDGE: K1.15 [3.6/3.8]
QID: P2991

Assume that a 30°F subcooling margin is maintained in the reactor coolant system (RCS) hot legs during each of the following shutdown reactor cooldown operations. Which one of the following will maintain the greatest subcooling margin in the reactor vessel head?

A. Performing a 25°F/hr RCS cooldown with natural circulation using one steam generator.

B. Performing a 25°F/hr RCS cooldown with all reactor coolant pumps running.

C. Performing a 100°F/hr RCS cooldown with natural circulation using all steam generators.

D. Performing a 100°F/hr RCS cooldown with one reactor coolant pump running.

ANSWER: B.

TOPIC: 193008
KNOWLEDGE: K1.16 [2.4/2.6]
QID: P391 (B1989)

Refer to the drawing of a fuel rod and adjacent coolant flow channel (see figure below).

With a nuclear power plant operating at steady-state 100 percent reactor power at the beginning of a fuel cycle, which one of the following has the greater temperature difference?

A. Fuel pellet centerline-to-pellet surface

B. Fuel pellet surface-to-cladding gap

C. Zircaloy cladding

D. Coolant laminar layer

ANSWER: A.

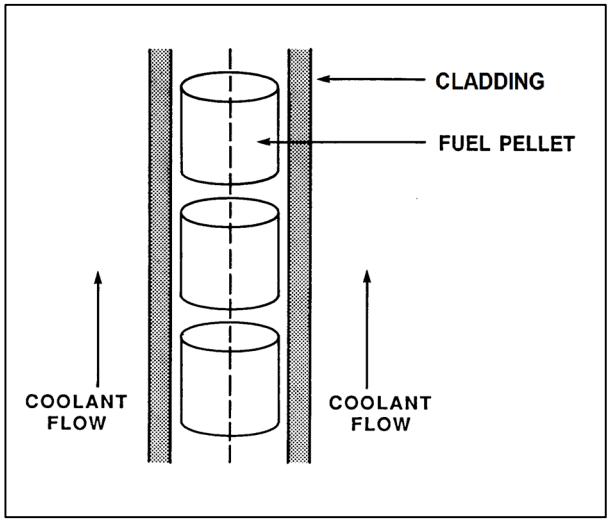

TOPIC: 193008
KNOWLEDGE: K1.17 [2.9/3.2]
QID: P692

During a plant cooldown and depressurization with forced circulation, reactor coolant system (RCS) loop flow indications and reactor coolant pump (RCP) motor current indications become erratic. These abnormal indications are most likely caused by...

A. RCP cavitation.

B. RCP runout.

C. RCS loop water hammer.

D. RCS hot leg saturation.

ANSWER: A.

TOPIC: 193008
KNOWLEDGE: K1.18 [2.3/2.5]
QID: P1790 (B1789)

Single-phase coolant flow resistance in a reactor core is directly proportional to the square of coolant _____; and inversely proportional to _____.

A. velocity; fuel assembly length

B. temperature; fuel assembly length

C. velocity; coolant channel cross-sectional area

D. temperature; coolant channel cross-sectional area

ANSWER: C.

TOPIC: 193008
KNOWLEDGE: K1.18 [2.3/2.5]
QID: P5446 (B5445)

Refer to the drawing of a section of pipe that contains flowing subcooled water (see figure below).

Given:

- Pressure at P_1 is 24 psig.
- Pressure at P_2 is 16 psig.
- Pressure change due to change in velocity is 2 psig.
- Pressure change due to change in elevation is 10 psig.

The pressure decrease due to friction head loss between P_1 and P_2 is _____; and the direction of flow is from _____.

A. 2 psig; left to right

B. 2 psig; right to left

C. 4 psig; left to right

D. 4 psig; right to left

ANSWER: D.

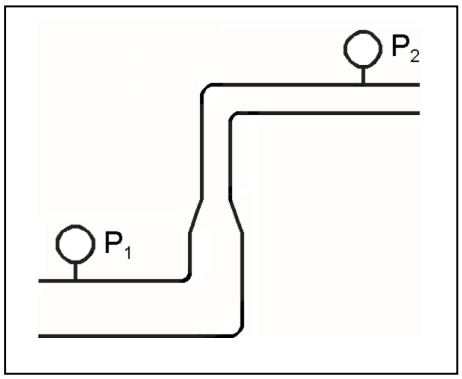

TOPIC: 193008
KNOWLEDGE: K1.18 [2.3/2.5]
QID: P5847 (B5845)

Refer to the drawing of a section of pipe that contains flowing subcooled water (see figure below).

Given:

- Pressure at P_1 is 26 psig.
- Pressure at P_2 is 34 psig.
- Pressure change due to change in velocity is 2 psig.
- Pressure change due to change in elevation is 8 psig.

The pressure decrease due to friction head loss between P_1 and P_2 is _____; and the direction of flow is from _____.

A. 2 psig; left to right

B. 2 psig; right to left

C. 4 psig; left to right

D. 4 psig; right to left

ANSWER: A.

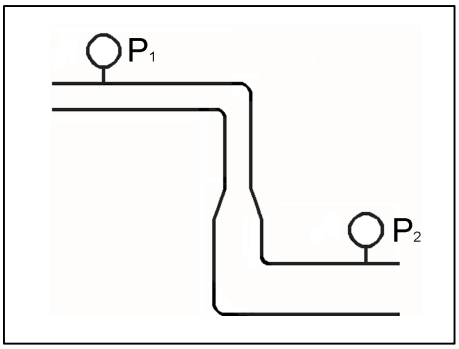

TOPIC: 193008
KNOWLEDGE: K1.18 [2.3/2.5]
QID: P6648 (B6646)

Refer to the drawing of a section of pipe that contains flowing subcooled water. (See figure below).

Given:

- Pressure at P_1 is 30 psig.
- Pressure at P_2 is 32 psig.
- Pressure change due to change in velocity is 2 psig.
- Pressure change due to change in elevation is 2 psig.

The pressure decrease due to friction head loss between P_1 and P_2 is _____; and the direction of flow is from _____.

A. 2 psig; left to right

B. 2 psig; right to left

C. 6 psig; left to right

D. 6 psig; right to left

ANSWER: B.

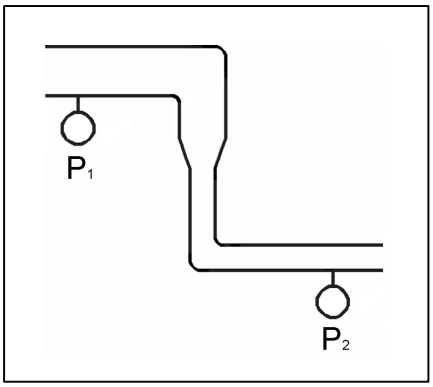

TOPIC: 193008
KNOWLEDGE: K1.18 [2.3/2.5]
QID: P7048 (B7046)

Refer to the drawing of a section of pipe that contains flowing subcooled water (see figure below).

Given:

- Pressure at P_1 is 34 psig.
- Pressure at P_2 is 20 psig.
- Pressure change due to change in velocity is 2 psig.
- Pressure change due to change in elevation is 8 psig.

The pressure decrease due to friction head loss between P_1 and P_2 is _____; and the direction of flow is from _____.

A. 2 psig; left to right

B. 2 psig; right to left

C. 4 psig; left to right

D. 4 psig; right to left

ANSWER: D.

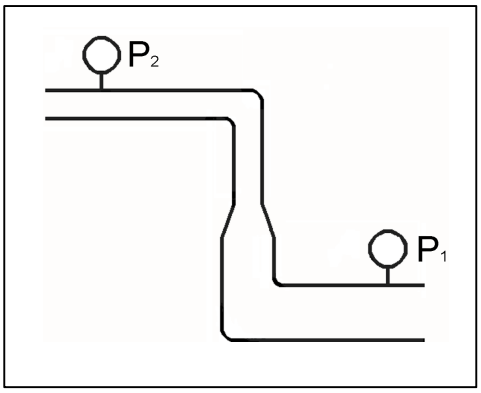

TOPIC: 193008
KNOWLEDGE: K1.18 [2.3/2.5]
QID: P7680 (B7680)

Refer to the drawing of a section of pipe that contains flowing subcooled water (see figure below).

Given:

- The pressure at P_1 is 20 psig.
- The pressure at P_2 is 20 psig.
- The pressure change caused by the change in velocity is 2 psig.
- The pressure change caused by the change in elevation is 8 psig.

The pressure decrease due to friction head loss between P_1 and P_2 is _____; and the direction of flow is from _____.

A. 6 psig; left to right

B. 6 psig; right to left

C. 10 psig; left to right

D. 10 psig; right to left

ANSWER: B.

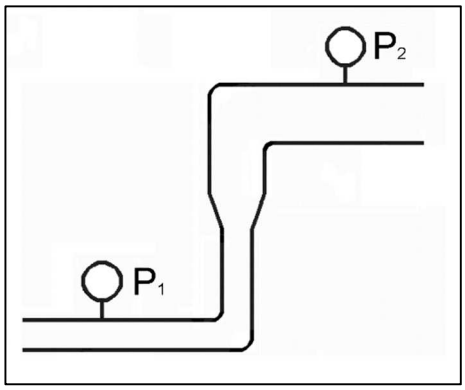

TOPIC: 193008
KNOWLEDGE: K1.19 [2.5/2.8]
QID: P1192

A reactor is producing 3,400 MW of thermal output with a reactor vessel differential temperature (ΔT) of 60°F and a reactor vessel mass flow rate of 1.4 x 10^8 lbm/hr. If core ΔT is 63.6°F, what is core bypass mass flow rate? (Assume bypass flow ΔT equals 0°F.)

A. 7.92 x 10^6 lbm/hr

B. 8.40 x 10^6 lbm/hr

C. 1.26 x 10^8 lbm/hr

D. 1.32 x 10^8 lbm/hr

ANSWER: A.

TOPIC: 193008
KNOWLEDGE: K1.19 [2.5/2.8]
QID: P1886

A reactor is producing 3,400 MW of thermal output with a reactor vessel differential temperature (ΔT) of 60°F and a reactor vessel mass flow rate of 1.0 x 10^8 lbm/hr. If core ΔT is 63.6°F, what is core bypass mass flow rate? (Assume bypass flow ΔT equals 0°F.)

A. 5.66 x 10^6 lbm/hr

B. 8.40 x 10^6 lbm/hr

C. 3.60 x 10^7 lbm/hr

D. 9.43 x 10^7 lbm/hr

ANSWER: A.

TOPIC: 193008
KNOWLEDGE: K1.19 [2.5/2.8]
QID: P2291

A reactor is producing 3,400 MW of thermal output with a reactor vessel differential temperature (ΔT) of 60°F and a reactor vessel mass flow rate of 1.1×10^8 lbm/hr. If core ΔT is 63.6°F, what is core bypass mass flow rate? (Assume bypass flow ΔT equals 0°F.)

A. 5.66×10^6 lbm/hr

B. 6.23×10^6 lbm/hr

C. 5.66×10^7 lbm/hr

D. 6.23×10^7 lbm/hr

ANSWER: B.

TOPIC: 193008
KNOWLEDGE: K1.20 [2.9/2.9]
QID: P590

Adequate core bypass flow is needed to...

A. cool the excore nuclear instrument detectors.

B. provide reactor coolant pump minimum flow requirements.

C. prevent stratification of reactor coolant inside the reactor vessel lower head.

D. equalize the temperatures between the reactor vessel and the reactor vessel upper head.

ANSWER: D.

TOPIC: 193008
KNOWLEDGE: K1.20 [2.9/2.9]
QID: P1391

Which one of the following describes a function of core bypass flow?

A. Provides a means of measuring core flow rate.

B. Prevents boron precipitation in the core baffle area.

C. Prevents excessive reactor vessel wall differential temperature.

D. Provides cooling to various reactor vessel internal components.

ANSWER: D.

TOPIC: 193008
KNOWLEDGE: K1.20 [2.9/2.9]
QID: P1488

Which one of the following is a function of core bypass flow?

A. Provides mixing of coolant in the reactor vessel head.

B. Provides even coolant flow distribution through the fuel.

C. Ensures natural circulation will be initiated when forced circulation is lost.

D. Ensures core exit thermocouple readings represent average fuel temperatures.

ANSWER: A.

TOPIC: 193008
KNOWLEDGE: K1.21 [3.9/4.2]
QID: P91

Maximizing the elevation difference between the core thermal center and the steam generator thermal center and minimizing flow restrictions in the reactor coolant system (RCS) piping are features of nuclear power plant designs that...

A. minimize the RCS volume.

B. maximize the RCS flow rate during forced circulation.

C. ensure a maximum RCS loop transit time.

D. ensure RCS natural circulation flow can be established.

ANSWER: D.

TOPIC: 193008
KNOWLEDGE: K1.21 [3.9/4.2]
QID: P292

Which one of the following must exist for natural circulation flow to occur?

A. The heat source must be larger than the heat sink.

B. The heat source must be located higher than the heat sink.

C. The heat sink must be larger than the heat source.

D. The heat sink must be located higher than the heat source.

ANSWER: D.

TOPIC: 193008
KNOWLEDGE: K1.21 [3.9/4.2]
QID: P893

The driving head for natural circulation flow through the core is developed by differences in _____ between the hot leg and the cold leg.

A. water density

B. water volume

C. pipe diameter

D. piping length

ANSWER: A.

TOPIC: 193008
KNOWLEDGE: K1.21 [3.9/4.2]
QID: P1387

If the steam generator thermal centers were at the same elevation as the reactor core thermal center, natural circulation flow in the reactor coolant system would...

A. not occur.

B. not be affected.

C. be greater than if they were at different elevations.

D. flow in the reverse direction.

ANSWER: A.

TOPIC: 193008
KNOWLEDGE: K1.21 [3.9/4.2]
QID: P1393

A reactor is shut down with natural circulation core cooling. Decay heat generation is equivalent to 1.0 percent of rated thermal power. Stable natural circulation mass flow rate is 1,000 gpm.

When decay heat generation decreases to 0.5 percent of rated thermal power, stable natural circulation flow rate will be approximately...

A. 125 gpm.

B. 250 gpm.

C. 707 gpm.

D. 794 gpm.

ANSWER: D.

TOPIC: 193008
KNOWLEDGE: K1.21 [3.9/4.2]
QID: P1692

A reactor is shut down with natural circulation core cooling. Decay heat generation is equivalent to 1.0 percent of rated thermal power. Core differential temperature (ΔT) has stabilized at 16°F.

When decay heat generation decreases to 0.5 percent of rated thermal power, core ΔT will be approximately...

A. 2°F.

B. 4°F.

C. 8°F.

D. 10°F.

ANSWER: D.

TOPIC: 193008
KNOWLEDGE: K1.21 [3.9/4.2]
QID: P1887

Sustained natural circulation requires that the heat sink is _____ in elevation than the heat source and that there is a _____ difference between the heat sink and the heat source.

A. lower; pressure

B. lower; temperature

C. higher; pressure

D. higher; temperature

ANSWER: D.

TOPIC: 193008
KNOWLEDGE: K1.21 [3.9/4.2]
QID: P1989 (B2386)

Which one of the following conditions must occur to sustain natural convection in a fluid system?

A. Subcooling of the fluid.

B. A phase change in the fluid.

C. A density change in the fluid.

D. Radiative heat transfer to the fluid.

ANSWER: C.

TOPIC: 193008
KNOWLEDGE: K1.21 [3.9/4.2]
QID: P2092

A reactor is shut down with natural circulation core cooling. Decay heat generation is equivalent to 1.0 percent of rated thermal power. Core differential temperature (ΔT) has stabilized at 16°F.

When decay heat generation decreases to 0.333 percent of rated thermal power, core ΔT will be approximately...

A. 2°F.

B. 4°F.

C. 8°F.

D. 10°F.

ANSWER: C.

TOPIC: 193008
KNOWLEDGE: K1.21 [3.9/4.2]
QID: P2392

A reactor is shut down with natural circulation core cooling. Decay heat generation is equivalent to 1.0 percent of rated thermal power. Core differential temperature (ΔT) has stabilized at 13°F.

When decay heat generation decreases to 0.5 percent of rated thermal power, core ΔT will be approximately...

A. 4°F.

B. 6°F.

C. 8°F.

D. 10°F.

ANSWER: C.

TOPIC: 193008
KNOWLEDGE: K1.21 [3.9/4.2]
QID: P2491

A reactor is shut down with natural circulation core cooling. Decay heat generation is equivalent to 1.0 percent of rated thermal power. Stable natural circulation flow rate is 800 gpm.

When decay heat generation decreases to 0.5 percent of rated thermal power, stable natural circulation flow rate will be approximately...

A. 400 gpm.

B. 565 gpm.

C. 635 gpm.

D. 696 gpm.

ANSWER: C.

TOPIC: 193008
KNOWLEDGE: K1.21 [3.9/4.2]
QID: P7447

Sustained natural circulation requires that the heat source is _____ in elevation than the heat sink; and that there is a _____ difference between the heat source and the heat sink.

A. lower; phase

B. lower; temperature

C. higher; phase

D. higher; temperature

ANSWER: B.

TOPIC: 193008
KNOWLEDGE: K1.22 [4.2/4.2]
QID: P1492

A nuclear power plant was operating at steady-state 100 percent power when a loss of offsite power occurred, resulting in a reactor trip and a loss of forced reactor coolant circulation. Thirty minutes later, reactor coolant system (RCS) hot leg temperature is greater than cold leg temperature and steam generator (SG) levels are stable.

Which one of the following combinations of parameter trends, observed 30 minutes after the trip, indicates that natural circulation is occurring? (CET = core exit thermocouple)

	RCS Hot Leg Temperature	RCS Cold Leg Temperature	SG Pressures	RCS CET Subcooling
A.	Decreasing	Stable	Stable	Increasing
B.	Increasing	Decreasing	Increasing	Decreasing
C.	Decreasing	Decreasing	Decreasing	Decreasing
D.	Increasing	Increasing	Decreasing	Increasing

ANSWER: A.

TOPIC: 193008
KNOWLEDGE: K1.22 [4.2/4.2]
QID: P1791

A nuclear power plant was operating at steady-state 100 percent power when a loss of offsite power occurred, resulting in a reactor trip and a loss of forced reactor coolant circulation. Two hours later, reactor coolant system (RCS) hot leg temperature is greater than cold leg temperature and steam generator (SG) levels are stable.

Which one of the following combinations of parameter trends, observed two hours after the trip, indicates that natural circulation is not occurring? (CET = core exit thermocouples)

	RCS Hot Leg Temperature	RCS Cold Leg Temperature	SG Pressures	RCS CET Subcooling
A.	Stable	Decreasing	Decreasing	Stable
B.	Stable	Stable	Decreasing	Decreasing
C.	Decreasing	Decreasing	Decreasing	Increasing
D.	Decreasing	Stable	Stable	Increasing

ANSWER: B.

TOPIC: 193008
KNOWLEDGE: K1.22 [4.2/4.2]
QID: P7670

A reactor had been operating at 100 percent power for 3 months when a loss of offsite power occurred, causing a reactor trip and a loss of forced reactor coolant flow. If forced reactor coolant flow is not restored, which one of the following describes the relationship between reactor coolant hot leg and cold leg temperatures one hour after the reactor trip?

A. Hot leg temperature will be greater than cold leg temperature because natural circulation cooling flow occurs in the same direction as forced reactor coolant flow.

B. Hot leg temperature will be less than cold leg temperature because natural circulation cooling flow occurs in the opposite direction as forced reactor coolant flow.

C. Hot leg temperature will be approximately the same as cold leg temperature because only the density of the reactor coolant changes during natural circulation cooling.

D. Hot leg temperature will be approximately the same as cold leg temperature because the reactor does not produce a significant amount of heat one hour after a reactor trip.

ANSWER: A.

TOPIC: 193008
KNOWLEDGE: K1.23 [3.9/4.1]
QID: P92

A reactor is shut down at normal operating temperature and pressure with all reactor coolant pumps stopped. Stable natural circulation cooling is in progress with 50°F of RCS subcooling. Which one of the following, if increased, will not affect natural circulation flow rate?

A. Reactor coolant pressure

B. Time after reactor trip

C. Feedwater flow rate

D. Steam generator pressure

ANSWER: A.

TOPIC: 193008
KNOWLEDGE: K1.23 [3.9/4.1]
QID: P293

Fully-developed natural circulation flow rate will be greatest when...

A. all reactor coolant pumps stop sequentially within 1 hour after a reactor trip.

B. all reactor coolant pumps stop at the same time as the reactor trip.

C. all reactor coolant pumps run for 1 hour after a reactor trip, and then stop.

D. only one reactor coolant pump runs for 1 hour after a reactor trip, and then stops.

ANSWER: B.

TOPIC: 193008
KNOWLEDGE: K1.23 [3.9/4.1]
QID: P392

Natural circulation flow can be enhanced by...

A. increasing the elevation of the heat source to equal that of the heat sink.

B. increasing the temperature difference between the heat source and the heat sink.

C. decreasing the temperature difference between the heat source and the heat sink.

D. decreasing the elevation difference between the heat source and the heat sink.

ANSWER: B.

TOPIC: 193008
KNOWLEDGE: K1.23 [3.9/4.1]
QID: P1493

Which one of the following will enhance natural circulation flow in the reactor coolant system?

A. Pressurizer level is decreased.

B. Steam generator level is increased.

C. Pressurizer pressure is decreased.

D. Steam generator pressure is increased.

ANSWER: B.

TOPIC: 193008
KNOWLEDGE: K1.23 [3.9/4.1]
QID: P1591

A nuclear power plant was operating at a constant power level for the last two weeks when a loss of offsite power occurred, which caused a reactor trip and a loss of forced reactor coolant flow. Natural circulation reactor coolant flow developed and stabilized 30 minutes after the trip.

Which one of the following combinations of initial reactor power and post-trip steam generator pressure will result in the highest stable natural circulation flow rate 30 minutes after the trip?

	Initial Reactor Power	Post-trip Steam Generator Pressure
A.	100 percent	1,100 psia
B.	25 percent	1,100 psia
C.	100 percent	1,000 psia
D.	25 percent	1,000 psia

ANSWER: C.

TOPIC: 193008
KNOWLEDGE: K1.23 [3.9/4.1]
QID: P1985

A nuclear power plant was operating at a constant power level for the last two weeks when a loss of offsite power occurred, which caused a reactor trip and a loss of forced reactor coolant flow. Natural circulation reactor coolant flow developed and stabilized 30 minutes after the trip.

Which one of the following combinations of initial reactor power and post-trip steam generator pressure will result in the lowest stable natural circulation flow rate 30 minutes after the trip?

	Initial Reactor Power	Post-trip Steam Generator Pressure
A.	100 percent	1,100 psia
B.	25 percent	1,100 psia
C.	100 percent	1,000 psia
D.	25 percent	1,000 psia

ANSWER: B.

TOPIC: 193008
KNOWLEDGE: K1.23 [3.9/4.1]
QID: P2492

A nuclear power plant was operating at steady-state 100 percent power when a loss of offsite power occurred, which caused a reactor trip and a complete loss of forced reactor coolant flow. Natural circulation reactor coolant flow developed and stabilized approximately 30 minutes after the trip.

Which one of the following combinations of reactor power history and post-trip steam generator pressure will result in the highest stable natural circulation flow rate?

	Days At Full Power	Post-trip Steam Generator Pressure
A.	12	1,100 psia
B.	100	1,100 psia
C.	12	1,000 psia
D.	100	1,000 psia

ANSWER: D.

TOPIC: 193008
KNOWLEDGE: K1.23 [3.9/4.1]
QID: P3292

A few minutes ago, a nuclear power plant experienced a loss of offsite power that caused a reactor trip and a loss of all reactor coolant pumps. Natural circulation flow is currently developing in the reactor coolant system (RCS).

Which one of the following operator actions will promote the development of natural circulation in the RCS?

A. Establish and maintain saturation conditions in the RCS.

B. Establish and maintain a steam bubble in the reactor vessel.

C. Establish and maintain steam generator pressure above RCS pressure.

D. Establish and maintain steam generator water level high in the normal operating range.

ANSWER: D.

TOPIC: 193008
KNOWLEDGE: K1.24 [2.7/3.1]
QID: P592

During the reflux boiling method of core cooling, steam from the reactor core is condensed in the _____ side of a steam generator and flows back into the core via the _____. (Assume the steam generators contain U-tubes.)

A. hot leg; hot leg

B. cold leg; hot leg

C. hot leg; cold leg

D. cold leg; cold leg

ANSWER: A.

TOPIC: 193008
KNOWLEDGE: K1.24 [2.7/3.1]
QID: P786

Which one of the following describes the method of core heat removal during reflux core cooling following a loss of coolant accident?

A. Convection with forced coolant flow.

B. Convection with natural circulation coolant flow.

C. Conduction with stagnant coolant flow.

D. Radiation with total core voiding.

ANSWER: B.

TOPIC: 193008
KNOWLEDGE: K1.24 [2.7/3.1]
QID: P2692

A nuclear power plant is experiencing natural circulation core cooling following a loss of coolant accident. Which one of the following, when it first occurs, marks the beginning of reflux core cooling? (Assume the steam generators contain U-tubes.)

A. Reactor core steam production results in two-phase coolant entering the hot legs and being delivered to the steam generators.

B. Hot leg steam quality is so high that the steam generators cannot fully condense it, and two-phase coolant is returned to the reactor vessel via the cold legs.

C. Steam condensation in the hot legs is unable to pass completely through the steam generators to enter the cold legs.

D. The steam generators are no longer able to condense any of the steam contained in the hot legs.

ANSWER: C.

TOPIC: 193008
KNOWLEDGE: K1.25 [3.3/3.4]
QID: P593

A reactor coolant system natural circulation cooldown is in progress with steam release from the steam generator (SG) atmospheric steam relief valves (operated in manual control). If high point voiding interrupts natural circulation, which one of the following will occur? (Assume feedwater flow rate, SG relief valve position, and core decay heat level are constant.)

A. SG level will increase and SG pressure will increase.

B. SG level will increase and SG pressure will decrease.

C. SG level will decrease and SG pressure will increase.

D. SG level will decrease and SG pressure will decrease.

ANSWER: B.

TOPIC: 193008
KNOWLEDGE: K1.25 [3.3/3.4]
QID: P793

A reactor coolant system natural circulation cooldown is in progress with steam release from the steam generator (SG) atmospheric steam relief valves (operated in manual control). Assume feedwater flow rate, SG relief valve position, and core decay heat level are constant.

If high point voiding interrupts natural circulation, SG levels will gradually _____; and core exit thermocouple indications will gradually _____.

A. decrease; increase

B. decrease; decrease

C. increase; increase

D. increase; decrease

ANSWER: C.

TOPIC: 193008
KNOWLEDGE: K1.25 [3.3/3.4]
QID: P2093

A reactor coolant system natural circulation cooldown is in progress with steam release from the steam generator (SG) atmospheric steam relief valves (operated in manual control).

If voids interrupt natural circulation, which one of the following will occur? (Assume feedwater flow rate, SG relief valve position, and decay heat level are constant.)

A. SG pressure will decrease and core exit thermocouple (CET) temperatures will increase.

B. SG pressure will decrease and CET temperatures will remain constant.

C. SG pressure will increase and CET temperatures will increase.

D. SG pressure will increase and CET temperatures will remain constant.

ANSWER: A.

TOPIC: 193008
KNOWLEDGE: K1.25 [3.3/3.4]
QID: P2493

A reactor coolant system natural circulation cooldown is in progress with steam release from the steam generator (SG) atmospheric steam relief valves (operated in manual control). Assume feedwater flow rate, SG relief valve position, and core decay heat level remain constant.

If high point voiding interrupts natural circulation, SG steam flow rate will _____ and core exit thermocouple temperatures will _____.

A. decrease; increase

B. decrease; remain constant

C. increase; increase

D. increase; remain constant

ANSWER: A.

TOPIC: 193009
KNOWLEDGE: K1.02 [2.3/2.8]
QID: P1195

A nuclear power plant is operating at steady-state 80 percent power in the middle of a fuel cycle. All control rods are fully withdrawn and in manual control. Core axial power distribution is peaked below the core midplane.

Which one of the following will cause the maximum axial peaking (or hot channel) factor to initially decrease?

A. One bank of control rods is inserted 10 percent.

B. Turbine load/reactor power is reduced by 10 percent.

C. Reactor coolant system boron concentration is reduced by 10 ppm.

D. A control rod located at the edge of the core fully inserts into the core.

ANSWER: B.

TOPIC: 193009
KNOWLEDGE: K1.02 [2.3/2.8]
QID: P7650

A reactor is operating at 80 percent power near the middle of a fuel cycle. All control rods are nearly fully withdrawn and in manual control. Core axial power distribution is peaked below the core midplane.

Which one of the following will increase the core maximum axial peaking (or hot channel) factor? (Assume <u>no</u> operator action is taken unless stated, and that main turbine load and core xenon distribution do <u>not</u> change unless stated.)

A. Turbine load/reactor power is reduced by 10 percent.

B. The controlling bank of control rods is withdrawn 4 inches.

C. Reactor coolant system boron concentration is reduced by 15 ppm.

D. A fully withdrawn control rod located at the edge of the core drops to the bottom of the core.

ANSWER: C.

TOPIC: 193009
KNOWLEDGE: K1.04 [2.3/2.7]
QID: P3295

A PWR core consists of 50,000 fuel rods; each fuel rod has an active length of 12 feet. The core is producing 1,800 MW of thermal power. If the total heat flux hot channel factor (also called the total core peaking factor) is 2.0, what is the maximum linear power density being produced in the core?

A. 4.5 kW/ft

B. 6.0 kW/ft

C. 9.0 kW/ft

D. 12.0 kW/ft

ANSWER: B.

TOPIC: 193009
KNOWLEDGE: K1.04 [2.3/2.7]
QID: P3794

A PWR core consists of 50,000 fuel rods; each fuel rod has an active length of 12 feet. The core is producing 1,800 MW of thermal power. If the total heat flux hot channel factor (also called the total core peaking factor) is 1.5, what is the maximum linear power density being produced in the core?

A. 4.5 kW/ft

B. 6.0 kW/ft

C. 9.0 kW/ft

D. 12.0 kW/ft

ANSWER: A.

TOPIC: 193009
KNOWLEDGE: K1.04 [2.3/2.7]
QID: P4949

A PWR core consists of 50,000 fuel rods; each fuel rod has an active length of 12 feet. The core is producing 1,800 MW of thermal power. If the total heat flux hot channel factor (also called the total core peaking factor) is 3.0, what is the maximum linear power density being produced in the core?

A. 4.5 kW/ft

B. 6.0 kW/ft

C. 9.0 kW/ft

D. 12.0 kW/ft

ANSWER: C.

TOPIC: 193009
KNOWLEDGE: K1.04 [2.3/2.7]
QID: P5249

A reactor is operating at 3,400 MW thermal power. The core linear power density limit is 12.2 kW/ft.

Given:

- The reactor core contains 198 fuel assemblies.
- Each fuel assembly contains 262 fuel rods, each with an active length of 12 feet.
- The highest total peaking factors measured in the core are as follows:

  Location A: 2.5
  Location B: 2.4
  Location C: 2.3
  Location D: 2.2

Which one of the following describes the operating conditions in the core relative to the linear power density limit?

A. All locations in the core are operating below the linear power density limit.

B. Location A has exceeded the linear power density limit while locations B, C, and D are operating below the limit.

C. Locations A and B have exceeded the linear power density limit while locations C and D are operating below the limit.

D. Locations A, B, and C have exceeded the linear power density limit while location D is operating below the limit.

ANSWER: D.

TOPIC: 193009
KNOWLEDGE: K1.04 [2.3/2.7]
QID: P6249 (B6247)

A reactor is operating at steady-state conditions in the power range with the following average temperatures in a core plane:

$T_{coolant}$ = 550°F
$T_{fuel\ centerline}$ = 1,680°F

Assume that the fuel rod heat transfer coefficients and reactor coolant temperatures are equal throughout the core plane. If the maximum total peaking factor in the core plane is 2.1, what is the maximum fuel centerline temperature in the core plane?

A. 2,923°F

B. 3,528°F

C. 4,078°F

D. 4,683°F

ANSWER: A.

TOPIC: 193009
KNOWLEDGE: K1.04 [2.3/2.7]
QID: P7690

A reactor is operating at 3,300 MW thermal power. The core linear power density limit is 12.4 kW/ft.

Given:

- The reactor core contains 198 fuel assemblies.
- Each fuel assembly contains 262 fuel rods, each with an active length of 12 feet.
- The highest total peaking factors measured in the core are as follows:

  Location A: 2.5
  Location B: 2.4
  Location C: 2.3
  Location D: 2.2

Which one of the following describes the operating conditions in the core relative to the linear power density limit?

A. All locations in the core are operating below the linear power density limit.

B. Location A has exceeded the linear power density limit while locations B, C, and D are operating below the limit.

C. Locations A and B have exceeded the linear power density limit while locations C and D are operating below the limit.

D. Locations A, B, and C have exceeded the linear power density limit while location D is operating below the limit.

ANSWER: C.

TOPIC: 193009
KNOWLEDGE: K1.05 [3.1/3.5]
QID: P56

What is the basis for the limit on maximum linear power density (kW/ft)?

A. To provide assurance of fuel integrity.

B. To prevent xenon-135 oscillations.

C. To allow for fuel pellet manufacturing tolerances.

D. To prevent nucleate boiling.

ANSWER: A.

TOPIC: 193009
KNOWLEDGE: K1.05 [3.1/3.5]
QID: P94

If a reactor is operated within the core thermal limits, then...

A. plant thermal efficiency is optimized.

B. fuel cladding integrity is ensured.

C. pressurized thermal shock will be prevented.

D. reactor vessel thermal stresses will be minimized.

ANSWER: B.

TOPIC: 193009
KNOWLEDGE: K1.05 [3.1/3.5]
QID: P396 (B1793)

The 2,200°F maximum fuel cladding temperature limit is imposed because...

A. 2,200°F is approximately 500°F below the fuel cladding melting temperature.

B. the rate of the zircaloy-steam reaction increases significantly at temperatures above 2,200°F.

C. any cladding temperature higher than 2,200°F correlates to a fuel centerline temperature above the fuel melting point.

D. the thermal conductivity of zircaloy decreases rapidly at temperatures above 2,200°F.

ANSWER: B.

TOPIC: 193009
KNOWLEDGE: K1.05 [3.1/3.5]
QID: P894

During normal operation, fuel cladding integrity is ensured by...

A. the primary system relief valves.

B. core bypass flow restrictions.

C. the secondary system relief valves.

D. operating within core thermal limits.

ANSWER: D.

TOPIC: 193009
KNOWLEDGE: K1.05 [3.1/3.5]
QID: P994

Maximum fuel cladding integrity is maintained by...

A. always operating below 110 percent of reactor coolant system design pressure.

B. actuation of the reactor protection system upon a reactor accident.

C. ensuring that actual heat flux is always less than critical heat flux.

D. ensuring operation above the critical heat flux during all operating conditions.

ANSWER: C.

TOPIC: 193009
KNOWLEDGE: K1.05 [3.1/3.5]
QID: P1194

Peaking (or hot channel) factors are used to establish a maximum reactor power level such that fuel pellet temperature is limited to prevent _____ of the fuel pellets; and fuel cladding temperature is limited to prevent _____ of the fuel cladding during most analyzed transients and abnormal conditions.

A. melting; melting

B. excessive expansion; melting

C. melting; excessive oxidation

D. excessive expansion; excessive oxidation

ANSWER: C.

TOPIC: 193009
KNOWLEDGE: K1.05 [3.1/3.5]
QID: P1295

Reactor thermal limits are established to...

A. ensure the integrity of the reactor fuel.

B. prevent exceeding reactor vessel mechanical limitations.

C. minimize the coolant temperature rise across the core.

D. establish control rod insertion limits.

ANSWER: A.

TOPIC: 193009
KNOWLEDGE: K1.05 [3.1/3.5]
QID: P1395 (B1893)

Thermal limits are established to protect the reactor, and thereby protect the public during nuclear power plant operations, which include...

A. normal operations only.

B. normal and abnormal operations only.

C. normal, abnormal, and postulated accident operations only.

D. normal, abnormal, postulated and unpostulated accident operations.

ANSWER: C.

TOPIC: 193009
KNOWLEDGE: K1.05 [3.1/3.5]
QID: P2194 (B2194)

Which one of the following describes the basis for the 2,200°F maximum fuel cladding temperature limit?

A. 2,200°F is approximately 500°F below the fuel cladding melting temperature.

B. The material strength of zircaloy decreases rapidly at temperatures above 2,200°F.

C. The rate of the zircaloy-water reaction increases significantly at temperatures above 2,200°F.

D. At the normal operating pressure of the reactor vessel, a cladding temperature above 2,200°F indicates that the critical heat flux has been exceeded.

ANSWER: C.

TOPIC: 193009
KNOWLEDGE: K1.05 [3.1/3.5]
QID: P2796

Given the following initial parameters for a segment of a fuel rod:

Power density = 3 kW/ft
$T_{coolant}$ = 579°F
$T_{fuel\ centerline}$ = 2,400°F

Reactor power is increased such that the following parameters now exist for the same fuel rod segment:

Power density = 5 kW/ft
$T_{coolant}$ = 590°F
$T_{fuel\ centerline}$ = ?

Assuming <u>no</u> boiling occurs and coolant flow rate is unchanged, what will be the new stable $T_{fuel\ centerline}$?

A. 3,035°F

B. 3,614°F

C. 3,625°F

D. 4,590°F

ANSWER: C.

TOPIC: 193009
KNOWLEDGE: K1.05 [3.1/3.5]
QID: P2995 (B2292)

Which one of the following describes the basis for the 2,200°F maximum fuel cladding temperature limit?

A. 2,200°F is approximately 500°F below the fuel cladding melting temperature.

B. The rate of the zircaloy-steam reaction increases significantly above 2,200°F.

C. If fuel cladding temperature reaches 2,200°F, the onset of transition boiling is imminent.

D. The differential expansion between the fuel pellets and the fuel cladding becomes excessive at temperatures greater than 2,200°F.

ANSWER: B.

TOPIC: 193009
KNOWLEDGE: K1.07 [3.1/3.5]
QID: P383 (B394)

Refer to the drawing of a fuel rod and coolant flow channel (see figure below).

Given the following initial core parameters:

Reactor power = 100 percent
$T_{coolant}$ = 500°F
$T_{fuel\ centerline}$ = 3,000°F

What would the fuel centerline temperature be if the total fuel-to-coolant thermal conductivity doubled? (Assume reactor power and $T_{coolant}$ are constant.)

A. 1,000°F

B. 1,250°F

C. 1,500°F

D. 1,750°F

ANSWER: D.

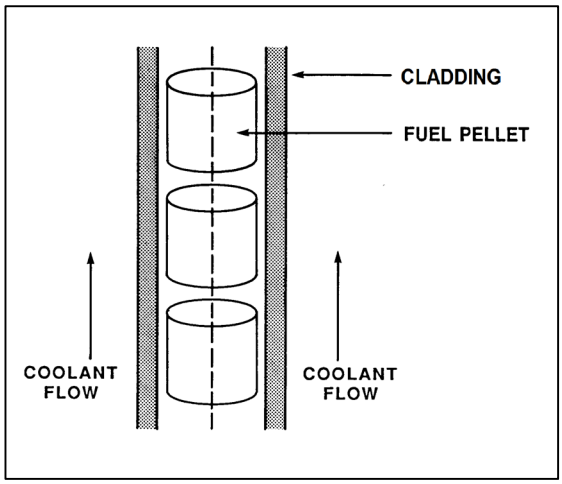

TOPIC: 193009
KNOWLEDGE: K1.07 [3.1/3.5]
QID: P394 (B396)

The pellet-to-cladding gap in fuel rod construction is designed to...

A. decrease fuel pellet densification and elongation.

B. reduce fission product gas pressure buildup.

C. increase heat transfer rate.

D. reduce internal cladding strain.

ANSWER: D.

TOPIC: 193009
KNOWLEDGE: K1.07 [3.1/3.5]
QID: P495 (B495)

Refer to the drawing of a fuel rod and coolant flow channel (see figure below).

Given the following initial core parameters:

Reactor power = 100 percent
$T_{coolant}$ = 500°F
$T_{fuel\ centerline}$ = 2,500°F

What would the fuel centerline temperature be if the total fuel-to-coolant thermal conductivity doubled? (Assume reactor power and $T_{coolant}$ are constant.)

A. 1,250°F

B. 1,300°F

C. 1,400°F

D. 1,500°F

ANSWER: D.

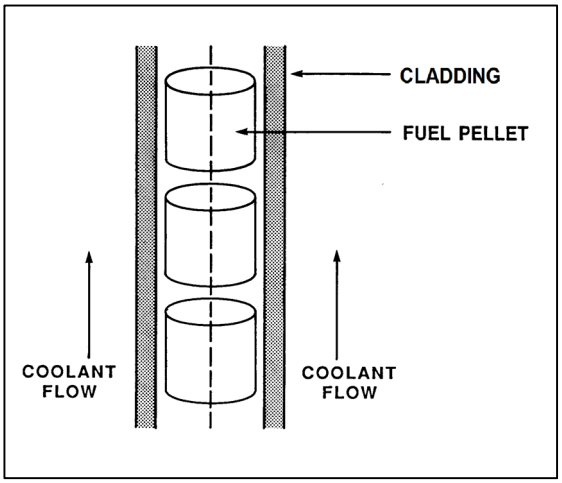

TOPIC: 193009
KNOWLEDGE: K1.07 [3.1/3.5]
QID: P1095

A reactor is operating at steady-state 80 percent power with all control rods fully withdrawn and in manual control. Compared to a 50 percent insertion of one control rod, a 50 percent insertion of a group (or bank) of control rods will cause a _____ increase in the maximum axial peaking factor and a _____ increase in the maximum radial peaking factor. (Assume reactor power remains constant.)

A. smaller; smaller

B. smaller; larger

C. larger; smaller

D. larger; larger

ANSWER: C.

TOPIC: 193009
KNOWLEDGE: K1.07 [3.1/3.5]
QID: P1594 (B1594)

Refer to the drawing of a fuel rod and coolant flow channel (see figure below).

Given the following initial core parameters:

Reactor power = 100 percent
$T_{coolant}$ = 500°F
$T_{fuel\ centerline}$ = 2,700°F

What would the fuel centerline temperature be if the total fuel-to-coolant thermal conductivity doubled? (Assume reactor power and $T_{coolant}$ are constant.)

A. 1,100°F

B. 1,350°F

C. 1,600°F

D. 1,850°F

ANSWER: C.

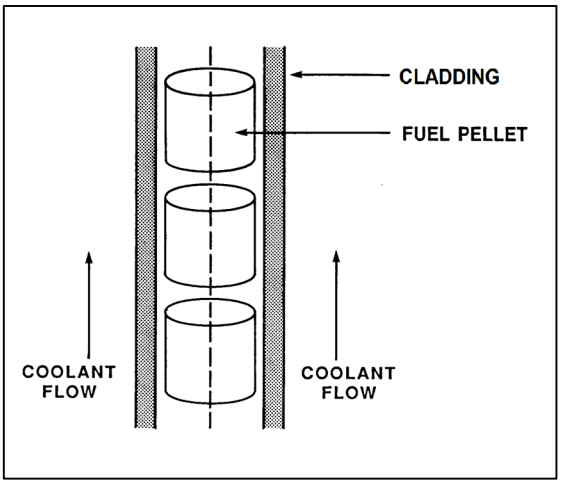

TOPIC: 193009
KNOWLEDGE: K1.07 [3.1/3.5]
QID: P1795

A reactor is operating at 80 percent power with all control rods fully withdrawn. Compared to a 50 percent insertion of a group (or bank) of control rods, a 50 percent insertion of a single control rod will cause a _____ increase in the maximum axial peaking factor and a _____ increase in the maximum radial peaking factor. (Assume reactor power remains constant.)

A. larger; larger

B. larger; smaller

C. smaller; larger

D. smaller; smaller

ANSWER: C.

TOPIC: 193009
KNOWLEDGE: K1.07 [3.1/3.5]
QID: P1894 (B1395)

Which one of the following describes the fuel-to-coolant thermal conductivity for a fuel rod at the end of a fuel cycle (EOC) when compared to the beginning of the same fuel cycle (BOC)?

A. Smaller at EOC, due to fuel pellet densification.

B. Smaller at EOC, due to contamination of fill gas with fission product gases.

C. Larger at EOC, due to reduction in gap between the fuel pellets and cladding.

D. Larger at EOC, due to a greater temperature difference between the fuel pellets and coolant.

ANSWER: C.

TOPIC: 193009
KNOWLEDGE: K1.07 [3.1/3.5]
QID: P1994 (B1995)

Refer to the drawing of a fuel rod and coolant flow channel (see figure below).

Given the following initial core parameters:

Reactor power = 80 percent
$T_{coolant}$ = 540°F
$T_{fuel\ centerline}$ = 2,540°F

What would the fuel centerline temperature be if the total fuel-to-coolant thermal conductivity doubled? (Assume reactor power and $T_{coolant}$ are constant.)

A. 1,270°F

B. 1,370°F

C. 1,440°F

D. 1,540°F

ANSWER: D.

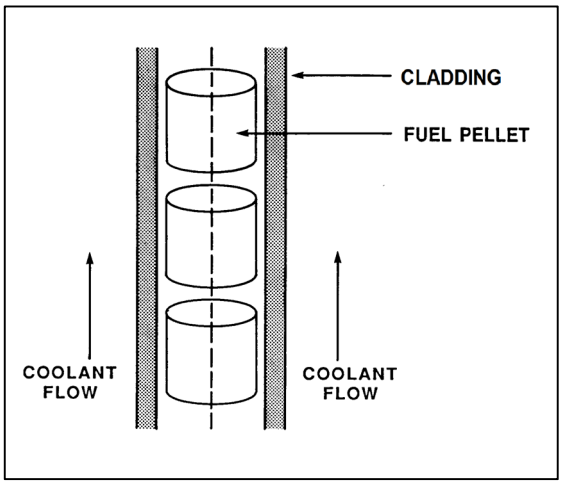

TOPIC: 193009
KNOWLEDGE: K1.07 [3.1/3.5]
QID: P2195 (B2192)

Which one of the following describes the fuel-to-coolant thermal conductivity for a fuel rod at the beginning of a fuel cycle (BOC) compared to the end of a fuel cycle (EOC)?

A. Larger at BOC, due to a higher fuel pellet density.

B. Larger at BOC, due to lower contamination of fuel rod fill gas with fission product gases.

C. Smaller at BOC, due to a larger gap between the fuel pellets and cladding.

D. Smaller at BOC, due to a smaller corrosion film on the surface of the fuel rods.

ANSWER: C.

TOPIC: 193009
KNOWLEDGE: K1.07 [3.1/3.5]
QID: P2296 (B2696)

Refer to the drawing of a fuel rod and coolant flow channel (see figure below).

Given the following initial core parameters:

Reactor power = 60 percent
$T_{coolant}$ = 560°F
$T_{fuel\ centerline}$ = 2,500°F

What would the fuel centerline temperature be if the total fuel-to-coolant thermal conductivity doubled? (Assume reactor power and $T_{coolant}$ are constant.)

A. 1,080°F

B. 1,250°F

C. 1,530°F

D. 1,810°F

ANSWER: C.

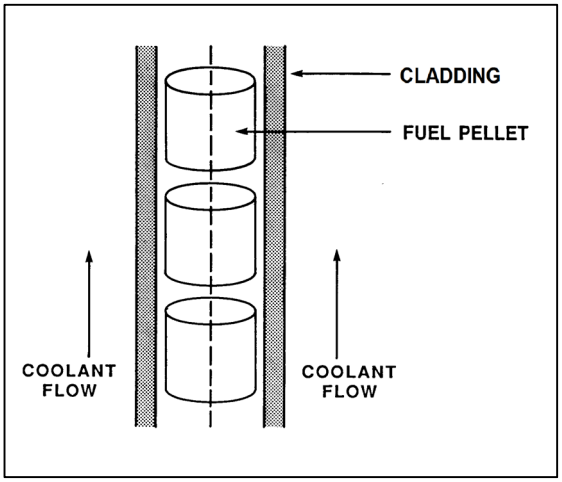

TOPIC: 193009
KNOWLEDGE: K1.07 [3.1/3.5]
QID: P2395 (B2394)

Refer to the drawing of a fuel rod and coolant flow channel (see figure below).

The reactor is shut down with the following parameter values:

$T_{coolant}$ = 320°F
$T_{fuel\ centerline}$ = 780°F

What would the fuel centerline temperature be if the total fuel-to-coolant thermal conductivity doubled? (Assume core decay heat level and $T_{coolant}$ are constant.)

A. 550°F

B. 500°F

C. 450°F

D. 400°F

ANSWER: A.

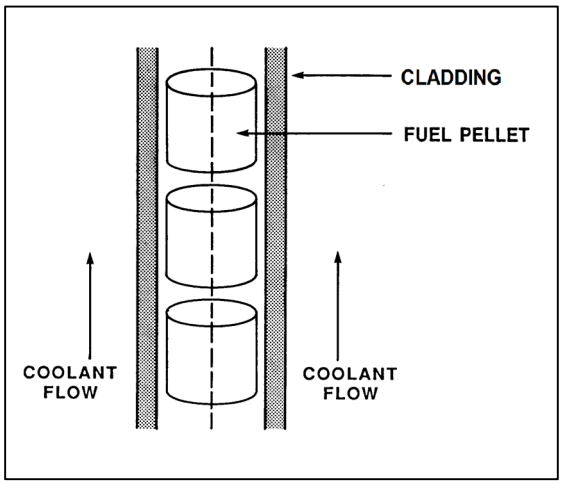

TOPIC: 193009
KNOWLEDGE: K1.07 [2.9/3.3]
QID: P3195 (B3193)

Refer to the drawing of a fuel rod and coolant flow channel (see figure below).

The reactor is shut down at the beginning of a fuel cycle with the following average parameter values:

$T_{coolant}$ = 440°F
$T_{fuel\ centerline}$ = 780°F

What will the fuel centerline temperature be at the end of the fuel cycle with the same coolant temperature and reactor decay heat conditions if the total fuel-to-coolant thermal conductivity doubles?

A. 610°F

B. 580°F

C. 550°F

D. 520°F

ANSWER: A.

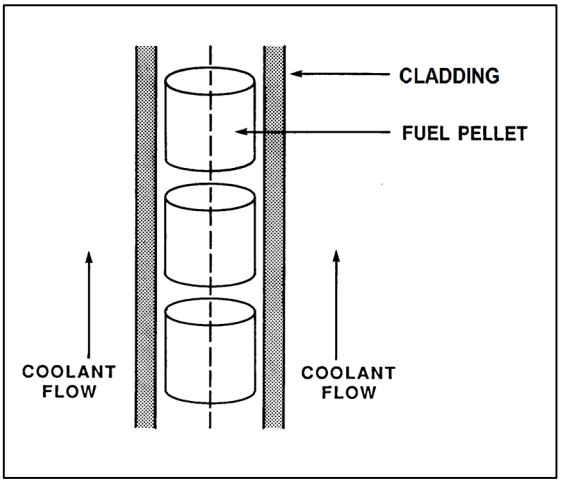

TOPIC: 193009
KNOWLEDGE: K1.07 [2.9/3.3]
QID: P3395 (B1697)

Refer to the drawing of a fuel rod and coolant flow channel (see figure below).

Given the following initial core parameters:

Reactor power = 50 percent
$T_{coolant}$ = 550°F
$T_{fuel\ centerline}$ = 2,750°F

What will the fuel centerline temperature be if the total fuel-to-coolant thermal conductivity doubles? (Assume reactor power and $T_{coolant}$ are constant.)

A. 1,100°F

B. 1,375°F

C. 1,525°F

D. 1,650°F

ANSWER: D.

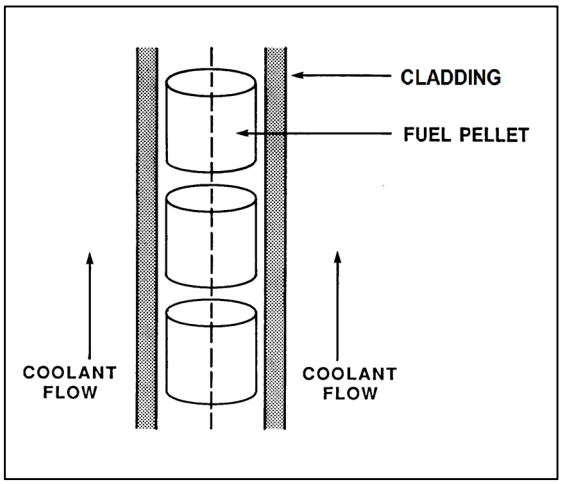

TOPIC: 193009
KNOWLEDGE: K1.07 [2.9/3.3]
QID: P3895

Refer to the drawing of a fuel rod and coolant flow channel (see figure below).

Given the following initial stable core parameters:

Reactor power = 50 percent
$T_{coolant}$ = 550°F
$T_{fuel\ centerline}$ = 2,250°F

Assume the total heat transfer coefficient and the reactor coolant temperature do not change. What will the stable fuel centerline temperature be if reactor power is increased to 75 percent?

A. 2,550°F

B. 2,800°F

C. 2,950°F

D. 3,100°F

ANSWER: D.

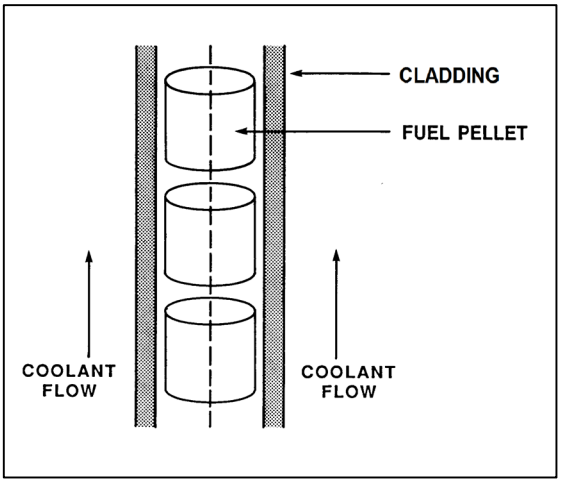

TOPIC: 193009
KNOWLEDGE: K1.07 [2.9/3.3]
QID: P6449 (B6449)

Consider a new fuel rod operating at a constant power level for several weeks. During this period, fuel pellet densification in the fuel rod causes the heat transfer rate from the fuel pellets to the cladding to _____; this change causes the average fuel temperature in the fuel rod to _____.

A. decrease; increase

B. decrease; decrease

C. increase; increase

D. increase; decrease

ANSWER: A.

TOPIC: 193009
KNOWLEDGE: K1.07 [2.9/3.3]
QID: P7630

If fuel pellet densification occurs in a fuel rod producing a constant power output, the average linear power density in the fuel rod will _____ because pellet densification causes fuel pellets to _____.

A. decrease; swell

B. decrease; shrink

C. increase; swell

D. increase; shrink

ANSWER: D.

TOPIC: 193010
KNOWLEDGE: K1.01 [2.8/3.2]
QID: P97 (B899)

The pressure stress on a reactor vessel wall is...

A. tensile across the entire wall.

B. compressive across the entire wall.

C. tensile on the inner wall, compressive on the outer wall.

D. compressive on the inner wall, tensile on the outer wall.

ANSWER: A.

TOPIC: 193010
KNOWLEDGE: K1.01 [2.8/3.2]
QID: P296

Brittle fracture is the fragmentation of metal resulting from the application of _____ stress at relatively _____ temperatures.

A. compressive; high

B. compressive; low

C. tensile; high

D. tensile; low

ANSWER: D.

TOPIC: 193010
KNOWLEDGE: K1.01 [2.8/3.2]
QID: P397 (B398)

The conditions for brittle fracture of the reactor vessel are most closely approached at…

A. 400°F, 10 psig.

B. 400°F, 400 psig.

C. 120°F, 10 psig.

D. 120°F, 400 psig.

ANSWER: D.

TOPIC: 193010
KNOWLEDGE: K1.01 [2.8/3.2]
QID: P497 (B499)

Which one of the following comparisons will result in a <u>higher</u> probability for brittle fracture of the reactor vessel?

A. A high gamma flux in the reactor rather than a high neutron flux.

B. A high oxygen content in the reactor coolant rather than a low oxygen content.

C. A high material strength in the reactor vessel rather than a high material ductility.

D. A rapid 100°F reactor cooldown at a high temperature rather than at a low temperature.

ANSWER: C.

TOPIC: 193010
KNOWLEDGE: K1.01 [2.8/3.2]
QID: P1200

Which one of the following reduces the probability of brittle fracture of the reactor vessel?

A. The presence of a preexisting flaw

B. The presence of a tensile stress

C. Operation at low temperatures

D. Small heatup and cooldown rates

ANSWER: D.

TOPIC: 193010
KNOWLEDGE: K1.01 [2.8/3.2]
QID: P1296

Which one of the following comparisons increases the probability of brittle fracture of a pressure vessel wall?

A. A high temperature rather than a low temperature.

B. A tensile stress rather than a compressive stress.

C. Performing a 100°F/hour heatup rather than a 100°F/hour cooldown.

D. Fabricating the vessel from stainless steel rather than carbon steel.

ANSWER: B.

TOPIC: 193010
KNOWLEDGE: K1.01 [2.8/3.2]
QID: P1396

Which one of the following statements describes the relationship between brittle fracture and the nil-ductility transition temperature?

A. Operation below the nil-ductility transition temperature will result in brittle fracture.

B. Operation above the nil-ductility transition temperature will result in brittle fracture.

C. Operation below the nil-ductility transition temperature will increase the probability of brittle fracture.

D. Operation above the nil-ductility transition temperature will increase the probability of brittle fracture.

ANSWER: C.

TOPIC: 193010
KNOWLEDGE: K1.01 [2.8/3.2]
QID: P1597 (B1899)

Which one of the following comparisons increases the probability for brittle fracture of a reactor vessel wall?

A. Using a vessel fabricated from stainless steel rather than carbon steel.

B. Subjecting the vessel wall to a compressive stress rather than a tensile stress.

C. A high reactor coolant temperature rather than a low reactor coolant temperature.

D. Performing a 100°F/hr cooldown of the reactor rather than a 100°F/hr heatup.

ANSWER: D.

TOPIC: 193010
KNOWLEDGE: K1.01 [2.8/3.2]
QID: P1696 (B2700)

Which one of the following comparisons increases the probability of brittle fracture for a reactor vessel wall?

A. Performing a 50°F/hr cooldown at 1,600 psia rather than a 50°F/hr cooldown at 1,200 psia.

B. A compressive stress across the vessel wall rather than a tensile stress.

C. A high reactor coolant temperature rather than a low reactor coolant temperature.

D. Changing the reactor vessel manufacturing process to increase toughness while maintaining the same yield strength.

ANSWER: A.

TOPIC: 193010
KNOWLEDGE: K1.01 [2.8/3.2]
QID: P1796

Brittle fracture of the reactor vessel wall is <u>least likely</u> to occur at...

A. 120°F; 2,200 psig.

B. 120°F; 400 psig.

C. 400°F; 2,200 psig.

D. 400°F; 400 psig.

ANSWER: D.

TOPIC: 193010
KNOWLEDGE: K1.01 [2.8/3.2]
QID: P1896 (B1299)

Brittle fracture of the reactor vessel (RV) is most likely to occur during a reactor _____ when RV temperature is _____ the nil-ductility transition temperature.

A. cooldown; above

B. heatup; above

C. cooldown; below

D. heatup; below

ANSWER: C.

TOPIC: 193010
KNOWLEDGE: K1.01 [2.8/3.2]
QID: P2096 (B2099)

Which one of the following will normally prevent brittle fracture failure of a reactor vessel?

A. Manufacturing the reactor vessel from low carbon steel.

B. Maintaining reactor vessel pressure below the maximum design limit.

C. Operating above the nil-ductility transition temperature.

D. Maintaining the number of reactor vessel heatup/cooldown cycles within limits.

ANSWER: C.

TOPIC: 193010
KNOWLEDGE: K1.01 [2.8/3.2]
QID: P2196

Brittle fracture of the reactor vessel (RV) is least likely to occur during a _____ of the RV when RV temperature is _____ the nil-ductility transition temperature.

A. cooldown; above

B. heatup; above

C. cooldown; below

D. heatup; below

ANSWER: B.

TOPIC: 193010
KNOWLEDGE: K1.01 [2.8/3.2]
QID: P2496 (B2499)

Brittle fracture of a low-carbon steel is more likely to occur when the temperature of the steel is _____ the nil-ductility transition temperature; and will normally occur when the applied stress is _____ the steel's yield strength (or yield stress) at room temperature.

A. less than; less than

B. less than; greater than

C. greater than; less than

D. greater than; greater than

ANSWER: A.

TOPIC: 193010
KNOWLEDGE: K1.01 [2.8/3.2]
QID: P2497 (B2500)

Which one of the following comparisons will result in a higher probability for brittle fracture of a reactor vessel?

A. A reactor coolant pH of 8.5 rather than 9.0.

B. A high oxygen content in the reactor coolant rather than a low oxygen content.

C. A 50°F/hr cooldown rather than a 100°F/hr heatup.

D. A high gamma flux in the reactor rather than a high neutron flux.

ANSWER: C.

TOPIC: 193010
KNOWLEDGE: K1.01 [2.8/3.2]
QID: P2896

Which one of the following comparisons will result in a lower probability of brittle fracture failure of the reactor vessel?

A. A reactor coolant pH of 9.0 rather than 8.5.

B. A low oxygen content in the reactor coolant rather than a high oxygen content.

C. A 50°F/hr cooldown rather than a 100°F/hr heatup.

D. A high gamma flux in the reactor rather than a high neutron flux.

ANSWER: D.

TOPIC: 193010
KNOWLEDGE: K1.02 [2.4/2.5]
QID: P98

The nil-ductility transition temperature for a reactor vessel is the temperature...

A. below which the probability of brittle fracture significantly increases.

B. determined by fracture mechanics to be equivalent to the reference transition temperature.

C. determined by Charpy V-notch test to be equivalent to the reference transition temperature.

D. below which the yield stress of the metal is inversely proportional to Young's modulus of elasticity.

ANSWER: A.

TOPIC: 193010
KNOWLEDGE: K1.02 [2.4/2.5]
QID: P597 (B2699)

The nil-ductility transition temperature of the reactor vessel (RV) is the temperature...

A. above which the RV metal will elastically deform as RV pressure decreases.

B. above which the RV metal loses its ability to elastically deform as RV pressure increases.

C. below which the RV metal will elastically deform as RV pressure decreases.

D. below which the RV metal loses its ability to elastically deform as RV pressure increases.

ANSWER: D.

TOPIC: 193010
KNOWLEDGE: K1.02 [2.4/2.5]
QID: P697 (B1500)

The nil-ductility transition temperature is the temperature above which...

A. a large compressive stress can result in brittle fracture.

B. a metal exhibits more ductile tendencies.

C. the probability of brittle fracture increases.

D. no appreciable deformation occurs prior to failure.

ANSWER: B.

TOPIC: 193010
KNOWLEDGE: K1.02 [2.4/2.5]
QID: P996 (B2299)

The nil-ductility transition temperature is that temperature...

A. below which vessel failure is imminent.

B. above which vessel failure is imminent.

C. below which the probability of brittle fracture significantly increases.

D. above which the probability of brittle fracture significantly increases.

ANSWER: C.

TOPIC: 193010
KNOWLEDGE: K1.04 [3.3/3.7]
QID: P96 (B100)

The likelihood of brittle fracture failure of the reactor vessel is reduced by...

A. reducing gamma flux exposure.

B. reducing vessel temperature.

C. reducing vessel pressure.

D. increasing vessel age.

ANSWER: C.

TOPIC: 193010
KNOWLEDGE: K1.04 [3.3/3.7]
QID: P142

Which one of the following reactor coolant system (RCS) conditions is <u>least</u> effective in preventing brittle fracture of the reactor vessel?

A. Operating within prescribed RCS heatup and cooldown rate limitations.

B. Operating with RCS temperature greater than the nil-ductility transition temperature.

C. Operating with low RCS pressure when RCS temperature is low.

D. Operating with a ramped RCS temperature as reactor power level increases.

ANSWER: D.

TOPIC: 193010
KNOWLEDGE: K1.04 [3.3/3.7]
QID: P297

Why are reactor coolant system cooldown rate limitations established?

A. Prevent excessive reactivity additions.

B. Prevent brittle fracture of the reactor vessel.

C. Prevent excessive reactor coolant system subcooling.

D. Prevent impurities from precipitating out of solution in the reactor vessel.

ANSWER: B.

TOPIC: 193010
KNOWLEDGE: K1.04 [3.3/3.7]
QID: P300

The thermal stress experienced by the reactor vessel during a reactor coolant system heatup is...

A. compressive at the inner wall and tensile at the outer wall of the vessel.

B. tensile at the inner wall and compressive at the outer wall of the vessel.

C. tensile across the entire vessel wall.

D. compressive across the entire vessel wall.

ANSWER: A.

TOPIC: 193010
KNOWLEDGE: K1.04 [3.3/3.7]
QID: P399 (B399)

The total stress on the reactor vessel inner wall is greater during cooldown than heatup because...

A. thermal stress during heatup totally offsets pressure stress at the inner wall.

B. both pressure stress and thermal stress are tensile at the inner wall during cooldown.

C. the tensile thermal stress at the inner wall is greater in magnitude than the compressive pressure stress at the same location during cooldown.

D. thermal stress during both cooldown and heatup is tensile at the inner wall, but the thermal stress during cooldown is greater in magnitude.

ANSWER: B.

TOPIC: 193010
KNOWLEDGE: K1.04 [3.3/3.7]
QID: P898

The likelihood of brittle fracture failure of the reactor vessel is reduced by...

A. increasing reactor vessel age.

B. reducing reactor vessel pressure.

C. reducing reactor vessel temperature.

D. increasing the reactor vessel gamma flux exposure.

ANSWER: B.

TOPIC: 193010
KNOWLEDGE: K1.04 [3.3/3.7]
QID: P1098

Which one of the following will increase the compressive stress on the outside surface of the reactor vessel wall?

A. Neutron irradiation

B. Gamma irradiation

C. Reactor coolant system cooldown

D. Reactor coolant system heatup

ANSWER: C.

TOPIC: 193010
KNOWLEDGE: K1.04 [3.3/3.7]
QID: P1298

Which one of the following applies a compressive stress to the inner wall of the reactor vessel during a reactor coolant system heatup?

A. Embrittlement stress

B. Yield stress

C. Pressure stress

D. Thermal stress

ANSWER: D.

TOPIC: 193010
KNOWLEDGE: K1.04 [3.3/3.7]
QID: P1397

Which one of the following is the most limiting component for establishing reactor coolant system heatup/cooldown rate limits?

A. Pressurizer

B. Reactor vessel

C. Fuel rod

D. Steam generator

ANSWER: B.

TOPIC: 193010
KNOWLEDGE: K1.04 [3.3/3.7]
QID: P1598

Which one of the following stresses is compressive on the outer wall of the reactor vessel during a reactor coolant system cooldown?

A. Yield stress

B. Thermal stress

C. Pressure stress

D. Embrittlement stress

ANSWER: B.

TOPIC: 193010
KNOWLEDGE: K1.04 [3.3/3.7]
QID: P1897 (B300)

Which one of the following will apply a compressive stress to the outside wall of the reactor vessel?

A. Decreasing reactor coolant system pressure.

B. Increasing reactor coolant system pressure.

C. Performing a reactor coolant system cooldown.

D. Performing a reactor coolant system heatup.

ANSWER: C.

TOPIC: 193010
KNOWLEDGE: K1.04 [3.3/3.7]
QID: P2397 (B2399)

Reactor coolant system pressure-temperature limit curves are derived by using a conservative value for the reactor vessel nil-ductility transition temperature (NDTT).

Early in core life, the conservative value of NDTT is _____ than actual NDTT; the actual NDTT is verified periodically over core life by _____.

A. higher; removing and testing irradiated specimens of reactor vessel material

B. higher; in-service inspection and analysis of the reactor vessel wall

C. lower; removing and testing irradiated specimens of reactor vessel material

D. lower; in-service inspection and analysis of the reactor vessel wall

ANSWER: A.

TOPIC: 193010
KNOWLEDGE: K1.04 [3.3/3.7]
QID: P2998

Which one of the following operating limitations is designed to prevent brittle fracture of the reactor vessel and/or the reactor coolant system (RCS)?

A. Maximum setpoint for the pressurizer safety valves.

B. Maximum differential pressure between the RCS and the steam generators.

C. Maximum RCS pressure versus RCS temperature for a given RCS heatup rate.

D. Maximum differential temperature between the RCS and the pressurizer.

ANSWER: C.

TOPIC: 193010
KNOWLEDGE: K1.04 [3.3/3.7]
QID: P3698 (B3700)

A reactor is shutdown with the shutdown cooling system maintaining reactor coolant temperature at 240°F immediately following an uncontrolled rapid cooldown from 500°F. If reactor coolant temperature is held constant at 240°F, which one of the following describes the change in tensile stress on the inner wall of the reactor vessel (RV) over the next few hours?

A. Decreases, because the temperature gradient across the RV wall will decrease.

B. Increases, because the temperature gradient across the RV wall will decrease.

C. Decreases, because the inner RV wall temperature will approach the nil-ductility transition temperature.

D. Increases, because the inner RV wall temperature will approach the nil-ductility transition temperature.

ANSWER: A.

TOPIC: 193010
KNOWLEDGE: K1.05 [2.9/3.0]
QID: P95

Fast neutron irradiation of the reactor vessel results in _____ stresses within the vessel metal, thereby _____ the nil-ductility transition temperature.

A. decreased; increasing

B. decreased; decreasing

C. increased; increasing

D. increased; decreasing

ANSWER: C.

TOPIC: 193010
KNOWLEDGE: K1.05 [2.9/3.0]
QID: P143

Fast neutron irradiation adversely affects the reactor vessel primarily by causing...

A. metal embrittlement.

B. brittle fracture.

C. flaw initiation.

D. flaw propagation.

ANSWER: A.

TOPIC: 193010
KNOWLEDGE: K1.05 [2.9/3.0]
QID: P298 (B599)

Prolonged exposure of a reactor vessel to a fast neutron flux will cause the nil-ductility transition temperature to...

A. decrease, due to the propagation of existing flaws.

B. increase, due to the propagation of existing flaws.

C. decrease, due to changes in the material properties of the vessel wall.

D. increase, due to changes in the material properties of the vessel wall.

ANSWER: D.

TOPIC: 193010
KNOWLEDGE: K1.05 [2.9/3.0]
QID: P398 (B400)

The likelihood of reactor vessel brittle fracture is <u>decreased</u> by minimizing...

A. the oxygen content in the reactor coolant.

B. operation at high reactor coolant temperatures.

C. the time taken to cool down the reactor.

D. the amount of copper contained in the metal used for the reactor vessel.

ANSWER: D.

TOPIC: 193010
KNOWLEDGE: K1.05 [2.9/3.0]
QID: P499 (B500)

Which one of the following types of radiation most significantly reduces the ductility of a reactor vessel?

A. Beta

B. Thermal neutrons

C. Gamma

D. Fast neutrons

ANSWER: D.

TOPIC: 193010
KNOWLEDGE: K1.05 [2.9/3.0]
QID: P899 (B1900)

After several years of operation, the maximum allowable stress to the reactor vessel is more limited by the inner wall than the outer wall because...

A. the inner wall has a smaller surface area than the outer wall.

B. the inner wall experiences more tensile stress than the outer wall.

C. the inner wall operates at a higher temperature than the outer wall.

D. the inner wall experiences more neutron-induced embrittlement than the outer wall.

ANSWER: D.

TOPIC: 193010
KNOWLEDGE: K1.05 [2.9/3.0]
QID: P998 (B1999)

Prolonged exposure to _____ will cause the nil-ductility transition temperature of the reactor vessel to _____.

A. neutron radiation; increase

B. neutron radiation; decrease

C. normal operating pressure; increase

D. normal operating pressure; decrease

ANSWER: A.

TOPIC: 193010
KNOWLEDGE: K1.05 [2.9/3.0]
QID: P1100 (B1100)

Two identical reactors have been in operation for the last 10 years. Reactor A has experienced 40 heatup/cooldown cycles with an average capacity factor of 50 percent. Reactor B has experienced 30 heatup/cooldown cycles with an average capacity factor of 60 percent.

Which reactor will have the <u>lower</u> reactor vessel nil-ductility transition temperature, and why?

A. Reactor A, due to the lower average capacity factor.

B. Reactor A, due to the greater number of heatup/cooldown cycles.

C. Reactor B, due to the higher average capacity factor.

D. Reactor B, due to the fewer number of heatup/cooldown cycles.

ANSWER: A.

TOPIC: 193010
KNOWLEDGE: K1.05 [2.9/3.0]
QID: P1498

The two factors that have the greatest effect on the nil-ductility transition temperature of the reactor vessel over its life are...

A. thermal neutron flux and vessel copper content.

B. thermal neutron flux and vessel carbon content.

C. fast neutron flux and vessel copper content.

D. fast neutron flux and vessel carbon content.

ANSWER: C.

TOPIC: 193010
KNOWLEDGE: K1.05 [2.9/3.0]
QID: P1699 (B1800)

Two identical reactors have been in operation for the last 10 years. Reactor A has experienced 30 heatup/cooldown cycles with an average capacity factor of 60 percent. Reactor B has experienced 40 heatup/cooldown cycles with an average capacity factor of 50 percent.

Which reactor will have the <u>lower</u> reactor vessel nil-ductility transition temperature, and why?

A. Reactor A, due to the higher average capacity factor.

B. Reactor A, due to the fewer number of heatup/cooldown cycles.

C. Reactor B, due to the lower average capacity factor.

D. Reactor B, due to the greater number of heatup/cooldown cycles.

ANSWER: C.

TOPIC: 193010
KNOWLEDGE: K1.05 [2.9/3.0]
QID: P1898 (B1200)

Which one of the following is the major contributor to embrittlement of a reactor vessel?

A. High-energy fission fragments

B. High operating temperature

C. High-energy gamma radiation

D. High-energy neutron radiation

ANSWER: D.

TOPIC: 193010
KNOWLEDGE: K1.05 [2.9/3.0]
QID: P1997 (B299)

Which one of the following describes the effect of fast neutron irradiation on a reactor vessel?

A. Increased fatigue crack growth rate

B. Increased plastic deformation prior to failure

C. Increased ductility

D. Increased nil-ductility transition temperature

ANSWER: D.

TOPIC: 193010
KNOWLEDGE: K1.05 [2.9/3.0]
QID: P2098 (B2100)

Two identical reactors have been in operation for the last 10 years. Reactor A has experienced 30 heatup/cooldown cycles and has an average capacity factor of 60 percent. Reactor B has experienced 40 heatup/cooldown cycles and has an average capacity factor of 50 percent.

Which reactor will have the <u>higher</u> reactor vessel nil-ductility transition temperature, and why?

A. Reactor A, due to the fewer number of heatup/cooldown cycles.

B. Reactor A, due to the higher average capacity factor.

C. Reactor B, due to the greater number of heatup/cooldown cycles.

D. Reactor B, due to the lower average capacity factor.

ANSWER: B.

TOPIC: 193010
KNOWLEDGE: K1.05 [2.9/3.0]
QID: P2298

Two identical reactors have been in operation for the last 10 years. Reactor A has experienced 40 heatup/cooldown cycles and has an average capacity factor of 50 percent. Reactor B has experienced 30 heatup/cooldown cycles and has an average capacity factor of 60 percent.

Which reactor will have the <u>higher</u> reactor vessel nil-ductility transition temperature?

A. Reactor A, due to the greater number of heatup/cooldown cycles.

B. Reactor A, due to the lower average capacity factor.

C. Reactor B, due to the fewer number of heatup/cooldown cycles.

D. Reactor B, due to the higher average capacity factor.

ANSWER: D.

TOPIC: 193010
KNOWLEDGE: K1.05 [2.9/3.0]
QID: P2599 (B2600)

Two identical reactors are currently shut down for refueling. Reactor A has an average lifetime capacity factor of 60 percent and has been operating for 15 years. Reactor B has an average lifetime capacity factor of 75 percent and has been operating for 12 years.

Which reactor, if any, will have the lower reactor vessel nil-ductility transition temperature, and why?

A. Reactor A, due to the lower average lifetime capacity factor.

B. Reactor B, due to the higher average lifetime capacity factor.

C. Both reactors will have approximately the same nil-ductility transition temperature because each reactor has produced approximately the same number of fissions.

D. Both reactors will have approximately the same nil-ductility transition temperature because fast neutron irradiation in a shutdown reactor is not significant.

ANSWER: C.

TOPIC: 193010
KNOWLEDGE: K1.05 [2.9/3.0]
QID: P2698 (B3000)

Two identical reactors are currently shut down for refueling. Reactor A has achieved an average lifetime capacity factor of 60 percent while operating for 15 years. Reactor B has achieved an average lifetime capacity factor of 60 percent while operating for 12 years.

Which reactor, if any, will have the lower reactor vessel nil-ductility transition temperature, and why?

A. Reactor A, because it has produced more total fissions.

B. Reactor B, because it has produced less total fissions.

C. Both reactors will have approximately the same nil-ductility transition temperature because they have equal average lifetime power capacities.

D. Both reactors will have approximately the same nil-ductility transition temperature because the fission rate in a shutdown reactor is not significant.

ANSWER: B.

TOPIC: 193010
KNOWLEDGE: K1.05 [2.9/3.0]
QID: P2799 (B2800)

Two identical reactors have been in operation for the last 10 years. Reactor A has experienced 30 heatup/cooldown cycles and has an average capacity factor of 60 percent. Reactor B has experienced 20 heatup/cooldown cycles and has an average capacity factor of 80 percent.

Which reactor will have the higher reactor vessel nil-ductility transition temperature, and why?

A. Reactor A, due to the lower average capacity factor.

B. Reactor A, due to the greater number of heatup/cooldown cycles.

C. Reactor B, due to the higher average capacity factor.

D. Reactor B, due to the fewer number of heatup/cooldown cycles.

ANSWER: C.

TOPIC: 193010
KNOWLEDGE: K1.05 [2.9/3.0]
QID: P3197 (B3200)

A reactor is shut down for refueling following 18 months of operation at an average power level of 85 percent. During the shutdown, a reactor vessel metal specimen was removed from the reactor vessel for testing. The testing determined that the nil-ductility transition (NDT) temperature of the specimen decreased from 44°F to 42°F since the previous refueling shutdown.

Which one of the following conclusions is warranted?

A. The test results are credible and the reactor vessel is more likely to experience brittle fracture now than after the previous refueling shutdown.

B. The test results are credible and the reactor vessel is less likely to experience brittle fracture now than after the previous refueling shutdown.

C. The test results are questionable because the specimen NDT temperature would not decrease during the described 18-month period of operation.

D. The test results are questionable because the specimen NDT temperature would decrease by more than 2°F during the described 18-month period of operation.

ANSWER: C.

TOPIC: 193010
KNOWLEDGE: K1.05 [2.9/3.0]
QID: P3297 (B3300)

A reactor is shut down for refueling following 18 months of operation at an average power level of 85 percent. During the shutdown, a reactor vessel metal specimen was removed from the reactor vessel for testing. The testing determined that the nil-ductility transition (NDT) temperature of the specimen increased from 42°F to 44°F since the previous refueling shutdown.

Which one of the following conclusions is warranted?

A. The test results are credible and the reactor vessel is <u>more</u> susceptible to brittle fracture now than after the previous refueling shutdown.

B. The test results are credible and the reactor vessel is <u>less</u> susceptible to brittle fracture now than after the previous refueling shutdown.

C. The test results are questionable because the vessel NDT temperature would <u>not</u> increase during the described 18-month period of operation.

D. The test results are questionable because the vessel NDT temperature would increase by <u>at least</u> 10°F during the described 18-month period of operation.

ANSWER: A.

TOPIC: 193010
KNOWLEDGE: K1.05 [2.9/3.0]
QID: P3598 (B3600)

A reactor is shut down for refueling following 18 months of operation at an average power level of 85 percent. During the shutdown, a reactor vessel metal specimen is removed from the reactor vessel for testing. The testing indicates that the nil-ductility transition (NDT) temperature of the specimen has decreased from 44°F to 32°F since the previous refueling shutdown.

Which one of the following conclusions is warranted?

A. The test results are credible and the reactor vessel is <u>more</u> likely to experience brittle fracture now than after the previous refueling shutdown.

B. The test results are credible and the reactor vessel is <u>less</u> likely to experience brittle fracture now than after the previous refueling shutdown.

C. The test results are questionable because the actual specimen NDT temperature would <u>not</u> decrease during the described 18-month period of operation.

D. The test results are questionable because the actual specimen NDT temperature would decrease by much <u>less</u> than indicated by the test results.

ANSWER: C.

TOPIC: 193010
KNOWLEDGE: K1.05 [2.9/3.0]
QID: P3898 (B3900)

Two identical reactors are currently shut down for refueling. Reactor A has an average lifetime capacity factor of 90 percent and has been operating for 10 years. Reactor B has an average lifetime capacity factor of 80 percent and has been operating for 15 years.

Which reactor will have the <u>higher</u> reactor vessel nil-ductility transition temperature, and why?

A. Reactor A, because it has the higher average lifetime capacity factor.

B. Reactor B, because it has the lower average lifetime capacity factor.

C. Reactor A, because it has produced significantly less fissions.

D. Reactor B, because it has produced significantly more fissions.

ANSWER: D.

TOPIC: 193010
KNOWLEDGE: K1.05 [2.9/3.0]
QID: P4250 (B4250)

A reactor is shut down for refueling following 18 months of operation at an average power level of 85 percent. During the shutdown, a reactor vessel metal specimen was removed from the reactor vessel for testing. The tests determined that the nil-ductility transition (NDT) temperature of the specimen increased from 42°F to 72°F since the previous refueling shutdown.

Which one of the following conclusions is warranted?

A. The test results are credible and the reactor vessel is <u>more</u> likely to experience brittle fracture now than after the previous refueling shutdown.

B. The test results are credible and the reactor vessel is <u>less</u> likely to experience brittle fracture now than after the previous refueling shutdown.

C. The test results are questionable because the specimen NDT temperature would <u>not</u> increase during the described 18-month period of operation.

D. The test results are questionable because the specimen NDT temperature would increase by <u>less</u> than indicated during the described 18-month period of operation.

ANSWER: D.

TOPIC: 193010
KNOWLEDGE: K1.05 [2.9/3.0]
QID: P4450 (B4450)

A reactor is shut down for refueling. During the shutdown, a reactor vessel metal specimen was removed from the reactor vessel for testing. The specimen was last tested six years ago and then returned to its original location in the reactor vessel. During the subsequent six years, the reactor has completed several 18 month fuel cycles with an average power level of 85 percent.

The tests determined that the nil-ductility transition (NDT) temperature of the specimen has remained unchanged at 44°F since it was last tested. Which one of the following conclusions is warranted?

A. The test results are credible; however, the reactor vessel is more susceptible to brittle fracture now than six years ago.

B. The test results are credible; however, the reactor vessel is less susceptible to brittle fracture now than six years ago.

C. The test results are questionable because the specimen NDT temperature should have increased since it was last tested.

D. The test results are questionable because the specimen NDT temperature should have decreased since it was last tested.

ANSWER: C.

TOPIC: 193010
KNOWLEDGE: K1.05 [2.9/3.0]
QID: P4650 (B4650)

Two identical reactors are currently shut down for refueling. Reactor A has achieved an average lifetime capacity factor of 60 percent while operating for 12 years. Reactor B has achieved an average lifetime capacity factor of 60 percent while operating for 15 years.

Which reactor, if any, will have the lower reactor vessel nil-ductility transition temperature?

A. Reactor A, because it has produced less total fissions.

B. Reactor B, because it has produced more total fissions.

C. Both reactors will have approximately the same nil-ductility transition temperature because they have equal average lifetime power capacities.

D. Both reactors will have approximately the same nil-ductility transition temperature because the fission rate in a shutdown reactor is not significant.

ANSWER: A.

TOPIC: 193010
KNOWLEDGE: K1.05 [2.9/3.0]
QID: P5550 (B5550)

Two identical reactors are currently shut down for refueling. Reactor A has an average lifetime capacity factor of 90 percent and has been operating for 24 years. Reactor B has an average lifetime capacity factor of 72 percent and has been operating for 30 years.

Which reactor, if any, will have the lower reactor vessel nil-ductility transition temperature?

A. Reactor A, because it has produced more total fissions.

B. Reactor B, because it has produced less total fissions.

C. Both reactors will have approximately the same nil-ductility transition temperature because fast neutron irradiation in a shutdown reactor is not significant.

D. Both reactors will have approximately the same nil-ductility transition temperature because each reactor has produced approximately the same number of fissions.

ANSWER: D.

TOPIC: 193010
KNOWLEDGE: K1.05 [2.9/3.0]
QID: P6350 (B6350)

Which one of the following comparisons yields a higher probability for brittle fracture of a reactor vessel?

A. A high fast neutron flux in the reactor rather than a high gamma flux.

B. A high material ductility of the reactor vessel rather than a high material strength.

C. A rapid 100°F reactor heatup at a high temperature rather than at a low temperature.

D. A rapid 100°F reactor cooldown at a high temperature rather than at a low temperature.

ANSWER: A.

TOPIC: 193010
KNOWLEDGE: K1.05 [2.9/3.0]
QID: P6950 (B6950)

Two identical reactors are currently shut down for refueling. Reactor A has an average lifetime capacity factor of 90 percent and has been operating for 16 years. Reactor B has an average lifetime capacity factor of 80 percent and has been operating for 18 years.

Which reactor, if any, will have the lower reactor vessel nil-ductility transition temperature, and why?

A. Reactor A, due to the higher average lifetime capacity factor.

B. Reactor B, due to the lower average lifetime capacity factor.

C. Both reactors will have approximately the same nil-ductility transition temperature because each reactor has produced approximately the same number of fissions.

D. Both reactors will have approximately the same nil-ductility transition temperature because fast neutron irradiation in a shutdown reactor is not significant.

ANSWER: C.

TOPIC: 193010
KNOWLEDGE: K1.05 [2.9/3.0]
QID: P7640 (B7640)

Which one of the following comparisons yields a lower probability for brittle fracture of a reactor vessel?

A. A high gamma flux in the reactor rather than a high fast neutron flux.

B. A high material strength of the reactor vessel rather than a high material ductility.

C. A rapid 100°F reactor heatup at a low temperature rather than at a high temperature.

D. A rapid 100°F reactor cooldown at a low temperature rather than at a high temperature.

ANSWER: A.

TOPIC: 193010
KNOWLEDGE: K1.06 [3.6/3.8]
QID: P99

A nuclear power plant is shut down with the reactor coolant system at 1,200 psia and 350°F. Which one of the following would be most likely to cause a pressurized thermal shock to the reactor vessel?

A. A rapid depressurization followed by a rapid heatup.

B. A rapid depressurization followed by a rapid cooldown.

C. A rapid cooldown followed by a rapid pressurization.

D. A rapid heatup followed by a rapid pressurization.

ANSWER: C.

TOPIC: 193010
KNOWLEDGE: K1.06 [3.6/3.8]
QID: P299

Pressurized thermal shock is a condition that can occur following a rapid _____ of the reactor coolant system if system pressure is rapidly _____.

A. cooldown; decreased

B. cooldown; increased

C. heatup; decreased

D. heatup; increased

ANSWER: B.

TOPIC: 193010
KNOWLEDGE: K1.06 [3.6/3.8]
QID: P2800

Which one of the following reactor coolant system (RCS) events would be <u>most</u> likely to cause a pressurized thermal shock to the reactor vessel?

A. Starting a reactor coolant pump in an idle RCS loop with the associated steam generator temperature less than the loop temperature.

B. Starting a reactor coolant pump in an idle RCS loop with the associated steam generator temperature greater than the loop temperature.

C. Continuous emergency coolant injection to the RCS during and after a complete and unisolable rupture of a steam generator steam outlet nozzle.

D. Continuous emergency coolant injection to the RCS during and after a complete and unisolable rupture of a reactor vessel coolant outlet nozzle.

ANSWER: C.

TOPIC: 193010
KNOWLEDGE: K1.07 [3.8/4.1]
QID: P100

During a severe reactor coolant system overcooling transient, a major concern is...

A. accelerated zirconium hydriding.

B. loss of reactor vessel water level.

C. loss of reactor coolant pump net positive suction head.

D. brittle fracture of the reactor vessel.

ANSWER: D.

TOPIC: 193010
KNOWLEDGE: K1.07 [3.8/4.1]
QID: P1000

An uncontrolled cooldown is a brittle fracture concern because it creates a large _____ stress at the _____ wall of the reactor vessel.

A. tensile; inner

B. tensile; outer

C. compressive; inner

D. compressive; outer

ANSWER: A.

TOPIC: 193010
KNOWLEDGE: K1.07 [3.8/4.1]
QID: P1099

During an uncontrolled cooldown of a reactor coolant system, the component most susceptible to brittle fracture is the...

A. reactor vessel.

B. steam generator tube sheet.

C. cold leg accumulator penetration.

D. loop resistance temperature detector penetration.

ANSWER: A.

TOPIC: 193010
KNOWLEDGE: K1.07 [3.8/4.1]
QID: P1199

Which one of the following describes the thermal stress placed on the reactor vessel wall during a cooldown of the reactor coolant system?

A. Tensile across the entire wall.

B. Compressive across the entire wall.

C. Tensile at the inner wall, compressive at the outer wall.

D. Compressive at the inner wall, tensile at the outer wall.

ANSWER: C.

TOPIC: 193010
KNOWLEDGE: K1.07 [3.8/4.1]
QID: P2797

A nuclear power plant heatup is in progress using reactor coolant pumps. The thermal stress applied to the reactor vessel is...

A. tensile across the entire wall.

B. tensile at the inner wall and compressive at the outer wall.

C. compressive across the entire wall.

D. compressive at the inner wall and tensile at the outer wall.

ANSWER: D.