TOPIC: 293001
KNOWLEDGE: K1.03 [2.5/2.7]
QID: B73 (P2673)

Refer to the drawing of a water-filled manometer (see figure below).

The manometer is installed across an orifice in a ventilation duct to determine the direction of airflow. With the manometer conditions as shown, the pressure at P1 is _____ than P2; and the direction of airflow is _____.

A. greater; left to right

B. greater; right to left

C. less; left to right

D. less; right to left

ANSWER: A.

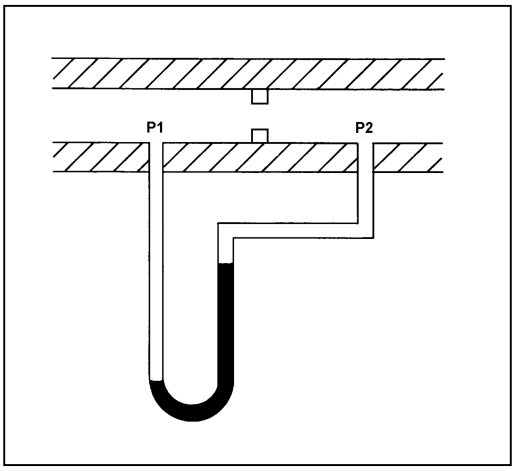

TOPIC: 293001
KNOWLEDGE: K1.03 [2.5/2.7]
QID: B373 (P374)

Refer to the drawing of two water storage tanks with four differential pressure (D/P) level detectors (see figure below).

The tanks are identical and are being maintained at the same constant water level with 17 psia gas pressure above the water. The tanks are surrounded by standard atmospheric pressure. The temperature of the water in the tanks and reference legs is 70°F.

Which one of the level detectors is sensing the greatest D/P?

A. No. 1

B. No. 2

C. No. 3

D. No. 4

ANSWER: B.

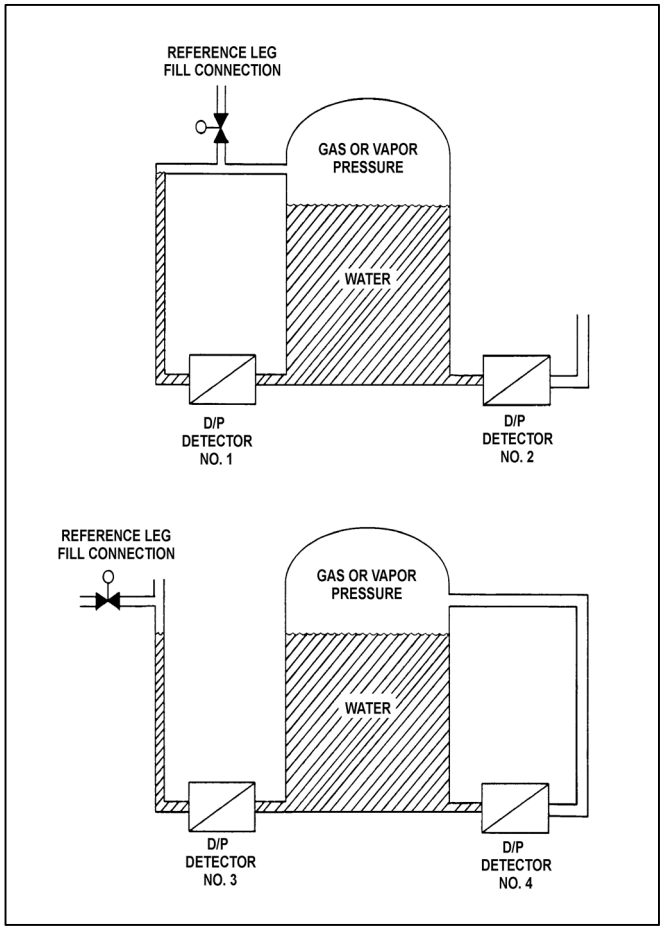

TOPIC: 293001
KNOWLEDGE: K1.03 [2.5/2.7]
QID: B673 (P2973)

Refer to the drawing of a water-filled manometer (see figure below).

The manometer is installed across an orifice in a ventilation duct to determine the direction of airflow. With the manometer conditions as shown, the pressure at P1 is _____ than P2; and the direction of airflow is _____.

A. less; right to left

B. less; left to right

C. greater; right to left

D. greater; left to right

ANSWER: A.

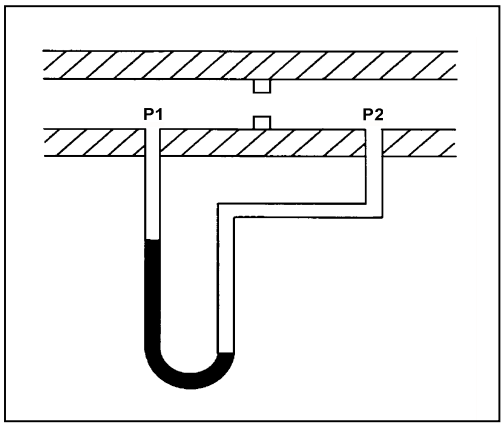

TOPIC: 293001
KNOWLEDGE: K1.03 [2.5/2.7]
QID: B1073 (P2873)

Refer to the drawing of two water storage tanks with four differential pressure (D/P) level detectors (see figure below).

The tanks are identical with equal water levels and 20 psia gas pressure above the water. The tanks are surrounded by standard atmospheric pressure. The temperature of the water in the tanks and reference legs is 70°F.

If each detector experiences a ruptured diaphragm, which detector(s) will produce a lower level indication? (Assume that actual tank and reference leg water levels do <u>not</u> change.)

A. No. 1 only

B. No. 2 only

C. No. 1, 2, and 3

D. No. 2, 3, and 4

ANSWER: D.

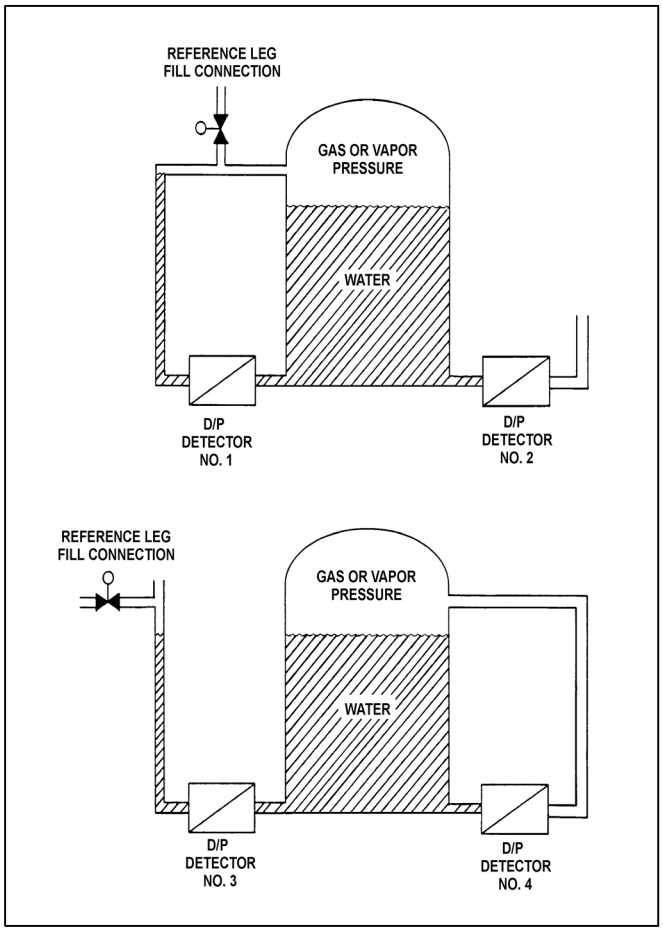

TOPIC: 293001
KNOWLEDGE: K1.03 [2.5/2.7]
QID: B1174 (P1673)

Refer to the drawing of two water storage tanks with four differential pressure (D/P) level detectors (see figure below).

The tanks are identical and are being maintained at 2 psig overpressure, the same constant water level, and a temperature of 60°F. They are surrounded by atmospheric pressure.

If a leak in the top of each tank causes a complete loss of overpressure, which detector(s) will produce a lower level indication?

A. No. 1 only

B. No. 2 only

C. No. 1 and 4

D. No. 2 and 3

ANSWER: D.

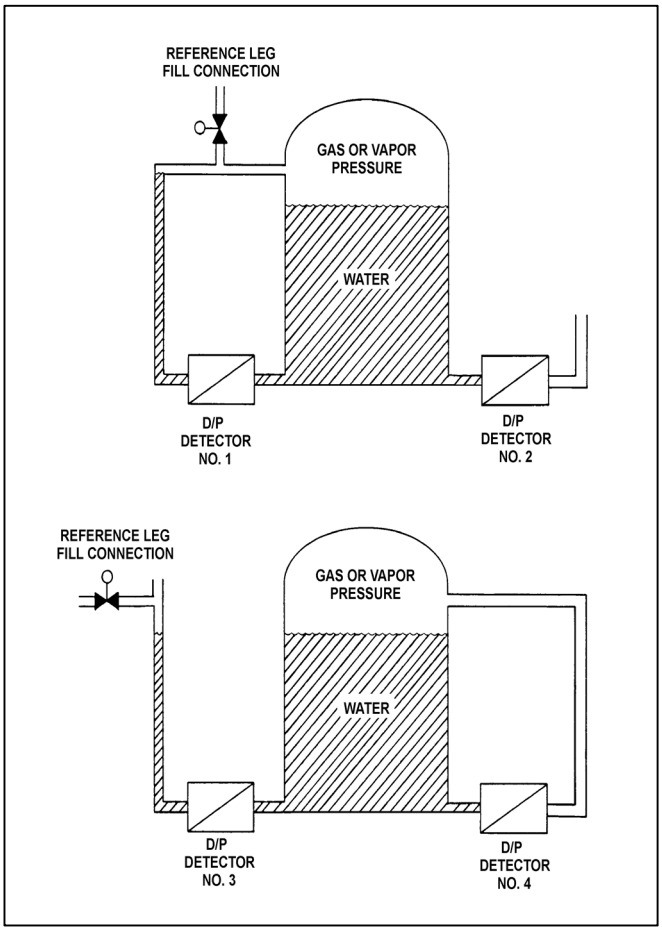

TOPIC: 293001
KNOWLEDGE: K1.03 [2.5/2.7]
QID: B1873 (P573)

An enclosed water storage tank is pressurized with nitrogen to prevent air inleakage. Tank pressure is allowed to vary as water level changes. A differential pressure detector is used to measure the tank level.

To achieve the most accurate level measurement, the low pressure side of the detector should sense which one of the following?

A. The pressure at the midline of the tank.

B. The pressure of the atmosphere surrounding the tank.

C. The pressure of a column of water external to the tank.

D. The pressure of the gas space at the top of the tank.

ANSWER: D.

TOPIC: 293001
KNOWLEDGE: K1.03 [2.5/2.7]
QID: B2373 (P2373)

Refer to the drawing of two water storage tanks with four differential pressure (D/P) level detectors (see figure below).

The tanks are identical and are being maintained at 2 psig overpressure, 60°F, and the same constant water level. The tanks are located within a sealed containment structure that is being maintained at standard atmospheric pressure. All level detectors have been calibrated and are producing the same level indication.

If a ventilation malfunction causes the containment structure pressure to decrease to 13 psia, which detectors will produce the lowest level indications?

A. 1 and 3

B. 2 and 4

C. 1 and 4

D. 2 and 3

ANSWER: C.

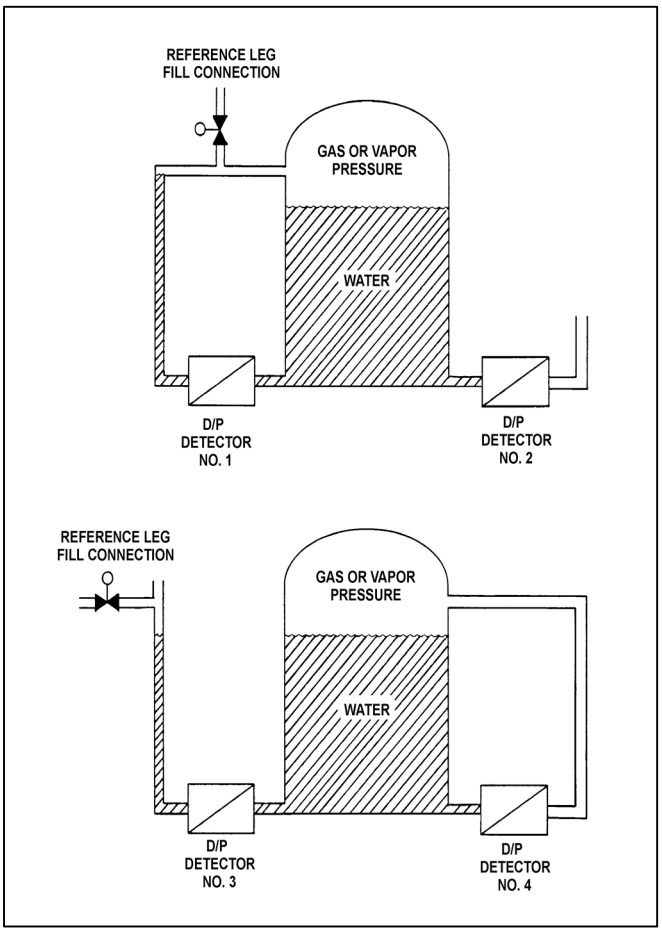

TOPIC: 293001
KNOWLEDGE: K1.03 [2.5/2.7]
QID: B2573 (P2574)

Refer to the drawing of two water storage tanks with four differential pressure (D/P) level detectors (see figure below).

The tanks are identical and are being maintained at 2 psig overpressure, 60°F, and the same constant water level. The tanks are located within a sealed containment structure that is being maintained at standard atmospheric pressure. All level detectors have been calibrated and are producing the same level indication.

If a ventilation malfunction causes the containment structure pressure to decrease to 13 psia, which detectors will produce the highest level indications?

A. 1 and 2

B. 3 and 4

C. 1 and 4

D. 2 and 3

ANSWER: D.

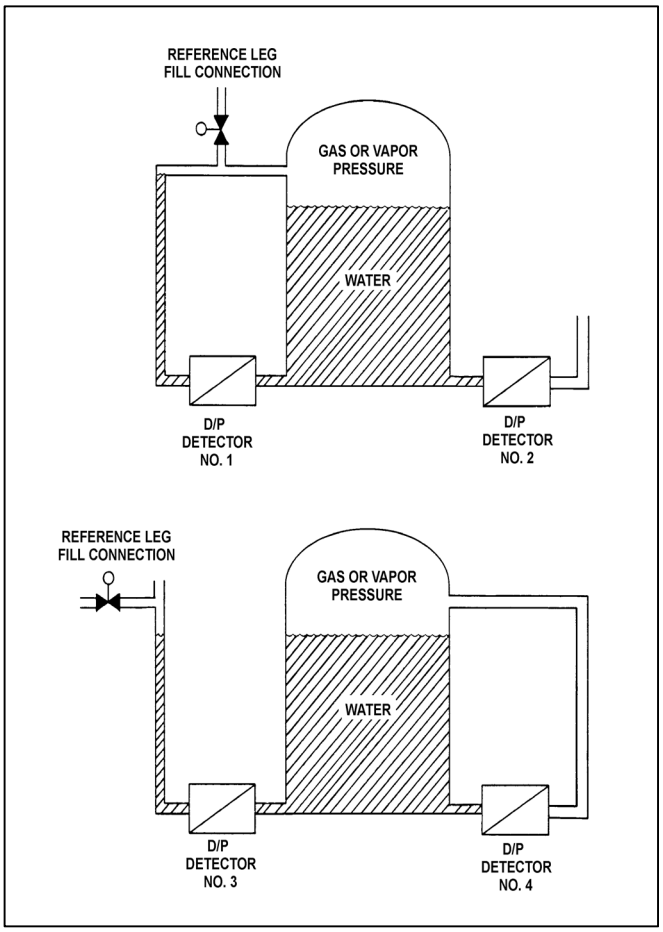

TOPIC: 293001
KNOWLEDGE: K1.03 [2.5/2.7]
QID: B2773

Refer to the drawing of two water storage tanks with four differential pressure (D/P) level detectors (see figure below).

The tanks are identical with equal water levels and 20 psia gas pressure above the water. The tanks are surrounded by standard atmospheric pressure. The temperature of the water in the tanks and reference legs is 70°F.

If each detector experiences a ruptured diaphragm, which detector(s) will produce a higher level indication? (Assume that actual tank and reference leg water levels do <u>not</u> change.)

A. No. 1 only

B. No. 2 only

C. No. 1 and 3

D. No. 2 and 4

ANSWER: A.

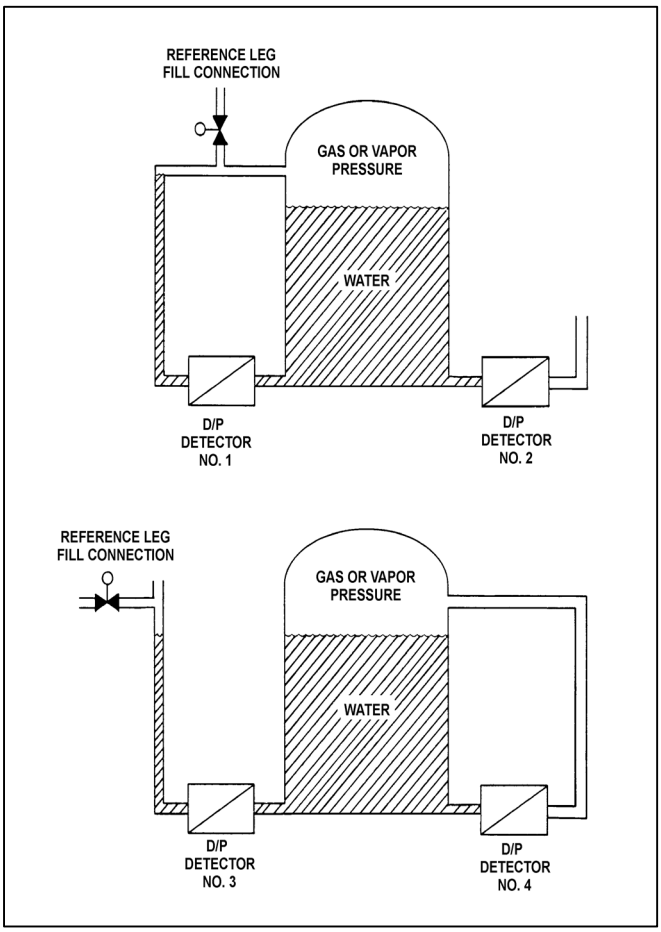

TOPIC: 293001
KNOWLEDGE: K1.03 [2.5/2.7]
QID: B3173 (P3173)

A water storage tank is vented to atmosphere. The tank is located at sea level and contains 100,000 gallons of 80°F water. A pressure gauge at the bottom of the tank reads 5.6 psig. What is the approximate water level in the tank?

A. 13 feet

B. 17 feet

C. 21 feet

D. 25 feet

ANSWER: A.

TOPIC: 293001
KNOWLEDGE: K1.03 [2.5/2.7]
QID: B3673 (P3673)

Refer to the drawing of a tank with a differential pressure (D/P) level detector (see figure below).

If the tank contains 30 feet of water at 60°F, what is the approximate D/P sensed by the detector?

A. 7 psid

B. 13 psid

C. 20 psid

D. 28 psid

ANSWER: B.

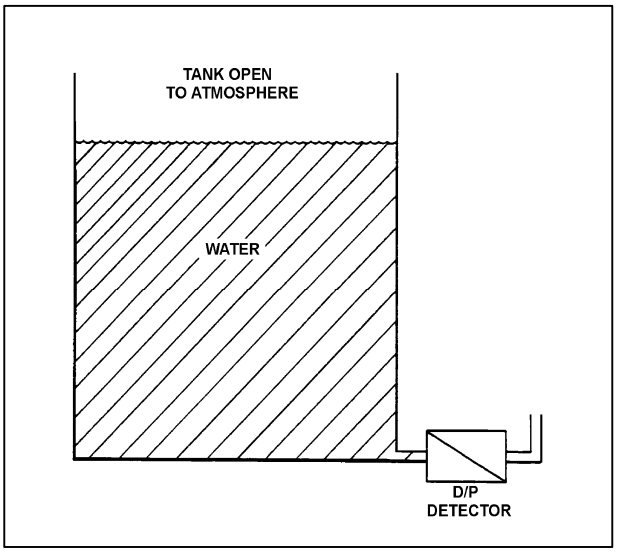

TOPIC: 293001
KNOWLEDGE: K1.03 [2.5/2.7]
QID: B3873 (P3873)

A water storage tank is vented to atmosphere. The tank is located at sea level and contains 100,000 gallons of water at 80°F. A pressure gauge at the bottom of the tank reads 7.3 psig. What is the approximate water level in the tank?

A. 13 feet

B. 17 feet

C. 21 feet

D. 25 feet

ANSWER: B.

TOPIC: 293001
KNOWLEDGE: K1.03 [2.5/2.7]
QID: B4537 (P4537)

A water storage tank is vented to atmosphere. The tank is located at sea level and contains 100,000 gallons of water at 80°F. A pressure gauge at the bottom of the tank reads 9.0 psig. What is the approximate water level in the tank?

A. 13 feet

B. 17 feet

C. 21 feet

D. 25 feet

ANSWER: C.

TOPIC: 293001
KNOWLEDGE: K1.03 [2.5/2.7]
QID: B4837 (P4837)

Refer to the drawing of two water storage tanks with four differential pressure (D/P) level detectors (see figure below).

The tanks are identical and are being maintained at 2 psig overpressure, the same constant water level, and a temperature of 60°F. The tanks are surrounded by atmospheric pressure. All level detectors have been calibrated and are producing the same level indication.

If a leak in the top of each tank causes a complete loss of overpressure in both tanks, which detector(s) will produce the highest level indication(s)?

A. No. 1 only

B. No. 2 only

C. No. 1 and 4

D. No. 2 and 3

ANSWER: C.

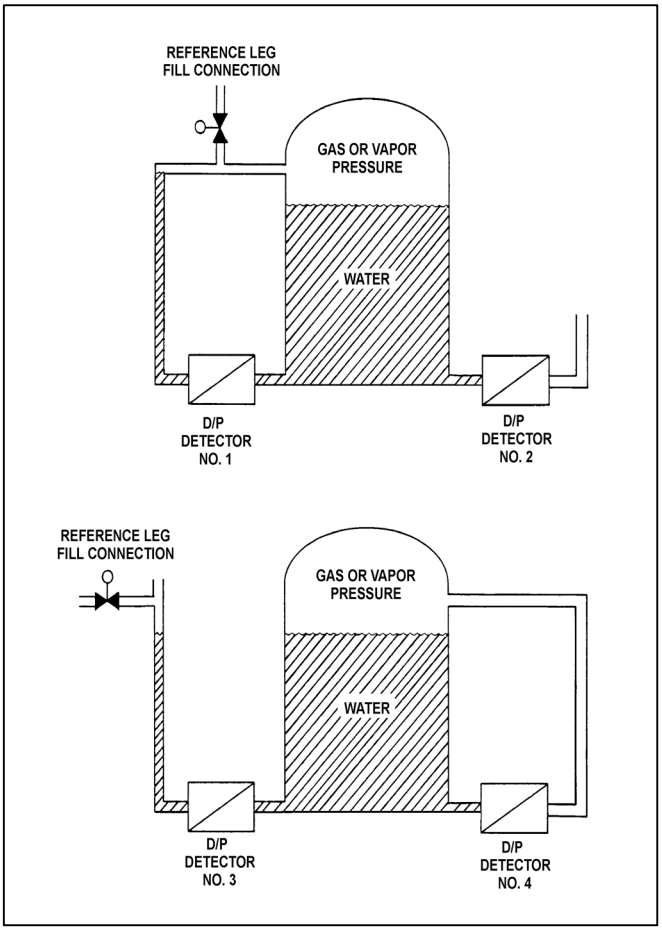

TOPIC: 293001
KNOWLEDGE: K1.03 [2.5/2.7]
QID: B5837 (P5837)

Refer to the drawing of an open water storage tank with a differential pressure (D/P) level indicator that is vented to atmosphere (see figure below). Both the tank and the level indicator are surrounded by standard atmospheric pressure. Tank water temperature is 70°F.

The D/P level indicator is sensing a differential pressure of 4.0 psi. What is the water level in the tank above the instrument penetration?

A. 9.2 feet

B. 16.7 feet

C. 24.7 feet

D. 43.2 feet

ANSWER: A.

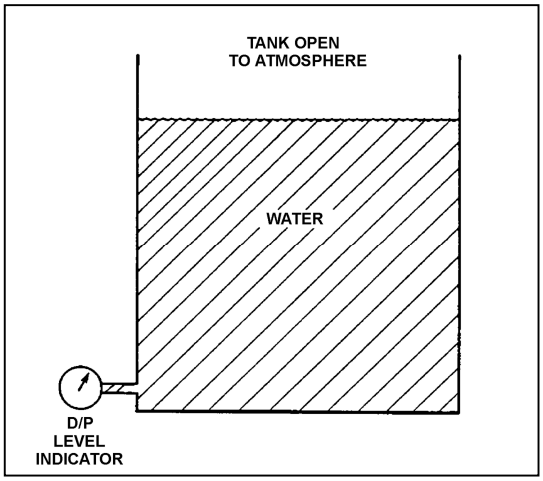

There are no test items available for topic 293002.

TOPIC: 293003
KNOWLEDGE: K1.07 [2.7/2.8]
QID: B474

A steam-water mixture is initially saturated with a quality of 50 percent when a small amount of heat is added. Assuming the pressure remains constant and the mixture remains saturated, the quality of the mixture will _____; and the temperature of the mixture will _____.

A. increase; increase

B. increase; remain the same

C. remain the same; increase

D. remain the same; remain the same

ANSWER: B.

TOPIC: 293003
KNOWLEDGE: K1.07 [2.7/2.8]
QID: B1074 (P674)

A liquid is saturated with 0 percent quality. Assuming pressure remains constant, the addition of a small amount of heat will...

A. raise the steady-state liquid temperature above the boiling point.

B. result in a subcooled liquid.

C. result in some of the liquid vaporizing.

D. result in a superheated liquid.

ANSWER: C.

TOPIC: 293003
KNOWLEDGE: K1.07 [2.7/2.8]
QID: B1874 (P1374)

A steam-water mixture is initially saturated with a quality of 95 percent when a small amount of heat is added to the mixture. If the mixture remains saturated and pressure remains constant, the temperature of the mixture will _____; and the quality of the mixture will _____.

A. increase; remain the same

B. increase; increase

C. remain the same; remain the same

D. remain the same; increase

ANSWER: D.

TOPIC: 293003
KNOWLEDGE: K1.07 [2.7/2.8]
QID: B1974 (P1474)

An open container holds 1.0 lbm of saturated water at standard atmospheric pressure. The addition of 1.0 Btu will…

A. raise the temperature of the water by 1°F.

B. vaporize a portion of the water.

C. increase the density of the water.

D. result in 1°F of superheat.

ANSWER: B.

TOPIC: 293003
KNOWLEDGE: K1.07 [2.7/2.8]
QID: B3374 (P2874)

An open container holds 1.0 lbm of saturated water at standard atmospheric pressure. The addition of 4.0 Btu will...

A. result in 4°F of superheat.

B. vaporize a portion of the water.

C. increase the density of the water.

D. raise the temperature of the water by 4°F.

ANSWER: B.

TOPIC: 293003
KNOWLEDGE: K1.07 [2.7/2.8]
QID: B3474

The temperature of a quantity of water is 212°F.

Which one of the following parameters, when paired with the temperature, provides <u>insufficient</u> information to determine whether the water is a saturated <u>liquid</u> rather than a saturated <u>liquid-vapor mixture</u>?

A. Enthalpy

B. Entropy

C. Pressure

D. Specific volume

ANSWER: C.

TOPIC: 293003
KNOWLEDGE: K1.07 [2.7/2.8]
QID: B3574 (P1974)

A steam-water mixture is initially saturated with a quality of 50 percent when a small amount of heat is added. If pressure remains constant and the mixture remains saturated, mixture steam quality will _____; and mixture temperature will _____.

A. increase; increase

B. increase; remain the same

C. remain the same; increase

D. remain the same; remain the same

ANSWER: B.

TOPIC: 293003
KNOWLEDGE: K1.09 [2.5/2.6]
QID: B146

Which one of the following contains a pair of water states for which an addition of heat will result in a temperature increase?

A. Dry saturated steam and subcooled water.

B. Wet steam and dry saturated steam.

C. Saturated water and dry saturated steam.

D. Subcooled water and wet steam.

ANSWER: A.

TOPIC: 293003
KNOWLEDGE: K1.09 [2.5/2.6]
QID: B875 (P874)

Consider a steam-water mixture with a quality of 99 percent. If pressure remains constant and heat is removed from the mixture, the temperature of the mixture will _____; and the quality of the mixture will _____. (Assume the mixture remains saturated.)

A. decrease; increase

B. decrease; decrease

C. remain the same; increase

D. remain the same; decrease

ANSWER: D.

TOPIC: 293003
KNOWLEDGE: K1.09 [2.5/2.6]
QID: B1274

Which one of the following will occur if 500 Btu is removed from 1.0 lbm of dry saturated steam at 800 psia? (Assume that pressure does <u>not</u> change.)

A. Temperature will decrease.

B. Density will decrease.

C. Specific volume will decrease.

D. Enthalpy will increase.

ANSWER: C.

TOPIC: 293003
KNOWLEDGE: K1.09 [2.5/2.6]
QID: B1474

Which one of the following will decrease if heat is added to a saturated vapor at a constant pressure?

A. Density

B. Temperature

C. Entropy

D. Enthalpy

ANSWER: A.

TOPIC: 293003
KNOWLEDGE: K1.09 [2.5/2.6]
QID: B1574 (P1574)

Consider a steam-water mixture with a quality of 79 percent. If pressure remains constant and heat is added to the mixture, the temperature of the mixture will _____; and the quality of the mixture will _____. (Assume the mixture remains saturated.)

A. increase; increase

B. increase; remain the same

C. remain the same; increase

D. remain the same; remain the same

ANSWER: C.

TOPIC: 293003
KNOWLEDGE: K1.09 [2.5/2.6]
QID: B2074 (P2074)

Consider a saturated steam-water mixture at 500°F with a quality of 90 percent. If the pressure of the mixture is decreased with no heat gain or loss, the temperature of the mixture will _____; and the quality of the mixture will _____. (Assume the mixture remains saturated.)

A. decrease; decrease

B. decrease; increase

C. remain the same; decrease

D. remain the same; increase

ANSWER: B.

TOPIC: 293003
KNOWLEDGE: K1.09 [2.5/2.6]
QID: B2174

Consider dry saturated steam at 470°F. If the pressure of the steam remains constant while heat is added, steam temperature will _____; and steam quality will _____.

A. remain the same; remain the same

B. remain the same; increase

C. increase; remain the same

D. increase; increase

ANSWER: C.

TOPIC: 293003
KNOWLEDGE: K1.09 [2.5/2.6]
QID: B2975 (P2974)

Consider a sealed vessel containing 1,000 lbm of a saturated steam-water mixture at 500°F. The vessel is perfectly insulated with no heat gain or loss occurring.

If a leak near the bottom of the vessel results in a loss of 10 percent of the liquid volume from the vessel, the temperature of the mixture will _____; and the overall quality of the mixture will _____. (Assume the mixture remains saturated.)

A. decrease; increase

B. decrease; decrease

C. remain the same; increase

D. remain the same; decrease

ANSWER: A.

TOPIC: 293003
KNOWLEDGE: K1.09 [2.5/2.6]
QID: B7709 (P7709)

Consider 1.0 lbm of dry saturated steam at 200 psia. If pressure does <u>not</u> change, which one of the following will be caused by the addition of 6.0 Btu to the steam?

A. The steam will remain saturated at the same temperature.

B. The steam will become superheated at the same temperature.

C. The steam will remain saturated at a higher temperature.

D. The steam will become superheated at a higher temperature.

ANSWER: D.

TOPIC: 293003
KNOWLEDGE: K1.12 [2.5/2.6]
QID: B141

What is the approximate quality of wet steam leaving a reactor at 530 psig with an enthalpy of 928.9 Btu/lbm?

A. 25 percent

B. 37 percent

C. 63 percent

D. 75 percent

ANSWER: C.

TOPIC: 293003
KNOWLEDGE: K1.12 [2.5/2.6]
QID: B2375 (P2374)

Which one of the following describes the effect of removing heat from a saturated steam-water mixture that remains in a saturated condition?

A. Temperature will increase.

B. Temperature will decrease.

C. Quality will increase.

D. Quality will decrease.

ANSWER: D.

TOPIC: 293003
KNOWLEDGE: K1.12 [2.5/2.6]
QID: B2874 (P1976)

Which one of the following is the approximate quality of a steam-water mixture at 467°F with an enthalpy of 1,000 Btu/lbm?

A. 24 percent

B. 27 percent

C. 73 percent

D. 76 percent

ANSWER: C.

TOPIC: 293003
KNOWLEDGE: K1.12 [2.5/2.6]
QID: B3075 (P3074)

The temperature of a saturated steam-water mixture is 467°F.

Which one of the following parameter values, when paired with the temperature, provides <u>insufficient</u> information to determine the quality of the mixture?

A. Pressure is 499.96 psia

B. Enthalpy is 977.33 Btu/lbm

C. Entropy is 1.17 Btu/lbm -°R

D. Specific volume is 0.817 ft^3/lbm

ANSWER: A.

TOPIC: 293003
KNOWLEDGE: K1.16 [2.8/2.8]
QID: B74

Given a reactor operating at 985 psig with a feedwater inlet temperature of 400°F, what is the amount of feedwater subcooling?

A. 136.6°F

B. 140.6°F

C. 144.6°F

D. 148.6°F

ANSWER: C.

TOPIC: 293003
KNOWLEDGE: K1.16 [2.8/2.8]
QID: B775

What effect will occur if heat is removed from water that is in a subcooled condition?

A. Temperature of the water will increase.

B. Enthalpy of the water will decrease.

C. Quality of the water will increase.

D. Density of the water will decrease.

ANSWER: B.

TOPIC: 293003
KNOWLEDGE: K1.16 [2.8/2.8]
QID: B2973 (P2975)

An open vessel contains 1.0 lbm of water at 206°F and standard atmospheric pressure. Which one of the following will be caused by the addition of 3.0 Btu to the water?

A. The water temperature will rise by approximately 3°F.

B. Approximately 3 percent of the water mass will vaporize.

C. The water density will decrease by approximately 3 percent.

D. The water will become superheated by approximately 3°F.

ANSWER: A.

TOPIC: 293003
KNOWLEDGE: K1.22 [2.9/3.2]
QID: B1175 (P1675)

Which one of the following is the approximate temperature of a saturated steam-water mixture that has an enthalpy of 1,150 Btu/lbm and a quality of 95 percent?

A. 220°F

B. 270°F

C. 360°F

D. 440°F

ANSWER: C.

TOPIC: 293003
KNOWLEDGE: K1.22 [2.9/3.2]
QID: B1377

Dry saturated steam undergoes an ideal expansion process in an ideal turbine from 1,000 psia to 28 inches Hg vacuum. Approximately how much specific work is being performed by the turbine?

A. 1,193 Btu/lbm

B. 775 Btu/lbm

C. 418 Btu/lbm

D. 357 Btu/lbm

ANSWER: C.

TOPIC: 293003
KNOWLEDGE: K1.22 [2.9/3.2]
QID: B1577

Dry saturated steam undergoes an ideal expansion process in an ideal turbine from 294 psig to 27 inches Hg vacuum. Approximately how much specific work is being performed by the turbine?

A. 1,203 Btu/lbm

B. 418 Btu/lbm

C. 343 Btu/lbm

D. 308 Btu/lbm

ANSWER: C.

TOPIC: 293003
KNOWLEDGE: K1.22 [2.9/3.2]
QID: B1675

Which one of the following is the approximate reactor coolant heatup rate if reactor vessel pressure increases from 470 psig to 980 psig over a two-hour period?

A. 40°F/hr

B. 60°F/hr

C. 80°F/hr

D. 120°F/hr

ANSWER: A.

TOPIC: 293003
KNOWLEDGE: K1.22 [2.9/3.2]
QID: B6038 (P6039)

Given a set of steam tables that lists the following parameters for saturated steam and water:

- Pressure
- Enthalpy
- Specific volume
- Entropy
- Temperature

One can determine the _____ of a saturated steam-water mixture given only the _____.

A. temperature; enthalpy

B. temperature; pressure

C. pressure; entropy

D. pressure; specific volume

ANSWER: B.

TOPIC: 293003
KNOWLEDGE: K1.23 [2.8/3.1]
QID: B75

The saturation pressure corresponding to 400°F is approximately...

A. 232 psia.

B. 247 psia.

C. 262 psia.

D. 444 psia.

ANSWER: B.

TOPIC: 293003
KNOWLEDGE: K1.23 [2.8/3.1]
QID: B103

An operator suspects that a steam line temperature instrument reading is not correct. A recently calibrated pressure gauge sensing steam pressure for the same steam line indicates 351 psig.

Assuming the system is operating at saturation pressure, what approximate temperature should the temperature instrument indicate?

A. 424°F

B. 428°F

C. 432°F

D. 436°F

ANSWER: D.

TOPIC: 293003
KNOWLEDGE: K1.23 [2.8/3.1]
QID: B139

The saturation temperature for steam at a pressure of 785 psig is approximately...

A. 510°F.

B. 513°F.

C. 515°F.

D. 518°F.

ANSWER: D.

TOPIC: 293003
KNOWLEDGE: K1.23 [2.8/3.1]
QID: B190

Which one of the following is the approximate quality of steam leaving a cyclone separator at 985 psig and 1,186 Btu/lbm?

A. 95 percent

B. 96 percent

C. 97 percent

D. 99 percent

ANSWER: D.

TOPIC: 293003
KNOWLEDGE: K1.23 [2.8/3.1]
QID: B275 (P275)

The saturation pressure for water at 328°F is approximately...

A. 85 psig.

B. 100 psig.

C. 115 psig.

D. 130 psig.

ANSWER: A.

TOPIC: 293003
KNOWLEDGE: K1.23 [2.8/3.1]
QID: B375

Dry saturated steam at 250 psia enters turbine X. Superheated steam at 250 psia and 500°F enters turbine Y. Both turbines are 100 percent efficient and exhaust to a condenser at 1 psia.

Which one of the following lists the approximate percentages of moisture at the exhausts of turbines X and Y?

A. Turbine X = 24.5%; turbine Y = 20.8%

B. Turbine X = 26.3%; turbine Y = 13.0%

C. Turbine X = 24.5%; turbine Y = 13.0%

D. Turbine X = 26.3%; turbine Y = 20.8%

ANSWER: A.

TOPIC: 293003
KNOWLEDGE: K1.23 [2.8/3.1]
QID: B382

Cooling water exits a fuel channel with an enthalpy of 1,195 Btu/lbm at a reactor pressure of 1,050 psig. What is the state of the fluid at the exit of the fuel channel?

A. Saturated

B. Superheated

C. Compressed

D. Subcooled

ANSWER: B.

TOPIC: 293003
KNOWLEDGE: K1.23 [2.8/3.1]
QID: B974

Which one of the following sets of parameters for a saturated steam-water mixture will result in the highest quality?

A. 500°F; 1,100 Btu/lbm

B. 320°F; 1,070 Btu/lbm

C. 200°F; 1,040 Btu/lbm

D. 160°F; 960 Btu/lbm

ANSWER: C.

TOPIC: 293003
KNOWLEDGE: K1.23 [2.8/3.1]
QID: B975

Which one of the following is the enthalpy of steam at 235.3 psig and 500°F?

A. 1,201.1 Btu/lbm

B. 1,202.2 Btu/lbm

C. 1,263.5 Btu/lbm

D. 1,286.6 Btu/lbm

ANSWER: C.

TOPIC: 293003
KNOWLEDGE: K1.23 [2.8/3.1]
QID: B1375

A steam-water mixture leaving a reactor core has the following parameter values:

Temperature = 550.5°F
Pressure = 1,035 psig
Quality = 14.5 percent

Which one of the following is the approximate enthalpy of the steam-water mixture?

A. 610 Btu/lbm

B. 643 Btu/lbm

C. 720 Btu/lbm

D. 860 Btu/lbm

ANSWER: B.

TOPIC: 293003
KNOWLEDGE: K1.23 [2.8/3.1]
QID: B1575

A steam-water mixture leaving the reactor core has the following parameter values:

Temperature = 550.5°F
Pressure = 1,035 psig
Quality = 20 percent

Which one of the following is the approximate enthalpy of the steam-water mixture?

A. 641 Btu/lbm

B. 678 Btu/lbm

C. 751 Btu/lbm

D. 1,063 Btu/lbm

ANSWER: B.

TOPIC: 293003
KNOWLEDGE: K1.23 [2.8/3.1]
QID: B1776 (P1775)

What is the approximate amount of heat required to convert 3.0 lbm of water at 100°F and 100 psia to dry saturated steam at 100 psia?

A. 889 Btu

B. 1,119 Btu

C. 2,666 Btu

D. 3,358 Btu

ANSWER: D.

TOPIC: 293003
KNOWLEDGE: K1.23 [2.8/3.1]
QID: B2075 (P2077)

A nuclear power plant is operating with the following main steam parameters at the main turbine steam inlet valves:

Pressure = 900 psia
Quality = 98 percent

The main turbine steam chest pressure is 400 psia. Assuming an ideal throttling process, what is the quality of the steam in the steam chest?

A. 97 percent

B. 98 percent

C. 99 percent

D. 100 percent

ANSWER: A.

TOPIC: 293003
KNOWLEDGE: K1.23 [2.8/3.1]
QID: B2275 (P2275)

A saturated steam-water mixture with a quality of 30 percent leaves a main turbine at 1.0×10^6 lbm/hr and enters a steam condenser at 2.0 psia. Condensate enters the hotwell at 118°F.

Which one of the following is the approximate condenser heat transfer rate?

A. 3.1×10^8 Btu/hr

B. 5.8×10^8 Btu/hr

C. 7.2×10^8 Btu/hr

D. 9.9×10^8 Btu/hr

ANSWER: A.

TOPIC: 293003
KNOWLEDGE: K1.23 [2.8/3.1]
QID: B2374 (P2375)

Which one of the following is the approximate amount of heat required to convert 2.0 lbm of water at 100°F and 100 psia to dry saturated steam at 100 psia?

A. 1,119 Btu

B. 1,187 Btu

C. 2,238 Btu

D. 2,374 Btu

ANSWER: C.

TOPIC: 293003
KNOWLEDGE: K1.23 [2.8/3.1]
QID: B2474

Turbine X is an ideal steam turbine that exhausts to a condenser at 1.0 psia. Turbine X is driven by dry saturated steam at 500 psia. Which one of the following lists the approximate specific work output of turbine X and the moisture content of the steam exiting turbine X?

	Specific Work	Moisture Content
A.	388 Btu/lbm	72%
B.	388 Btu/lbm	28%
C.	817 Btu/lbm	72%
D.	817 Btu/lbm	28%

ANSWER: B.

TOPIC: 293003
KNOWLEDGE: K1.23 [2.8/3.1]
QID: B2475 (P2475)

A steam line is carrying steam at 500 psia and 507°F. Approximately how much specific ambient heat loss is required before moisture formation can occur in the steam line?

A. 31 Btu/lbm

B. 45 Btu/lbm

C. 58 Btu/lbm

D. 71 Btu/lbm

ANSWER: A

TOPIC: 293003
KNOWLEDGE: K1.23 [2.8/3.1]
QID: B2575 (P2575)

Which one of the following is the approximate amount of heat required to convert 2.0 lbm of water at 100°F and 100 psia to superheated steam at 400°F and 100 psia?

A. 1,119 Btu

B. 1,159 Btu

C. 2,239 Btu

D. 2,319 Btu

ANSWER: D.

TOPIC: 293003
KNOWLEDGE: K1.23 [2.8/3.1]
QID: B2675 (P2675)

What is the approximate specific heat (Btu/lbm-°F) of water at 300°F and 100 psia?

A. 1.03 Btu/lbm-°F

B. 1.11 Btu/lbm-°F

C. 1.17 Btu/lbm-°F

D. 1.25 Btu/lbm-°F

ANSWER: A.

TOPIC: 293003
KNOWLEDGE: K1.23 [2.8/3.1]
QID: B2774 (P2778)

The theoretical maximum efficiency of a steam cycle is given by the equation:

$$Eff_{max} = (1 - T_{out}/T_{in}) \times 100\%$$

where T_{out} is the absolute temperature for heat rejection and T_{in} is the absolute temperature for heat addition. (Fahrenheit temperature is converted to absolute temperature by adding 460°F.)

A nuclear power plant is operating with a stable reactor vessel pressure of 900 psia. What is the approximate theoretical maximum steam cycle efficiency this plant can achieve by establishing its main condenser vacuum at 1.0 psia?

A. 35 percent

B. 43 percent

C. 65 percent

D. 81 percent

ANSWER: B.

TOPIC: 293003
KNOWLEDGE: K1.23 [2.8/3.1]
QID: B2776 (P2775)

With a nuclear power plant operating near rated power, air inleakage into the main condenser causes main condenser pressure to increase from 1.0 psia to 2.0 psia.

Given the following:

- Initial main condenser condensate depression was 4°F.
- After the plant stabilizes, main condenser condensate depression is 2°F with main condenser pressure at 2.0 psia.

Which one of the following is the approximate increase in main condenser specific heat rejection needed to restore condensate depression to 4°F?

A. 2 Btu/lbm

B. 4 Btu/lbm

C. 8 Btu/lbm

D. 16 Btu/lbm

ANSWER: A.

TOPIC: 293003
KNOWLEDGE: K1.23 [2.8/3.1]
QID: B2875

A nuclear power plant is operating at a low power level. Main steam at the main turbine steam inlet valves has the following properties:

Pressure = 900 psia
Quality = 99 percent

The main turbine steam chest pressure is 300 psia. Which one of the following is the approximate temperature of the steam in the steam chest?

A. 417°F

B. 439°F

C. 496°F

D. 532°F

ANSWER: A.

TOPIC: 293003
KNOWLEDGE: K1.23 [2.8/3.1]
QID: B3074 (P3077)

A nuclear power plant is operating at 100 percent power. Steam is escaping to atmosphere through a flange leak in a steam supply line to the low pressure section of the main turbine.

Given:

- Steam line pressure is 300 psia.
- Steam line steam temperature is 440°F.

What is the approximate temperature of the steam as it reaches standard atmospheric pressure?

A. 212°F

B. 268°F

C. 322°F

D. 358°F

ANSWER: D.

TOPIC: 293003
KNOWLEDGE: K1.23 [2.8/3.1]
QID: B3175 (P3175)

A steam line is carrying dry saturated steam at 500 psia. Approximately how much heat addition to the steam is necessary to achieve 60°F of superheat?

A. 31 Btu/lbm

B. 45 Btu/lbm

C. 58 Btu/lbm

D. 71 Btu/lbm

ANSWER: B.

TOPIC: 293003
KNOWLEDGE: K1.23 [2.8/3.1]
QID: B3274 (P3275)

An ideal main turbine generator (MTG) is producing 1,000 MW of electrical power while being supplied with 100 percent quality steam at 920 psig. Steam supply pressure is then gradually increased to 980 psig at the same quality. Assume turbine control valve position and condenser vacuum remain the same.

Which one of the following describes why the MTG output increases as steam pressure increases?

A. Each lbm of steam entering the turbine has a higher specific heat.

B. Each lbm of steam entering the turbine has a higher specific enthalpy.

C. Each lbm of steam passing through the turbine expands to fill a greater volume.

D. Each lbm of steam passing through the turbine performs increased work in the turbine.

ANSWER: D.

TOPIC: 293003
KNOWLEDGE: K1.23 [2.8/3.1]
QID: B3275

A nuclear power plant is shutdown at normal operating temperatures and pressures. Reactor coolant temperature is being controlled by dumping main steam (100 percent quality) to the main condenser.

Given the following:

- Main steam pressure is 1,000 psia.
- Main condenser vacuum is 28"Hg.

Which one of the following is the approximate temperature of the steam as it enters the main condenser?

A. 102°F

B. 212°F

C. 295°F

D. 358°F

ANSWER: C.

TOPIC: 293003
KNOWLEDGE: K1.23 [2.8/3.1]
QID: B3475 (P3475)

Which one of the following is the approximate amount of heat required to convert 2.0 lbm of water at 100°F and 100 psia to dry saturated steam at 100 psia?

A. 560 Btu

B. 1,120 Btu

C. 2,238 Btu

D. 3,356 Btu

ANSWER: C.

TOPIC: 293003
KNOWLEDGE: K1.23 [2.8/3.1]
QID: B3575 (P3577)

Dry saturated steam at 1,000 psia is being supplied to the inlet of a partially open steam throttle valve on a main turbine. Pressure in the steam chest downstream of the throttle valve is 150 psia. Assume a typical throttling process with no heat gain or loss to/from the steam.

When compared to the conditions at the inlet to the throttle valve, which one of the following describes the conditions in the steam chest for specific enthalpy and specific entropy?

	Steam Chest Specific Enthalpy	Steam Chest Specific Entropy
A.	About the same	About the same
B.	About the same	Significantly higher
C.	Significantly lower	About the same
D.	Significantly lower	Significantly higher

ANSWER: B.

TOPIC: 293003
KNOWLEDGE: K1.23 [2.8/3.1]
QID: B3675 (P3677)

A nuclear power plant is shut down and steam is escaping to atmosphere through a leak in a main steam line. The main steam line contains dry saturated steam at 300 psia. What is the approximate temperature of the steam as it reaches standard atmospheric pressure?

A. 212°F

B. 268°F

C. 322°F

D. 358°F

ANSWER: C.

TOPIC: 293003
KNOWLEDGE: K1.23 [2.8/3.1]
QID: B3774 (P3775)

A 100 ft^3 vessel contains a saturated steam-water mixture at 1,000 psia. The water portion occupies 30 ft^3 and the steam portion occupies the remaining 70 ft^3. What is the approximate total mass of the mixture in the vessel?

A. 1,547 lbm

B. 2,612 lbm

C. 3,310 lbm

D. 4,245 lbm

ANSWER: A.

TOPIC: 293003
KNOWLEDGE: K1.23 [2.8/3.1]
QID: B3938 (P3939)

Main steam is being used to reheat high pressure (HP) turbine exhaust in a moisture separator-reheater (MSR).

Given:

- The HP turbine exhaust enters the MSR reheater section as dry saturated steam.
- The exhaust enters and exits the reheater section at 280 psia and a flow rate of 1.0E6 lbm/hr.
- The main steam heat transfer rate in the reheater section is 42.1E6 Btu/hr.

Which one of the following is the approximate temperature of the HP turbine exhaust leaving the reheater section of the MSR?

A. 450°F

B. 475°F

C. 500°F

D. 525°F

ANSWER: B.

TOPIC: 293003
KNOWLEDGE: K1.23 [2.8/3.1]
QID: B4038

A 100 ft^3 vessel contains a saturated steam-water mixture at 1,000 psia. The water portion occupies 70 ft^3 and the steam portion occupies the remaining 30 ft^3. What is the approximate total mass of the mixture in the vessel?

A. 1,547 lbm

B. 2,612 lbm

C. 3,310 lbm

D. 4,245 lbm

ANSWER: C.

TOPIC: 293003
KNOWLEDGE: K1.23 [2.8/3.1]
QID: B4138 (P4139)

A saturated steam-water mixture at 50 percent quality is leaving a main turbine at 1.0×10^6 lbm/hr and entering a condenser at 1.6 psia. Condensate enters the hotwell at 112°F.

Which one of the following is the approximate condenser heat transfer rate?

A. 3.1×10^8 Btu/hr

B. 3.8×10^8 Btu/hr

C. 4.5×10^8 Btu/hr

D. 5.2×10^8 Btu/hr

ANSWER: D.

TOPIC: 293003
KNOWLEDGE: K1.23 [2.8/3.1]
QID: B4338 (P4339)

A nuclear power plant is operating at 100 percent power. The main turbine has one high pressure (HP) unit and one low pressure (LP) unit.

Main steam enters the HP unit of the main turbine with the following parameters:

Pressure = 1,000 psia
Quality = 100 percent

The exhaust steam exits the HP unit at 200 psia, then goes through a moisture separator-reheater, and enters the LP units with the following parameters:

Pressure = 200 psia
Temperature = 500°F

The main condenser pressure is 1.0 psia. Assume that each unit of the main turbine is 100 percent efficient.

The higher enthalpy steam is being supplied to the _____ unit of the main turbine; and the greater moisture content is found in the exhaust of the _____ unit.

A. LP; LP

B. LP; HP

C. HP; LP

D. HP; HP

ANSWER: A.

TOPIC: 293003
KNOWLEDGE: K1.23 [2.8/3.1]
QID: B4738 (P4739)

Consider a 100 lbm quantity of a saturated steam-water mixture at standard atmospheric pressure. The mixture has a quality of 70 percent. Assume that pressure remains constant and there is no heat loss from the mixture.

Which one of the following is the approximate heat addition needed to increase the quality of the mixture to 100 percent?

A. 5,400 Btu

B. 12,600 Btu

C. 29,100 Btu

D. 67,900 Btu

ANSWER: C.

TOPIC: 293003
KNOWLEDGE: K1.23 [2.8/3.1]
QID: B4838 (P4839)

An open vessel contains 1.0 lbm-mass of water at 204°F and standard atmospheric pressure. If 16.0 Btu of heat is added to the water, the water temperature will rise by about _____; and approximately _____ of the water mass will become steam.

A. 8°F; 1 percent

B. 8°F; 10 percent

C. 16°F; 1 percent

D. 16°F; 10 percent

ANSWER: A.

TOPIC: 293003
KNOWLEDGE: K1.23 [2.8/3.1]
QID: B4938 (P4939)

Water enters an ideal convergent-divergent nozzle with the following parameters:

Pressure = 300 psia
Temperature = 102°F
Velocity = 50 ft/sec

The velocity of the water at the throat of the nozzle is 200 ft/sec.

Given that nozzles convert enthalpy to kinetic energy, and assuming no heat transfer to or from the nozzle, what is the approximate pressure of the water at the throat of the nozzle?

A. 296 psia

B. 150 psia

C. 75 psia

D. 50 psia

ANSWER: D.

TOPIC: 293003
KNOWLEDGE: K1.23 [2.8/3.1]
QID: B5038 (P5039)

An open vessel contains 1.0 lbm of water at 206°F and standard atmospheric pressure. Which one of the following will be caused by the addition of 12.0 Btu to the water?

A. The water temperature will rise by about 6°F and none of the water will vaporize.

B. The water temperature will rise by about 6°F and some of the water will vaporize.

C. The water temperature will rise by about 12°F and none of the water will vaporize.

D. The water temperature will rise by about 12°F and some of the water will vaporize.

ANSWER: B.

TOPIC: 293003
KNOWLEDGE: K1.23 [2.8/3.1]
QID: B5138 (P5139)

A feedwater pump discharges into a 16-inch diameter discharge line. Given the following:

Pump discharge pressure = 950 psia
Feedwater temperature = 300°F
Feedwater velocity = 15.2 ft/sec

What is the feedwater pump discharge mass flow rate?

A. 1.1×10^6 lbm/hr

B. 4.4×10^6 lbm/hr

C. 1.8×10^7 lbm/hr

D. 5.3×10^7 lbm/hr

ANSWER: B.

TOPIC: 293003
KNOWLEDGE: K1.23 [2.8/3.1]
QID: B5238 (P5239)

Dry saturated steam enters a frictionless convergent-divergent nozzle with the following parameters:

Pressure = 850 psia
Velocity = 10 ft/sec

The steam at the throat of the nozzle has a subsonic velocity of 950 ft/sec.

Given that nozzles convert enthalpy to kinetic energy, and assuming no heat transfer to or from the nozzle, what is the enthalpy of the steam at the throat of the nozzle?

A. 1,162 Btu/lbm

B. 1,171 Btu/lbm

C. 1,180 Btu/lbm

D. 1,189 Btu/lbm

ANSWER: C.

TOPIC: 293003
KNOWLEDGE: K1.23 [2.8/3.1]
QID: B5338 (P5340)

A nuclear power plant is operating with the following main steam parameters at the main turbine steam inlet valves:

Pressure = 900 psia
Quality = 99 percent

The main turbine steam chest pressure is 300 psia. Assuming an ideal throttling process, what is the quality of the steam in the steam chest?

A. 100 percent

B. 98 percent

C. 88 percent

D. 87 percent

ANSWER: B.

TOPIC: 293003
KNOWLEDGE: K1.23
QID: B5438 (P5439)

An ideal auxiliary steam turbine exhausts to the atmosphere. The steam turbine is supplied with dry saturated steam at 900 psia. Which one of the following is the maximum specific work (Btu/lbm) that can be extracted from the steam by the steam turbine?

A. 283 Btu/lbm

B. 670 Btu/lbm

C. 913 Btu/lbm

D. 1,196 Btu/lbm

ANSWER: A.

TOPIC: 293003
KNOWLEDGE: K1.23 [2.8/3.1]
QID: B5638

A main steam line safety valve is leaking by, allowing 100 percent quality steam from the reactor vessel to enter the discharge pipe, which remains at a constant pressure of 10 psig. Initial safety valve discharge pipe temperature is elevated but stable. Assume no heat loss from the safety valve discharge pipe.

When the leak is noted, the reactor is shut down and a plant cooldown and depressurization are commenced. As the main steam pressure slowly decreases from 1,000 psig to 800 psig, the safety valve discharge pipe temperature will...

A. decrease, because the entropy of the safety valve discharge will be decreasing.

B. decrease, because the enthalpy of the safety valve discharge will be decreasing.

C. increase, because the safety valve discharge will become more superheated as reactor vessel pressure decreases.

D. remain the same, because the safety valve discharge will remain a saturated steam-water mixture at 10 psig.

ANSWER: C.

TOPIC: 293003
KNOWLEDGE: K1.23 [2.8/3.1]
QID: B5738 (P5739)

A steam turbine exhausts to a steam condenser at 1.0 psia. The steam turbine is supplied with dry saturated steam at 900 psia at a flow rate of 200,000 lbm/hr. What is the approximate rate of condensate addition to the condenser hotwell in gallons per minute?

A. 400 gpm

B. 2,400 gpm

C. 4,000 gpm

D. 24,000 gpm

ANSWER: A.

TOPIC: 293003
KNOWLEDGE: K1.23 [2.8/3.1]
QID: B5938

What happens to the enthalpy of the saturated steam in a reactor vessel (RV) during a reactor heatup as RV pressure increases from 100 psia to 1,000 psia?

A. The enthalpy increases during the entire pressure increase.

B. The enthalpy initially increases and then decreases.

C. The enthalpy decreases during the entire pressure increase.

D. The enthalpy initially decreases and then increases.

ANSWER: B.

TOPIC: 293003
KNOWLEDGE: K1.23 [2.8/3.1]
QID: B6338 (P6339)

Dry saturated steam is flowing to a reheater. The reheater inlet and outlet pressures are both 260 psia. If the reheater adds 60.5 Btu/lbm to the steam, what is the temperature of the steam exiting the reheater?

A. 405°F

B. 450°F

C. 465°F

D. 500°F

ANSWER: D.

TOPIC: 293003
KNOWLEDGE: K1.23 [2.8/3.1]
QID: B6438 (P6439)

An open vessel contains 5.0 lbm of water at constant standard atmospheric pressure. The water has been heated to the saturation temperature. If an additional 1,600 Btu is added to the water, the water temperature will _____, and _____ than 50 percent of the water will vaporize.

A. increase significantly; less

B. increase significantly; more

C. remain about the same; less

D. remain about the same; more

ANSWER: C.

TOPIC: 293003
KNOWLEDGE: K1.23 [2.8/3.1]
QID: B6538 (P6540)

A nuclear power plant is operating at power. Steam is escaping to atmosphere through a flange leak in a steam line supplying the low pressure section of the main turbine.

Given:

- Steam line pressure is 200 psia.
- Steam line temperature is 400°F.

Assuming no heat transfer to/from the steam, what is the approximate temperature of the steam as it reaches atmospheric pressure?

A. 212°F

B. 284°F

C. 339°F

D. 375°F

ANSWER: C.

TOPIC: 293003
KNOWLEDGE: K1.23 [2.8/3.1]
QID: B6638 (P6639)

Dry saturated steam at 240 psia enters an ideal low pressure (LP) turbine and exhausts to a steam condenser at 1.0 psia. Compared to the LP turbine entry conditions, the volumetric flow rate of the steam leaving the LP turbine will be about _____ times larger.

A. 103

B. 132

C. 174

D. 240

ANSWER: B.

TOPIC: 293003
KNOWLEDGE: K1.23 [2.8/3.1]
QID: B6938 (P6939)

A nuclear power plant experienced a loss of all AC electrical power due to a natural disaster. A few days later, there is turbulent boiling in the spent fuel pool. Average spent fuel temperature is elevated but stable. Assume that boiling is the only means of heat removal from the spent fuel pool.

Given the following stable current conditions:

Spent fuel decay heat rate = 4.8 MW
Spent fuel building pressure = 14.7 psia
Spent fuel pool temperature = 212°F

At what approximate rate is the mass of water in the spent fuel pool decreasing?

A. 4,170 lbm/hr

B. 4,950 lbm/hr

C. 14,230 lbm/hr

D. 16,870 lbm/hr

ANSWER: D.

TOPIC: 293003
KNOWLEDGE: K1.23 [2.8/3.1]
QID: B7038 (P7039)

Given the following initial conditions for a spent fuel pool:

Spent fuel decay heat rate	=	5.0 MW
Spent fuel pool water temperature	=	90°F
Spent fuel pool water mass	=	2.5×10^6 lbm
Spent fuel pool water specific heat	=	1.0 Btu/lbm-°F

If a complete loss of spent fuel pool cooling occurs, how long will it take for spent fuel pool water temperature to reach 212°F? (Assume that the spent fuel pool remains in thermal equilibrium, and that there is no heat removal from the spent fuel pool.)

A. 18 hours

B. 31 hours

C. 48 hours

D. 61 hours

ANSWER: A.

TOPIC: 293003
KNOWLEDGE: K1.23 [2.8/3.1]
QID: B7138 (P7140)

A nuclear power plant is operating with the following main steam parameters at the main turbine steam inlet valves:

Pressure = 1,050 psia
Quality = 100 percent

The main turbine steam chest pressure is 400 psia. Assuming an ideal throttling process, which one of the following describes the steam in the steam chest?

A. Saturated, 96 percent quality

B. Saturated, 98 percent quality

C. Saturated, 100 percent quality

D. Superheated

ANSWER: B.

TOPIC: 293003
KNOWLEDGE: K1.23 [2.8/3.1]
QID: B7238 (P7239)

An open vessel contains 1.0 lbm of water at 120°F and standard atmospheric pressure. Which one of the following will be caused by the addition of 540 Btu to the water?

A. The water temperature will increase to approximately 212°F; and less than 50 percent of the water will vaporize.

B. The water temperature will increase to approximately 212°F; and more than 50 percent of the water will vaporize.

C. The water temperature will increase to significantly higher than 212°F; and less than 50 percent of the water will vaporize.

D. The water temperature will increase to significantly higher than 212°F; and more than 50 percent of the water will vaporize.

ANSWER: A.

TOPIC: 293003
KNOWLEDGE: K1.23 [2.8/3.1]
QID: B7338 (P7339)

Dry saturated steam at 1,000 psia enters an ideal high pressure (HP) turbine and exhausts at 100 psia. The HP turbine exhaust then enters an ideal low pressure (LP) turbine and exhausts to a steam condenser at 1.5 psia. Which one of the following will cause the HP and LP turbines to produce more equal power? (Assume all pressures remain the same unless stated otherwise.)

A. Reheat the HP turbine exhaust.

B. Lower the steam condenser pressure.

C. Remove the moisture from the HP turbine exhaust.

D. Decrease the pressure of the dry saturated steam entering the HP turbine.

ANSWER: C.

TOPIC: 293003
KNOWLEDGE: K1.23 [2.8/3.1]
QID: B7438

A nuclear power plant experienced a reactor scram. One hour after the scram, core cooling is being accomplished by relieving dry saturated steam from the reactor vessel (RV). Water level in the RV is being maintained by an operating feedwater pump. Average fuel temperature is stable.

Given the following current conditions:

Core decay heat rate	=	33 MW
RV pressure	=	1,000 psia
Feedwater temperature	=	90°F

For the above conditions, approximately what feedwater flow rate is needed to maintain a constant mass of water in the RV?

A. 100,000 lbm/hr

B. 125,000 lbm/hr

C. 170,000 lbm/hr

D. 215,000 lbm/hr

ANSWER: A.

TOPIC: 293003
KNOWLEDGE: K1.23 [2.8/3.1]
QID: B7538 (P7539)

Subcooled water is flowing through a heat exchanger with the following parameters:

Inlet temperature = 75°F
Outlet temperature = 120°F
Mass flow rate = 6.0×10^4 lbm/hr

What is the approximate heat transfer rate in the heat exchanger?

A. 1.1×10^6 Btu/hr

B. 2.1×10^6 Btu/hr

C. 2.7×10^6 Btu/hr

D. 3.3×10^6 Btu/hr

ANSWER: C.

TOPIC: 293003
KNOWLEDGE: K1.23 [2.8/3.1]
QID: B7619 (P7619)

A nuclear power plant is operating with the following main steam parameters at a partially open main turbine steam inlet valve:

Pressure = 1,000 psia
Quality = 100 percent

The main turbine steam chest pressure is 50 psia. Which one of the following describes the steam in the steam chest?

A. Saturated, 98 percent quality

B. Saturated, 99 percent quality

C. Saturated, 100 percent quality

D. Superheated

ANSWER: D.

TOPIC: 293003
KNOWLEDGE: K1.23 [2.8/3.1]
QID: B7629 (P7629)

An open vessel contains 2.0 lbm of water at 200°F and standard atmospheric pressure. Which one of the following will be caused by the addition of 16.0 Btu to the water?

A. The water temperature will increase, and all of the water will boil off.

B. The water temperature will increase, and none of the water will boil off.

C. The water temperature will rise to 212°F, and some of the water will boil off.

D. The water temperature will rise to 216°F and some of the water will boil off.

ANSWER: B.

TOPIC: 293003
KNOWLEDGE: K1.23 [2.8/3.1]
QID: B7659 (P7659)

Dry saturated steam at 900 psia enters an ideal high pressure (HP) turbine and exhausts at 240 psia. How much heat, if any, must be added to the HP turbine exhaust to produce dry saturated steam at 240 psia?

A. 0 Btu/lbm

B. 11 Btu/lbm

C. 111 Btu/lbm

D. 155 Btu/lbm

ANSWER: C.

TOPIC: 293003
KNOWLEDGE: K1.23 [2.8/3.1]
QID: B7679 (P7679)

Dry saturated steam enters a turbine at 1000 psia with the turbine exhaust pressure at 2 psia. The efficiency of the turbine is 85 percent. What is the approximate specific work output of the turbine?

A. 329 Btu/lbm

B. 355 Btu/lbm

C. 387 Btu/lbm

D. 455 Btu/lbm

ANSWER: A.

TOPIC: 293003
KNOWLEDGE: K1.23 [2.8/3.1]
QID: B7689 (P3277)

A nuclear power plant is operating at 100 percent power. Steam is escaping to atmosphere through a flange leak in a steam line that supplies the low pressure unit of the main turbine.

Given:

- Steam line pressure is 280 psia.
- Steam line steam temperature is 450°F.

What is the approximate temperature of the steam as it reaches standard atmospheric pressure?

A. 212°F

B. 268°F

C. 322°F

D. 378°F

ANSWER: D.

TOPIC: 293003
KNOWLEDGE: K1.23 [2.8/3.1]
QID: B7699 (P7699)

Saturated steam at 900 psia enters a high pressure (HP) turbine and exhausts at 200 psia. The HP turbine exhaust passes through a 100 percent efficient moisture separator (with no heat gain or loss) before it enters a low pressure (LP) turbine. What is the enthalpy of the 200 psia steam entering the LP turbine?

A. 1,028 Btu/lbm

B. 1,076 Btu/lbm

C. 1,107 Btu/lbm

D. 1,199 Btu/lbm

ANSWER: D.

TOPIC: 293004
KNOWLEDGE: K1.04 [2.5/2.6]
QID: B76

Refer to the drawing of a steam-jet air ejector (see figure below) in normal operation with supersonic steam velocities.

At which one of the following locations is the lowest pressure experienced?

A. 1

B. 2

C. 3

D. 4

ANSWER: B.

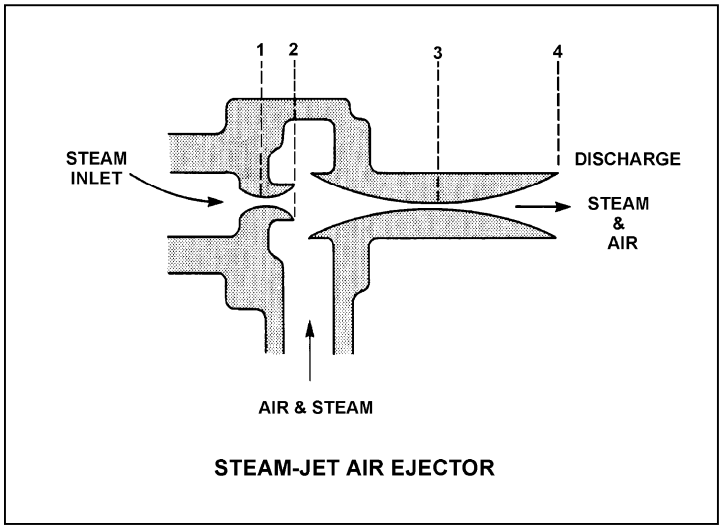

TOPIC: 293004
KNOWLEDGE: K1.04 [2.5/2.6]
QID: B376

Refer to the drawing of a steam-jet air ejector (see figure below) in normal operation with steam reaching supersonic velocities.

Steam flowing from D to E undergoes a pressure _____ and a velocity _____.

A. decrease; decrease

B. decrease; increase

C. increase; increase

D. increase; decrease

ANSWER: D.

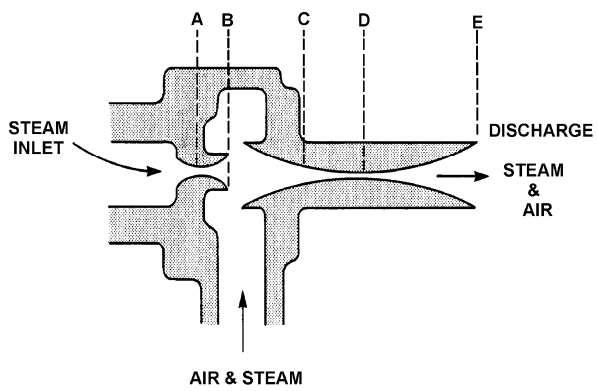

STEAM-JET AIR EJECTOR

TOPIC: 293004
KNOWLEDGE: K1.04 [2.5/2.6]
QID: B476

Refer to the drawing of a steam-jet air ejector (see figure below) in normal operation.

The section of the air ejector that converts steam pressure into kinetic energy is called the...

A. diffuser.

B. nozzle.

C. intercondenser.

D. riser.

ANSWER: B.

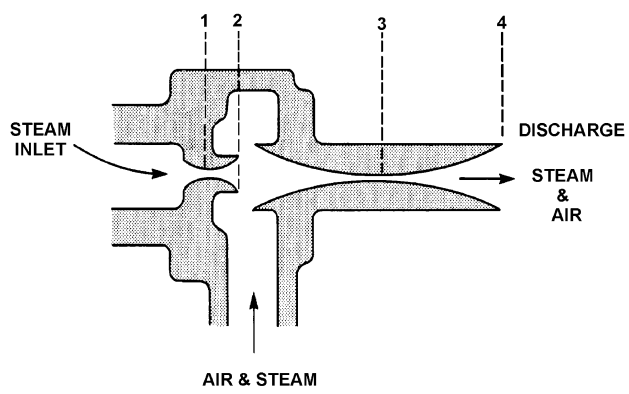

STEAM-JET AIR EJECTOR

TOPIC: 293004
KNOWLEDGE: K1.04 [2.5/2.6]
QID: B1276

The steam inlet nozzles used in steam jet air ejectors convert the _____ of the steam into _____.

A. kinetic energy; pressure

B. enthalpy; kinetic energy

C. kinetic energy; velocity

D. enthalpy; pressure

ANSWER: B.

TOPIC: 293004
KNOWLEDGE: K1.04 [2.5/2.6]
QID: B1476

Steam entering an air ejector reaches sonic velocity in the throat of a convergent-divergent nozzle. Upon entering the divergent section of the nozzle, steam velocity will _____ and steam pressure will _____.

A. increase; increase

B. increase; decrease

C. decrease; increase

D. decrease; decrease

ANSWER: B.

TOPIC: 293004
KNOWLEDGE: K1.04 [2.5/2.6]
QID: B1775

Refer to the drawing of a steam-jet air ejector (see figure below) in normal operation with supersonic steam velocities.

Steam flowing from 1 to 2 undergoes a pressure _____ and a velocity _____.

A. increase; decrease

B. increase; increase

C. decrease; decrease

D. decrease; increase

ANSWER: D.

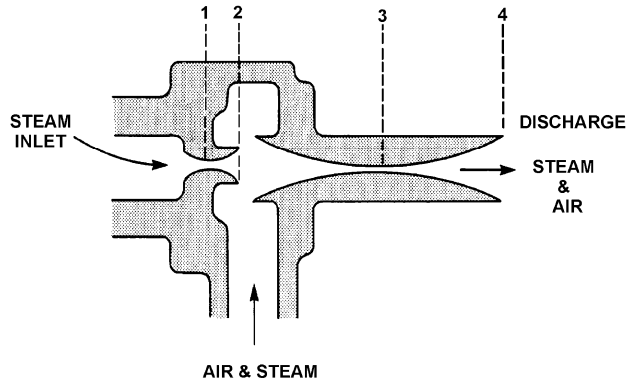

STEAM-JET AIR EJECTOR

TOPIC: 293004
KNOWLEDGE: K1.04 [2.5/2.6]
QID: B3476

Refer to the drawing of a steam-jet air ejector (see figure below) in normal operation with the steam attaining supersonic velocity.

Steam flowing from C to D undergoes a pressure _____ and a velocity _____.

A. decrease; decrease

B. decrease; increase

C. increase; increase

D. increase; decrease

ANSWER: D.

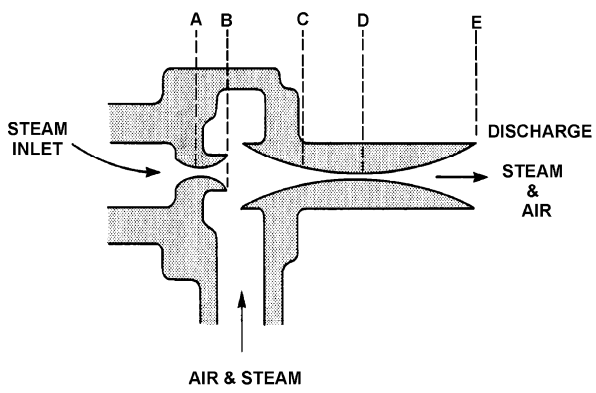

STEAM-JET AIR EJECTOR

TOPIC: 293004
KNOWLEDGE: K1.05 [2.7/2.7]
QID: B276

During jet pump operation, high pressure and low velocity fluid flow is supplied to a _____ where the velocity increases and the pressure drops to create a low pressure area in the _____.

A. nozzle; throat

B. nozzle; diffuser

C. diffuser; throat

D. diffuser; nozzle

ANSWER: A.

TOPIC: 293004
KNOWLEDGE: K1.05 [2.7/2.7]
QID: B1076

The <u>lowest</u> pressure in a liquid jet pump exists in the...

A. throat.

B. diffuser.

C. rams head.

D. impeller eye.

ANSWER: A.

TOPIC: 293004
KNOWLEDGE: K1.12 [2.9/3.1]
QID: B77

Condensate depression (subcooling) will increase if the _____ increases.

A. main turbine load

B. condenser cooling water temperature

C. condenser cooling water flow rate

D. air leakage rate into the condenser

ANSWER: C.

TOPIC: 293004
KNOWLEDGE: K1.12 [2.9/3.1]
QID: B78 (P2276)

The steam cycle thermal efficiency of a nuclear power plant can be increased by...

A. decreasing power from 100 percent to 25 percent.

B. removing a high-pressure feedwater heater from service.

C. lowering condenser vacuum from 29 inches to 25 inches.

D. decreasing the amount of condensate depression (subcooling).

ANSWER: D.

TOPIC: 293004
KNOWLEDGE: K1.12 [2.9/3.1]
QID: B200

A nuclear power plant is operating at 90 percent of rated power. Which one of the following effects will result from an increase in main condenser vacuum (lower absolute pressure)? (Assume reactor power and main steam mass flow rate are unchanged.)

A. An increase in condensate temperature.

B. An increase in the heat transfer rate in the main condenser.

C. An increase in main turbine efficiency.

D. An increase in condensate subcooling.

ANSWER: C.

TOPIC: 293004
KNOWLEDGE: K1.12 [2.9/3.1]
QID: B277 (P477)

Main condenser pressure is 1.0 psia. During the cooling process in the condenser, the temperature of the low pressure turbine exhaust decreases to 100°F, at which time it is a...

A. saturated liquid.

B. saturated vapor.

C. subcooled liquid.

D. superheated vapor.

ANSWER: C.

TOPIC: 293004
KNOWLEDGE: K1.12 [2.9/3.1]
QID: B1484 (P3576)

A main condenser is operating at 28 inches Hg vacuum with a condensate outlet temperature of 92°F. Which one of the following is the approximate amount of condensate depression?

A. 5°F

B. 9°F

C. 13°F

D. 17°F

ANSWER: B.

TOPIC: 293004
KNOWLEDGE: K1.12 [2.9/3.1]
QID: B1876 (P876)

Which one of the following is the approximate condensate subcooling in a steam condenser operating at 26 inches Hg vacuum with a condensate temperature of 100°F?

A. 2°F

B. 19°F

C. 25°F

D. 53°F

ANSWER: C.

TOPIC: 293004
KNOWLEDGE: K1.12 [2.9/3.1]
QID: B2077 (P2476)

A nuclear power plant is operating at 90 percent of rated power. Main condenser pressure is 1.69 psia and hotwell condensate temperature is 120°F.

Which one of the following describes the effect of a 5 percent decrease in cooling water flow rate through the main condenser on steam cycle thermal efficiency?

A. Efficiency will increase, because condensate depression will decrease.

B. Efficiency will increase, because the work output of the main turbine will increase.

C. Efficiency will decrease, because condensate depression will increase.

D. Efficiency will decrease, because the work output of the main turbine will decrease.

ANSWER: D.

TOPIC: 293004
KNOWLEDGE: K1.12 [2.9/3.1]
QID: B2176 (P1176)

A nuclear power plant is operating at 80 percent power with 5°F of condensate depression in the main condenser. If the condensate depression increases to 10°F, the steam cycle thermal efficiency will _____; and the condensate pumps will operate _____ cavitation.

A. increase; closer to

B. increase; farther from

C. decrease; closer to

D. decrease; farther from

ANSWER: D.

TOPIC: 293004
KNOWLEDGE: K1.12 [2.9/3.1]
QID: B2277 (P74)

Condensate depression is the process of...

A. removing condensate from turbine exhaust steam.

B. spraying condensate into turbine exhaust steam.

C. heating turbine exhaust steam above its saturation temperature.

D. cooling turbine exhaust steam below its saturation temperature.

ANSWER: D.

TOPIC: 293004
KNOWLEDGE: K1.12 [2.9/3.1]
QID: B2576 (P2576)

A nuclear power plant is operating at 80 percent power with 5°F of condensate depression in the main condenser. If the condensate depression decreases to 2°F, the steam cycle thermal efficiency will _____; and the condensate pumps will operate _____ cavitation.

A. increase; closer to

B. increase; farther from

C. decrease; closer to

D. decrease; farther from

ANSWER: A.

TOPIC: 293004
KNOWLEDGE: K1.12 [2.9/3.1]
QID: B2676 (P576)

Which one of the following explains why condensate subcooling is necessary in a nuclear power plant steam cycle?

A. To provide a better condenser vacuum.

B. To maximize overall steam cycle thermal efficiency.

C. To provide net positive suction head for the condensate pumps.

D. To minimize turbine blade and condenser tube erosion by entrained moisture.

ANSWER: C.

TOPIC: 293004
KNOWLEDGE: K1.12 [2.9/3.1]
QID: B2775 (P1977)

Condensate is collecting in a main condenser hotwell at 90°F with a condenser pressure of 28 inches Hg vacuum. Which one of the following will improve the steam cycle thermal efficiency?

A. Main condenser cooling water flow rate decreases by 5 percent with no change in condenser vacuum.

B. Main condenser cooling water inlet temperature decreases by 10°F with no change in condenser vacuum.

C. Main condenser vacuum decreases to 27 inches Hg due to buildup of noncondensible gases.

D. Steam flow through the turbine decreases by 10 percent with no change in condenser vacuum.

ANSWER: A.

TOPIC: 293004
KNOWLEDGE: K1.12 [2.9/3.1]
QID: B2976 (P1576)

What is the approximate condensate depression in a condenser operating at 28 inches Hg vacuum with a condensate temperature of 100°F?

A. Less than 2°F

B. 3°F to 5°F

C. 6°F to 8°F

D. 9°F to 11°F

ANSWER: A.

TOPIC: 293004
KNOWLEDGE: K1.12 [2.9/3.1]
QID: B3877 (P3876)

Main turbine exhaust enters a main condenser and condenses at 126°F. The condensate is cooled to 100°F before entering the main condenser hotwell. Assuming main condenser vacuum does <u>not</u> change, which one of the following would improve the thermal efficiency of the steam cycle?

A. Increase condenser cooling water flow rate by 5 percent.

B. Decrease condenser cooling water flow rate by 5 percent.

C. Increase main condenser hotwell level by 5 percent.

D. Decrease main condenser hotwell level by 5 percent.

ANSWER: B.

TOPIC: 293004
KNOWLEDGE: K1.13 [2.5/2.6]
QID: B377

A nuclear power plant is operating at 100 percent power when the only in-service steam jet air ejector is inadvertently isolated from the main condenser. The operator verifies that condenser cooling water system parameters have not changed. If no operator action is taken over the next 60 minutes, condenser pressure will...

A. slowly decrease.

B. slowly increase and stabilize at a slightly higher pressure.

C. slowly and continuously increase towards atmospheric pressure.

D. remain the same.

ANSWER: C.

TOPIC: 293004
KNOWLEDGE: K1.13 [2.5/2.6]
QID: B877

Which one of the following explains why the condensation of turbine exhaust steam in a main condenser creates a vacuum?

A. The entropy of the exhaust steam increases as it condenses.

B. The entropy of the exhaust steam decreases as it condenses.

C. The specific volume of the exhaust steam increases as it condenses.

D. The specific volume of the exhaust steam decreases as it condenses.

ANSWER: D.

TOPIC: 293004
KNOWLEDGE: K1.13 [2.5/2.6]
QID: B977

A nuclear power plant is operating at 90 percent power. Which one of the following describes the effect of increasing cooling water flow rate through the main condenser?

A. The saturation temperature in the main condenser decreases.

B. The enthalpy of the condensate leaving the main condenser increases.

C. The temperature of the cooling water leaving the main condenser increases.

D. The total rate of heat transfer from the turbine exhaust steam to the cooling water decreases.

ANSWER: A.

TOPIC: 293004
KNOWLEDGE: K1.13 [2.5/2.6]
QID: B1177

A nuclear power plant is operating at 100 percent power. Which one of the following describes how and why main condenser pressure changes when condenser cooling water flow rate significantly decreases?

A. Decreases, because main condenser saturation temperature increases.

B. Decreases, because main condenser condensate subcooling decreases.

C. Increases, because main condenser saturation temperature increases.

D. Increases, because main condenser condensate subcooling decreases.

ANSWER: C.

TOPIC: 293004
KNOWLEDGE: K1.13 [2.5/2.6]
QID: B2377

A nuclear power plant is operating at 100 percent power. Which one of the following describes how and why main condenser pressure will change if condenser cooling water flow rate increases significantly?

A. Decreases, because main condenser saturation temperature decreases.

B. Decreases, because main condenser condensate subcooling increases.

C. Increases, because main condenser saturation temperature decreases.

D. Increases, because main condenser condensate subcooling increases.

ANSWER: A.

TOPIC: 293004
KNOWLEDGE: K1.13 [2.5/2.6]
QID: B7609 (P7609)

A main condenser is operating at 1.0 psia. If 20,000 ft^3 of dry saturated steam is condensed to saturated water in the condenser, what will be the approximate volume of the saturated water?

A. 1 ft^3

B. 10 ft^3

C. 100 ft^3

D. 1,000 ft^3

ANSWER: A.

TOPIC: 293004
KNOWLEDGE: K1.14 [2.6/2.7]
QID: B1677

Which one of the following is a primary function performed by a main condenser?

A. Deaerate turbine exhaust condensate

B. Remove ions from main condensate

C. Filter out impurities from main condensate

D. Provide net positive suction head for feed water pumps

ANSWER: A.

TOPIC: 293004
KNOWLEDGE: K1.14 [2.6/2.7]
QID: B1777

A nuclear power plant is operating normally at 80 percent power. Which one of the following will result in the most rapid initial loss of condenser vacuum?

A. All air ejectors are isolated from the main condenser.

B. All feed and condensate pumps are stopped.

C. All condenser cooling water flow is stopped.

D. All condenser hotwell makeup water flow is stopped.

ANSWER: C.

TOPIC: 293004
KNOWLEDGE: K1.14 [2.6/2.7]
QID: B3077 (P3078)

Which one of the following will be caused by a decrease in main condenser vacuum (higher absolute pressure) in a nuclear power plant operating at 100 percent power? (Assume that main steam and main condenser circulating water mass flow rates do not change.)

A. Decrease in the condensate temperature.

B. Decrease in the ideal steam cycle thermal efficiency.

C. Decrease in the condensate pump required net positive suction head.

D. Decrease in the mass of noncondensible gases in the condenser.

ANSWER: B.

TOPIC: 293004
KNOWLEDGE: K1.14 [2.6/2.7]
QID: B3777 (P3734)

A nuclear power plant is operating near rated power with the following initial conditions:

Main steam pressure = 900 psia
Main steam quality = 100 percent, saturated vapor
Main condenser pressure = 1.0 psia

Air leakage into the main condenser results in the main condenser pressure increasing and stabilizing at 2.0 psia. Assume that all main steam parameters (e.g., pressure, quality, and mass flow rate) remain the same and that the main turbine efficiency remains at 100 percent.

Which one of the following is the percent by which the main generator MW output will decrease as a result of the main condenser pressure increase?

A. 5.0 percent

B. 6.3 percent

C. 7.5 percent

D. 8.8 percent

ANSWER: C.

TOPIC: 293005
KNOWLEDGE: K1.03 [2.6/2.7]
QID: B678

The location in a main turbine that experiences the greatest amount of blade erosion is the _____ stage of the _____ pressure turbine.

A. last; high

B. last; low

C. first; high

D. first; low

ANSWER: B.

TOPIC: 293005
KNOWLEDGE: K1.03 [2.6/2.7]
QID: B1978 (P2678)

If the moisture content of the steam supplied to a turbine decreases, the steam cycle thermal efficiency will increase because the...

A. enthalpy of the steam being supplied to the turbine has increased.

B. mass flow rate of the steam through the turbine has increased.

C. reheat capacity of the turbine extraction steam has increased.

D. the operating temperature of the turbine blades has increased.

ANSWER: A.

TOPIC: 293005
KNOWLEDGE: K1.03 [2.6/2.7]
QID: B2678

A main turbine consists of a high pressure (HP) unit and several low pressure (LP) units. The main turbine is most likely to experience stress-related failures of the rotor blades in the _____ stages of the _____ unit(s).

A. inlet; HP

B. inlet; LP

C. outlet; HP

D. outlet; LP

ANSWER: D.

TOPIC: 293005
KNOWLEDGE: K1.03 [2.6/2.7]
QID: B2978 (P2278)

If the moisture content of the steam supplied to a main turbine increases, turbine work will...
(Assume the total mass flow rate does <u>not</u> change.)

A. decrease, because the enthalpy of the moist steam being supplied to the turbine has decreased.

B. decrease, because moist steam is more likely to leak between turbine stages.

C. increase, because the enthalpy of the moist steam being supplied to the turbine has increased.

D. increase, because moist steam is less likely to leak between turbine stages.

ANSWER: A.

TOPIC: 293005
KNOWLEDGE: K1.03 [2.6/2.7]
QID: B7240 (P7241)

A nuclear power plant has a thermal power rating of 3,200 MW. When the plant operates at 100 percent power, the main generator produces 1,200 MW at a 0.95 power factor. Plant modifications are planned that will upgrade the feedwater heaters and moisture separator/reheaters without changing the plant's thermal power rating. If the plant modifications improve plant thermal efficiency by 2 percent, what will be the resulting main generator electrical output at 100 percent reactor power with the same power factor?

A. 1,204 MW

B. 1,224 MW

C. 1,244 MW

D. 1,264 MW

ANSWER: D.

TOPIC: 293005
KNOWLEDGE: K1.03 [2.6/2.7]
QID: B7700 (P7700)

A nuclear reactor has a thermal power rating of 3,200 MW. When the reactor operates at 100 percent power, the main generator produces 1,200 MW at a 0.95 power factor. Modifications are planned that will upgrade major power plant equipment without changing the reactor's thermal power rating. If the modifications improve the power plant's thermal efficiency by 3 percent, what will be the resulting main generator electrical output with the same power factor at 100 percent reactor power?

A. 1,224 MW

B. 1,236 MW

C. 1,264 MW

D. 1,296 MW

ANSWER: D.

TOPIC: 293005
KNOWLEDGE: K1.05 [2.7/2.8]
QID: B129

Which one of the following lists the initial effects of isolating extraction steam to a high pressure feedwater heater while at 90 percent power?

A. Core inlet subcooling remains the same and main generator MW output decreases.

B. Core inlet subcooling and reactor power both decrease.

C. Reactor power and main generator MW output remain the same.

D. Core inlet subcooling and main generator MW output both increase.

ANSWER: D.

TOPIC: 293005
KNOWLEDGE: K1.05 [2.7/2.8]
QID: B140

A direct advantage of using feedwater heaters in a typical steam cycle is that feedwater heaters increase the...

A. cycle efficiency.

B. turbine efficiency.

C. turbine MW output.

D. feedwater pump net positive suction head.

ANSWER: A.

TOPIC: 293005
KNOWLEDGE: K1.05 [2.7/2.8]
QID: B278

Which one of the following is the most probable location for superheated steam in a boiling water reactor steam cycle that uses moisture-separator reheaters?

A. The outlet of the high pressure turbine.

B. The inlet of the low pressure turbines.

C. The inlet of the high pressure turbine.

D. The outlet of the low pressure turbines.

ANSWER: B.

TOPIC: 293005
KNOWLEDGE: K1.05 [2.7/2.8]
QID: B978

A nuclear power plant is operating steady-state at 85 percent power when the extraction steam to a high pressure feedwater heater is isolated. Which one of the following describes the initial effect on main generator output (MW)? (Assume no operator action and no reactor protection actuation.)

A. Increases, because the steam cycle thermal efficiency initially increases.

B. Decreases, because the steam cycle thermal efficiency initially decreases.

C. Increases, because the steam flow rate through the main turbine initially increases.

D. Decreases, because the steam flow rate through the main turbine initially decreases.

ANSWER: C.

TOPIC: 293005
KNOWLEDGE: K1.05 [2.7/2.8]
QID: B1278 (P3378)

A nuclear power plant was initially operating at steady-state 90 percent reactor power when extraction steam to the feedwater heaters was isolated. With extraction steam still isolated, reactor power was returned to 90 percent and the plant was stabilized.

Compared to the initial main generator MW output, the current main generator MW output is...

A. lower, because the steam cycle is less efficient.

B. higher, because the steam cycle is less efficient.

C. lower, because more steam heat energy is available to the main turbine.

D. higher, because more steam heat energy is available to the main turbine.

ANSWER: A.

TOPIC: 293005
KNOWLEDGE: K1.05 [2.7/2.8]
QID: B1378

A nuclear power plant is operating at 80 percent power with 10°F of condensate subcooling. Which one of the following initially will increase the steam cycle thermal efficiency? (Assume main condenser vacuum does <u>not</u> change unless stated otherwise.)

A. Isolating extraction steam to a feedwater heater.

B. Decreasing main condenser cooling water flow rate.

C. Decreasing main condenser cooling water inlet temperature.

D. Decreasing main condenser vacuum (increasing pressure).

ANSWER: B.

TOPIC: 293005
KNOWLEDGE: K1.05 [2.7/2.8]
QID: B1679 (P1980)

A nuclear power plant is initially operating at 85 percent reactor power when extraction steam to a high pressure feedwater heater is isolated. Main generator load is returned to its initial value. When the plant stabilizes, reactor power will be _____ than 85 percent; and the steam cycle thermal efficiency will be _____.

A. greater; lower

B. greater; higher

C. less; lower

D. less; higher

ANSWER: A.

TOPIC: 293005
KNOWLEDGE: K1.05 [2.7/2.8]
QID: B1879 (P1878)

A nuclear power plant is operating at 85 percent power when the extraction steam to a high pressure feedwater heater is isolated. After the transient, the operator returns reactor power to 85 percent and stabilizes the plant. Compared to the conditions just prior to the transient, the current main generator output (MW) is...

A. higher, because increased steam flow to the main turbine caused the main generator to pick up load.

B. lower, because decreased steam flow to the main turbine caused the main generator to reject load.

C. higher, because the steam cycle thermal efficiency has increased.

D. lower, because the steam cycle thermal efficiency has decreased.

ANSWER: D.

TOPIC: 293005
KNOWLEDGE: K1.05 [2.7/2.8]
QID: B2178 (P2178)

If superheating of the inlet steam to a low pressure (LP) turbine is reduced, LP turbine work output will _____; and LP turbine exhaust moisture content will _____. (Assume steam mass flow rate does not change.)

A. remain the same; increase

B. remain the same; decrease

C. decrease; increase

D. decrease; decrease

ANSWER: C.

TOPIC: 293005
KNOWLEDGE: K1.05 [2.7/2.8]
QID: B3378 (P3375)

Given the following:

- A saturated steam-water mixture with an inlet quality of 60 percent is flowing through a moisture separator.
- The moisture separator is 100 percent efficient for removing moisture.

How much moisture will be removed by the moisture separator from 50 lbm of the steam-water mixture?

A. 10 lbm

B. 20 lbm

C. 30 lbm

D. 40 lbm

ANSWER: B.

TOPIC: 293005
KNOWLEDGE: K1.05 [2.7/2.8]
QID: B3578 (P378)

Steam turbines X and Y are identical 100 percent efficient turbines that exhaust to a condenser at 1.0 psia. Dry saturated steam at 250 psia enters turbine X. Superheated steam at 250 psia and 500°F enters turbine Y.

Which one of the following lists the percentage of moisture at the exhaust of turbines X and Y?

	Turbine X	Turbine Y
A.	24.5%	20.5%
B.	26.3%	13.0%
C.	24.5%	13.0%
D.	26.3%	20.5%

ANSWER: A.

TOPIC: 293005
KNOWLEDGE: K1.05 [2.7/2.8]
QID: B3778 (P3774)

Given the following:

- A saturated steam-water mixture with an inlet quality of 40 percent is flowing through a moisture separator.
- The moisture separator is 100 percent efficient for removing water.

How much water will be removed by the moisture separator from 50 lbm of the steam-water mixture?

A. 10 lbm

B. 20 lbm

C. 30 lbm

D. 40 lbm

ANSWER: C.

TOPIC: 293005
KNOWLEDGE: K1.05 [2.7/2.8]
QID: B7440

A nuclear power plant was initially operating at steady-state 85 percent reactor power when the extraction steam to a high pressure feedwater heater was isolated. With the feedwater heater still isolated, the operators stabilized the plant at 85 percent reactor power. Compared to the initial main generator output (MW), the current main generator output (MW) is…

A. lower, because the steam cycle thermal efficiency is lower.

B. lower, because the steam mass flow rate through the main turbine is lower.

C. higher, because the steam cycle thermal efficiency is higher.

D. higher, because the steam mass flow rate through the main turbine is higher.

ANSWER: A.

TOPIC: 293005
KNOWLEDGE: K1.05
QID: B7610

Given the following:

- A saturated steam-water mixture with an inlet quality of 70 percent is flowing through a moisture separator.
- The moisture separator is 100 percent efficient for removing moisture.

How much moisture will be removed by the moisture separator from 50 lbm of the steam-water mixture?

A. 15 lbm

B. 30 lbm

C. 35 lbm

D. 50 lbm

ANSWER: A.

TOPIC: 293006
KNOWLEDGE: K1.03 [2.4/2.5]
QID: B925 (P1921)

Refer to the drawing of centrifugal pump and system operating curves (see figure below).

Which one of the following determines the general shape of the curve from point C to point D?

A. The frictional and throttling losses in the piping system as the system flow rate increases.

B. The frictional losses between the pump impeller and its casing as the differential pressure (D/P) across the pump increases.

C. The pump flow losses, due to the decrease in available net positive suction head as the system flow rate increases.

D. The pump flow losses, due to back leakage through the clearances between the pump impeller and casing as the D/P across the pump increases.

ANSWER: A.

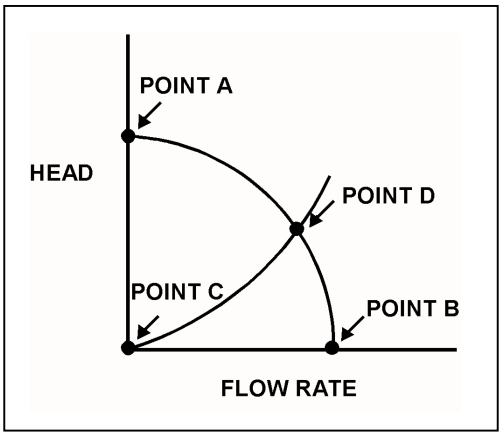

TOPIC: 293006
KNOWLEDGE: K1.03 [2.4/2.5]
QID: B979

Head loss is...

A. the reduction in discharge pressure experienced by a real pump due to slippage.

B. the reduction in discharge pressure experienced by a real pump due to mechanical friction.

C. the conversion of system fluid pressure and velocity to heat energy because of friction.

D. the change in static pressure in a piping system resulting from changes in elevation.

ANSWER: C.

TOPIC: 293006
KNOWLEDGE: K1.05 [3.2/3.3]
QID: B79 (P80)

If a valve closure suddenly stops fluid flow, the resulting piping system pressure spike is referred to as...

A. cavitation.

B. shutoff head.

C. water hammer.

D. valve chatter.

ANSWER: C.

TOPIC: 293006
KNOWLEDGE: K1.05 [3.2/3.3]
QID: B148 (P2279)

Which one of the following operating practices minimizes the possibility of water hammer?

A. Change valve position as rapidly as possible.

B. Start a centrifugal pump with the discharge valve throttled.

C. Start a positive displacement pump with the discharge valve closed.

D. Vent a system only after initiating system flow.

ANSWER: B.

TOPIC: 293006
KNOWLEDGE: K1.05 [3.2/3.3]
QID: B279 (P679)

A sudden stop of fluid flow in a piping system, due to rapid closure of an isolation valve, will most likely result in...

A. check valve slamming.

B. pump runout.

C. piping hanger damage.

D. pressurized thermal shock.

ANSWER: C.

TOPIC: 293006
KNOWLEDGE: K1.05 [3.2/3.3]
QID: B380 (P381)

The major concern with starting a main feedwater pump with downstream fluid in a saturated condition is...

A. cavitation.

B. water hammer.

C. thermal shock.

D. positive reactivity addition.

ANSWER: B.

TOPIC: 293006
KNOWLEDGE: K1.05 [3.2/3.3]
QID: B1180 (P2480)

Which one of the following will increase the possibility of water hammer?

A. Opening and closing system valves very slowly.

B. Venting liquid systems only after initiating system flow.

C. Starting centrifugal pumps with the discharge valve closed.

D. Starting positive displacement pumps with the discharge valve open.

ANSWER: B.

TOPIC: 293006
KNOWLEDGE: K1.05 [3.2/3.3]
QID: B2081 (P2079)

Which one of the following will minimize the possibility of water hammer?

A. Draining the discharge line of a centrifugal pump after shutdown.

B. Draining condensate out of steam lines before and after initiating flow.

C. Starting a centrifugal pump with its discharge valve fully open.

D. Starting a positive displacement pump with its discharge valve partially closed.

ANSWER: B.

TOPIC: 293006
KNOWLEDGE: K1.05 [3.2/3.3]
QID: B2679 (P2279)

Which one of the following operating practices minimizes the possibility of water hammer?

A. Change valve positions as rapidly as possible.

B. Start centrifugal pumps with the discharge valve throttled.

C. Start positive displacement pumps with the discharge valve closed.

D. Vent systems only after initiating system flow.

ANSWER: B.

TOPIC: 293006
KNOWLEDGE: K1.05 [3.2/3.3]
QID: B2779 (P1879)

Which one of the following describes why large steam lines are gradually warmed instead of suddenly admitting full steam flow?

A. To minimize the possibility of stress corrosion cracking of the steam lines.

B. To minimize the total thermal expansion of the steam lines.

C. To minimize the potential for water hammer in the steam lines.

D. To minimize the heat loss from the steam lines.

ANSWER: C.

TOPIC: 293006
KNOWLEDGE: K1.05 [3.2/3.3]
QID: B4041 (P4042)

Refer to the drawing of two lengths of 6-inch diameter pipe, each containing an identical automatic isolation valve. The actual pipe lengths are proportional to their symbols in the drawing

Water at 65°F is flowing at 1,000 gpm through each pipe. If the isolation valves instantly close, valve A piping will experience a pressure increase that is _____ the pressure increase experienced by valve B piping; and the pressure spike will dissipate quicker in the _____ length of pipe.

A. equal to; shorter

B. equal to; longer

C. less than; shorter

D. less than; longer

ANSWER: A.

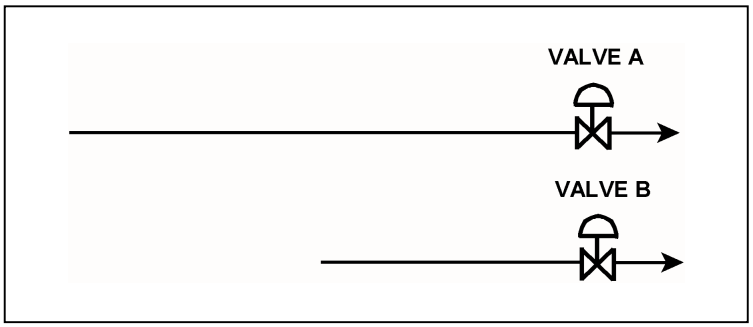

TOPIC: 293006
KNOWLEDGE: K1.05 [3.2/3.3]
QID: B6241 (P6242)

Refer to the drawing of two lengths of 16-inch diameter pipe, each containing an identical automatic isolation valve. The actual pipe lengths are proportional to their symbols in the drawing.

Water is flowing at 10,000 gpm through each pipe when both isolation valves instantly close. Consider two cases:

Case 1: The water temperature upstream of both valves is 65°F.
Case 2: The water temperature is 65°F upstream of valve A, and 85°F upstream of valve B.

For which case(s), if any, will valve A experience a pressure spike that is greater than the pressure spike at valve B?

A. Case 1 only

B. Case 2 only

C. Both cases

D. Neither case

ANSWER: B.

TOPIC: 293006
KNOWLEDGE: K1.05 [3.2/3.3]
QID: B6741 (P6742)

Refer to the drawing of two lengths of 16-inch diameter pipe, each containing an identical automatic isolation valve. The actual pipe lengths are proportional to their symbols in the drawing.

Water is flowing at 10,000 gpm through each pipe when both isolation valves instantly close.

Consider two cases:

Case 1: The water temperature upstream of both valves is 65°F.
Case 2: The water temperature is 85°F upstream of valve A, and 65°F upstream of valve B.

For which case(s), if any, will valve A experience a pressure spike that is greater than the pressure spike at valve B?

A. Case 1 only

B. Case 2 only

C. Both cases

D. Neither case

ANSWER: D.

TOPIC: 293006
KNOWLEDGE: K1.05 [3.2/3.3]
QID: B7620 (P7620)

Which one of the following will result in a higher probability and/or severity of water hammer in a flowing water system?

A. Gradual pipe bends rather than sharp pipe bends.

B. Shorter pipe lengths rather than longer pipe lengths.

C. Lower initial flow rates rather than higher initial flow rates.

D. Shorter valve stroke times rather than longer valve stroke times.

ANSWER: D.

TOPIC: 293006
KNOWLEDGE: K1.06 [2.5/2.6]
QID: B1480

Which one of the following components of a centrifugal pump has the specific primary function of converting the kinetic energy of a fluid into pressure?

A. Volute

B. Impeller

C. Pump shaft

D. Discharge nozzle

ANSWER: A.

TOPIC: 293006
KNOWLEDGE: K1.07 [2.5/2.6]
QID: B479

If the discharge valve of an operating ideal positive displacement pump is repositioned from fully open to 75 percent open, pump head will _____; and pump flow rate will _____.

A. increase; remain the same

B. increase; decrease

C. remain the same; remain the same

D. remain the same; decrease

ANSWER: A.

TOPIC: 293006
KNOWLEDGE: K1.07 [2.5/2.6]
QID: B1280

Which one of the following describes pump head?

A. The fluid energy contained at the inlet of a pump.

B. The energy added by a pump in excess of shutoff head.

C. The fluid energy required to ensure a pump does not cavitate.

D. The energy added by a pump to increase fluid pressure or velocity.

ANSWER: D.

TOPIC: 293006
KNOWLEDGE: K1.07 [2.5/2.6]
QID: B1680 (P3525)

An ideal positive displacement pump is pumping to a system operating at 100 psig. Assume pump speed is constant, zero pump slip, and pump backpressure remains within normal pump operating limits.

If system pressure increases to 200 psig, the pump head will _____; and pump flow rate will _____.

A. increase; remain the same

B. increase; decrease

C. remain the same; remain the same

D. remain the same; decrease

ANSWER: A.

TOPIC: 293006
KNOWLEDGE: K1.08 [2.5/2.6]
QID: B198

Which one of the following statements describes the application of centrifugal pump laws?

A. Pump head is directly proportional to speed.

B. Power varies as the square of the speed.

C. Pump head varies as the square of the speed.

D. Capacity varies as the cube of the speed.

ANSWER: C.

TOPIC: 293006
KNOWLEDGE: K1.08 [2.5/2.6]
QID: B322 (P325)

Increasing the flow rate from a centrifugal pump by throttling open the discharge valve will cause pump head to...

A. increase and stabilize at a higher value.

B. decrease and stabilize at a lower value.

C. remain constant because pump head is a design parameter.

D. increase, then decrease following the pump's efficiency curve.

ANSWER: B.

TOPIC: 293006
KNOWLEDGE: K1.08 [2.5/2.6]
QID: B2579

Decreasing the flow rate from a centrifugal pump by throttling the pump discharge valve will cause pump head to...

A. increase and stabilize at a higher value.

B. decrease and stabilize at a lower value.

C. remain constant because pump head is a design parameter.

D. decrease, then increase following the pump's efficiency curve.

ANSWER: A.

TOPIC: 293006
KNOWLEDGE: K1.08 [2.5/2.6]
QID: B3579 (P2923)

Refer to the drawing of four sets of centrifugal pump and system operating curves (see figure below). Each set of curves shows the results of a change in pump and/or system operating conditions.

Initially, a two-speed centrifugal pump is operating at high speed in a cooling water system and discharging through a heat exchanger. The pump is then switched to low speed.

Which set of operating curves depicts the "before" and "after" conditions described above?

A. 1.

B. 2.

C. 3.

D. 4.

ANSWER: B.

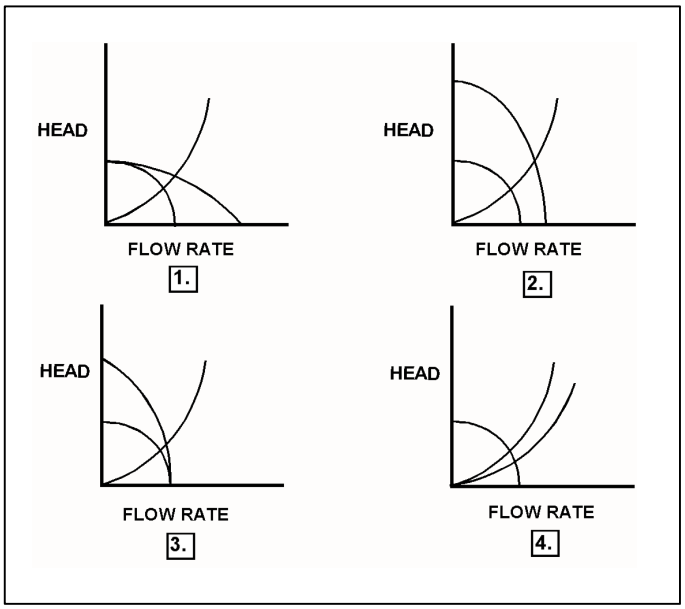

TOPIC: 293006
KNOWLEDGE: K1.09 [2.8/2.9]
QID: B80 (P382)

Which one of the following is most likely to cause cavitation in an operating centrifugal pump?

A. Lowering the suction temperature.

B. Throttling the pump suction valve.

C. Throttling the pump discharge valve.

D. Decreasing the pump speed.

ANSWER: B.

TOPIC: 293006
KNOWLEDGE: K1.09 [2.8/2.9]
QID: B280 (P2680)

Cavitation is the formation of vapor bubbles in the _____ pressure area of a pump followed by the _____ of these bubbles within the pump casing.

A. low; expansion

B. low; collapse

C. high; expansion

D. high; collapse

ANSWER: B.

TOPIC: 293006
KNOWLEDGE: K1.09 [2.8/2.9]
QID: B1880 (P2981)

Pump cavitation occurs when vapor bubbles are formed at the eye of a pump impeller...

A. because the localized flow velocity exceeds sonic velocity for the existing fluid temperature.

B. because the localized pressure exceeds the vapor pressure for the existing fluid temperature.

C. and enter a high pressure region of the pump where they collapse causing damaging pressure pulsations.

D. and are discharged from the pump where they expand into larger bubbles causing damaging pressure pulsations.

ANSWER: C.

TOPIC: 293006
KNOWLEDGE: K1.10 [2.7/2.8]
QID: B82

Net positive suction head is the...

A. difference between pump suction pressure and the saturation pressure of the fluid being pumped.

B. difference between the total suction head and the pressure at the eye of the pump.

C. amount of suction pressure required to prevent cavitation.

D. difference between the pump suction pressure and the pump discharge pressure.

ANSWER: A.

TOPIC: 293006
KNOWLEDGE: K1.10 [2.7/2.8]
QID: B281

The available net positive suction head of a centrifugal pump...

A. decreases with increased subcooling to the pump.

B. decreases with an increase in pump flow rate.

C. increases as the suction temperature increases.

D. decreases as pump discharge pressure increases.

ANSWER: B.

TOPIC: 293006
KNOWLEDGE: K1.10 [2.7/2.8]
QID: B1381

Which one of the following sets of parameters directly affects available net positive suction head for the recirculation pumps?

A. Feedwater temperature, reactor power, and reactor water level

B. Feedwater temperature, reactor pressure, and reactor water level

C. Reactor water level, feedwater flow rate, and reactor power

D. Reactor pressure, reactor power, and feedwater flow rate

ANSWER: B.

TOPIC: 293006
KNOWLEDGE: K1.11 [2.4/2.5]
QID: B381

A single stage centrifugal pump is operating in an open system. Which one of the following is the force caused by subjecting the pump impeller to the unequal pressures that exist at the suction and the discharge of the pump?

A. Axial thrust

B. Radial thrust

C. Kingsbury thrust

D. Journal thrust

ANSWER: A.

TOPIC: 293006
KNOWLEDGE: K1.11 [2.4/2.5]
QID: B680

An AC motor-driven radial-flow centrifugal pump is operating at rated flow and pressure in a cooling water system. A break occurs in the pump discharge piping resulting in a decrease in pump backpressure.

As a result of the break, the pump will operate at a _____ flow rate; and the pump motor will draw _____ electrical power.

A. higher; more

B. higher; less

C. lower; more

D. lower; less

ANSWER: A.

TOPIC: 293006
KNOWLEDGE: K1.12 [2.9/2.9]
QID: B143 (P279)

A centrifugal water pump was returned to service after maintenance. However, the operator failed to vent the pump.

Compared to normal pump operating conditions, after the pump is started the operator will see a _____ flow rate and a _____ discharge head.

A. higher; lower

B. higher; higher

C. lower; lower

D. lower; higher

ANSWER: C.

TOPIC: 293006
KNOWLEDGE: K1.13 [2.6/2.7]
QID: B283

Single-speed centrifugal pump A is operating in a closed system. Identical centrifugal pump B is started in parallel with pump A. The major effect of operating pump B in parallel with pump A is...

A. increased system pressure.

B. increased system flow rate.

C. decreased system pressure.

D. decreased system flow rate.

ANSWER: B.

TOPIC: 293006
KNOWLEDGE: K1.13 [2.6/2.7]
QID: B880

Refer to the drawing of a cooling water system (see figure below).

Pumps A and B are identical single-speed centrifugal pumps, but only pump A is operating. Assume real (non-ideal) system and pump operating characteristics.

If pump B is started, system flow rate will _____; and the total pump head will _____.

A. increase; increase

B. increase; remain the same

C. remain the same; increase

D. remain the same; remain the same

ANSWER: A.

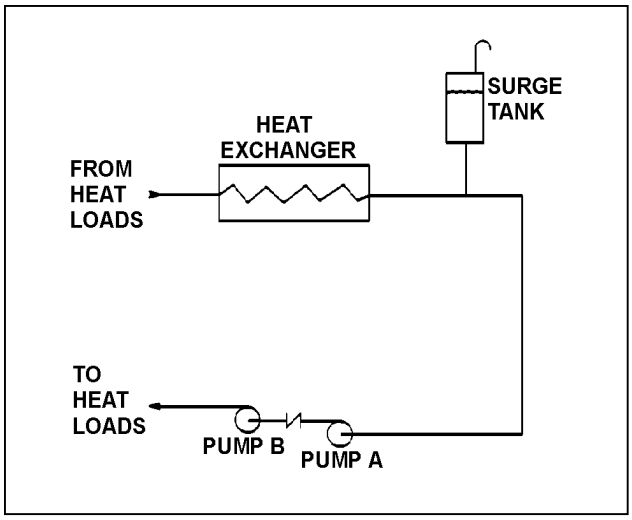

TOPIC: 293006
KNOWLEDGE: K1.13 [2.6/2.7]
QID: B1578 (P926)

Refer to the drawing of four sets of centrifugal pump and system operating curves (see figure below). Each set of curves shows the results of a change in pump and/or system operating conditions.

Two identical constant-speed centrifugal pumps are operating in series in an open system when one pump trips.

Which set of operating curves depicts the "before" and "after" conditions described above?

A. 1.

B. 2.

C. 3.

D. 4.

ANSWER: C.

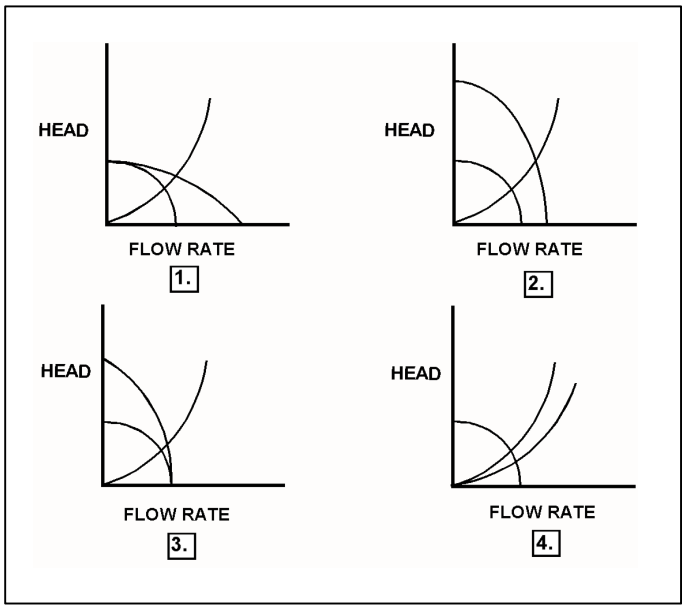

TOPIC: 293006
KNOWLEDGE: K1.13 [2.6/2.7]
QID: B1678

Refer to the drawing of a cooling water system and the associated pump/system operating curves showing two-pump operation (see figure below).

Pumps A and B are identical single-speed centrifugal pumps and both pumps are operating.

If pump B trips, the system flow rate will _____; and the total pump discharge pressure will _____.

A. remain the same; decrease

B. decrease; remain the same

C. remain the same; remain the same

D. decrease; decrease

ANSWER: D.

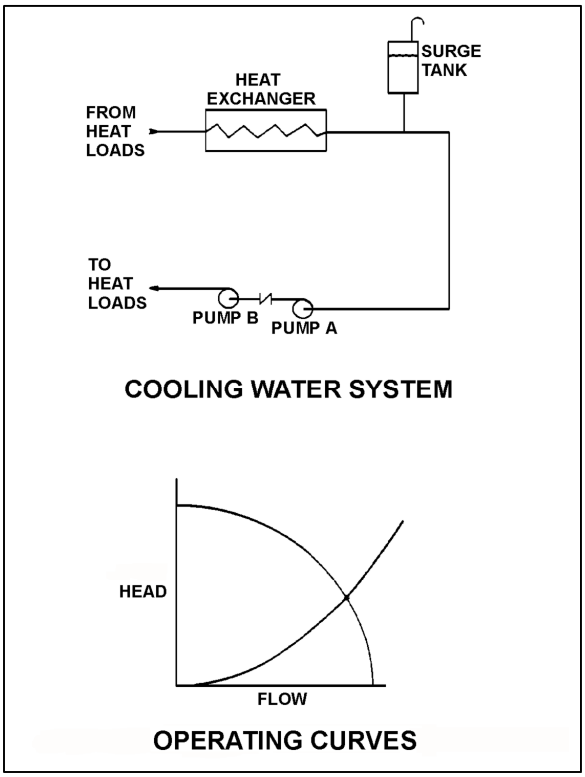

TOPIC: 293006
KNOWLEDGE: K1.13 [2.6/2.7]
QID: B1725 (P1784)

Two identical centrifugal pumps (CPs) and two identical positive displacement pumps (PDPs) are able to take suction on a vented water storage tank and provide makeup water flow to a cooling water system. The pumps are capable of being cross-connected to provide multiple configurations. In single pump alignment, each pump will supply 100 gpm at a system pressure of 1,000 psig.

Given the following information:

Centrifugal Pumps

Shutoff head = 1,500 psig
Maximum design pressure = 2,000 psig
Flow rate with no backpressure = 180 gpm

Positive Displacement Pumps

Maximum design pressure = 2,000 psig

Which one of the following pump configurations will supply the lowest makeup water flow rate to the system if system pressure is 1,700 psig?

A. Two CPs in series

B. Two CPs in parallel

C. One PDP and one CP in series (CP supplying PDP)

D. One PDP and one CP in parallel

ANSWER: B.

TOPIC: 293006
KNOWLEDGE: K1.13 [2.6/2.7]
QID: B1780 (P1724)

Refer to the drawing of four sets of centrifugal pump and system operating curves (see figure below). Each set of curves shows the results of a change in pump and/or system operating conditions.

Initially, a centrifugal pump is operating in a closed water system and discharging through a single heat exchanger. A second heat exchanger is then placed in service in parallel with the first.

Which set of operating curves depicts the "before" and "after" conditions described above?

A. 1.

B. 2.

C. 3.

D. 4.

ANSWER: D.

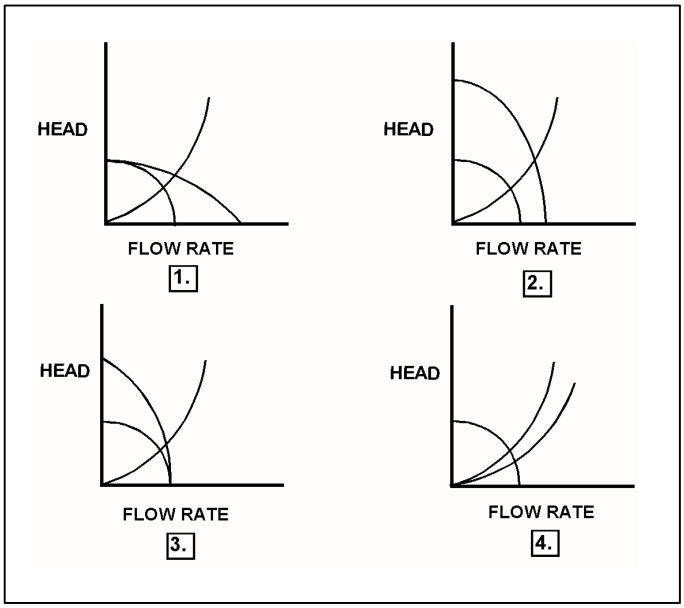

TOPIC: 293006
KNOWLEDGE: K1.13 [2.6/2.7]
QID: B1878 (P1324)

Refer to the drawing of four sets of centrifugal pump and system operating curves (see figure below). Each set of curves shows the results of a change in pump and/or system operating conditions.

Initially, a single centrifugal pump is operating in a cooling water system. Another identical centrifugal pump is then started in series with the first.

Which set of operating curves depicts the "before" and "after" conditions described above?

A. 1.

B. 2.

C. 3.

D. 4.

ANSWER: C.

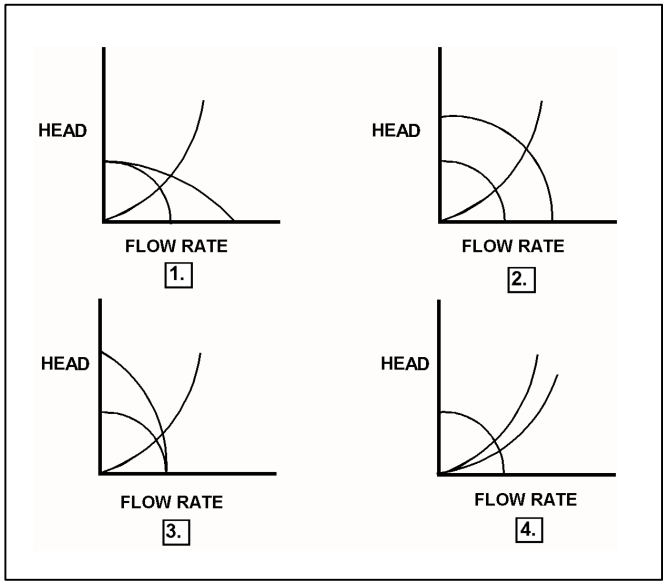

TOPIC: 293006
KNOWLEDGE: K1.13 [2.6/2.7]
QID: B2279 (P1524)

Refer to the drawing of four sets of centrifugal pump and system operating curves (see figure below). Each set of curves shows the results of a change in pump and/or system operating conditions.

Two identical constant-speed centrifugal pumps are operating in parallel in a closed system when one pump trips.

Which set of operating curves depicts the "before" and "after" conditions described above?

A. 1.

B. 2.

C. 3.

D. 4.

ANSWER: A.

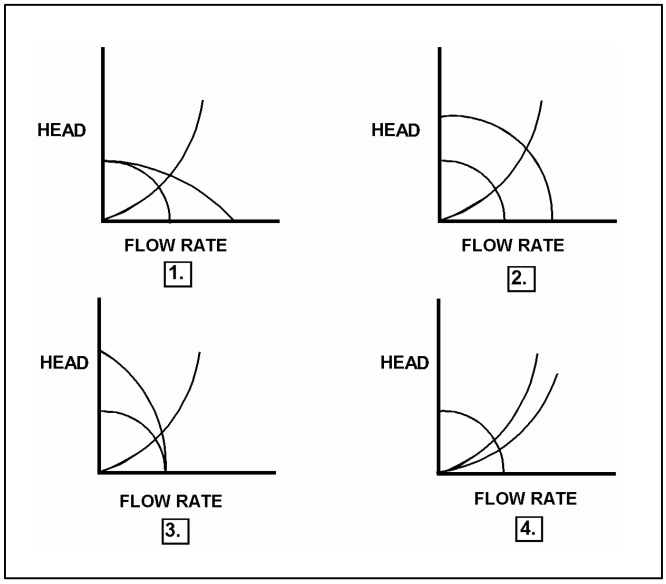

TOPIC: 293006
KNOWLEDGE: K1.13 [2.6/2.7]
QID: B2324 (P2383)

Two identical centrifugal pumps (CPs) and two identical positive displacement pumps (PDPs) are able to take suction on a vented water storage tank and provide makeup water flow to a cooling water system. The pumps are capable of being cross-connected to provide multiple configurations. In single pump alignment, each pump will supply 100 gpm at a system pressure of 1,200 psig.

Given the following information:

Centrifugal Pumps

Shutoff head = 1,500 psig
Maximum design pressure = 2,000 psig
Flow rate with no backpressure = 180 gpm

Positive Displacement Pumps

Maximum design pressure = 2,000 psig

Which one of the following pump configurations will supply the highest makeup flow rate to the system if system pressure is 500 psig?

A. Two CPs in series

B. Two CPs in parallel

C. Two PDPs in parallel

D. One CP and one PDP in series (CP supplying PDP)

ANSWER: B.

TOPIC: 293006
KNOWLEDGE: K1.13 [2.6/2.7]
QID: B2723 (P2783)

Two identical centrifugal pumps (CPs) and two identical positive displacement pumps (PDPs) are able to take suction on a vented water storage tank and provide makeup water flow to a cooling water system. The pumps are capable of being cross-connected to provide multiple configurations. In single pump alignment, each pump will supply 100 gpm at a system pressure of 1,200 psig.

Given the following information:

Centrifugal Pumps

Shutoff head = 1,500 psig
Maximum design pressure = 2,000 psig
Flow rate with no backpressure = 180 gpm

Positive Displacement Pumps

Maximum design pressure = 2,000 psig

Which one of the following pump configurations will supply the highest makeup flow rate to the cooling water system if system pressure is 1,700 psig?

A. Two CPs in series

B. Two CPs in parallel

C. Two PDPs in parallel

D. One CP and one PDP in series (CP supplying PDP)

ANSWER: C.

TOPIC: 293006
KNOWLEDGE: K1.13 [2.6/2.7]
QID: B2879 (P2823)

Refer to the drawing of four sets of centrifugal pump and system operating curves (see figure below). Each set of curves shows the results of a change in pump and/or system operating conditions.

Initially, a two-speed centrifugal pump is operating at low speed in a cooling water system and discharging through a heat exchanger. The pump is then switched to high speed.

Which set of operating curves depicts the "before" and "after" conditions described above?

A. 1.

B. 2.

C. 3.

D. 4.

ANSWER: B.

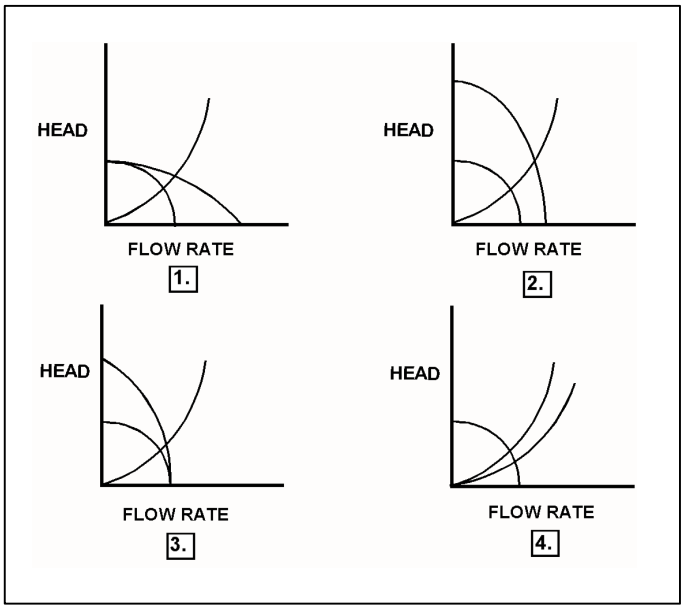

TOPIC: 293006
KNOWLEDGE: K1.13 [2.6/2.7]
QID: B3681 (P3683)

Two identical single-speed centrifugal pumps (CPs) and two identical single-speed positive displacement pumps (PDPs) are able to take suction on a vented water storage tank and provide makeup water flow to a cooling water system. The pumps are capable of being cross-connected to provide multiple configurations. In single pump alignment, each pump will supply 100 gpm at a system pressure of 1,200 psig.

Given the following information:

Centrifugal Pumps

Discharge pressure at shutoff head	= 1,500 psig
Maximum design pressure	= 2,000 psig
Flow rate with no backpressure	= 180 gpm

Positive Displacement Pumps

Maximum design pressure	= 2,000 psig

Which one of the following pump configurations will supply the highest initial flow rate to a cooling water system that is drained and depressurized?

A. Two CPs in series

B. Two CPs in parallel

C. Two PDPs in parallel

D. One CP and one PDP in series (CP supplying PDP)

ANSWER: B.

TOPIC: 293006
KNOWLEDGE: K1.13 [2.6/2.7]
QID: B4342 (P4343)

Two identical single-speed centrifugal pumps (CPs) and two identical single-speed positive displacement pumps (PDPs) are able to take suction on a vented water storage tank and provide makeup water flow to a cooling water system. The pumps are capable of being cross-connected to provide multiple configurations. In single pump alignment, each pump will supply 100 gpm at a system pressure of 1,200 psig.

Given the following information:

Centrifugal Pumps

Discharge pressure at shutoff head = 1,500 psig
Maximum design pressure = 2,000 psig
Flow rate with no backpressure = 180 gpm

Positive Displacement Pumps

Maximum design pressure = 2,000 psig

Which one of the following pump configurations will supply the lowest initial flow rate of makeup water to a cooling water system that is drained and depressurized?

A. Two CPs in series

B. Two CPs in parallel

C. Two PDPs in parallel

D. One CP and one PDP in series (CP supplying PDP)

ANSWER: D.

TOPIC: 293006
KNOWLEDGE: K1.19 [2.7/2.9]
QID: B1181 (P1222)

A nuclear power plant is operating at full power when a 200 gpm reactor coolant leak occurs, which results in a reactor scram and initiation of emergency coolant injection. Reactor vessel pressure stabilizes at 900 psia. All centrifugal injection pumps are operating with all pump miniflow paths isolated. The shutoff heads for the pumps are as follows:

High pressure coolant injection (HPCI) pumps = 1,200 psia
Low pressure coolant injection (LPCI) pumps = 200 psia

If the injection pumps continue operating under these conditions, which pumps are more likely to fail, and why?

A. LPCI pumps, due to pump overheating.

B. LPCI pumps, due to motor overheating.

C. HPCI pumps, due to pump overheating.

D. HPCI pumps, due to motor overheating.

ANSWER: A.

TOPIC: 293006
KNOWLEDGE: K1.19 [2.7/2.9]
QID: B3281

A nuclear power plant is operating at 100 percent power when a 200 gpm reactor vessel leak occurs, which results in a reactor scram and initiation of emergency coolant injection. Reactor vessel pressure stabilizes at 900 psia. All centrifugal injection pumps are operating with all pump miniflow paths isolated. The shutoff heads for the pumps are as follows:

High pressure coolant injection (HPCI) pumps = 800 psia
Low pressure coolant injection (LPCI) pumps = 200 psia

If the injection pumps continue operating under these conditions, which pumps are likely to fail, and why?

A. Only the LPCI pumps, due to pump overheating.

B. All LPCI and HPCI pumps, due to pump overheating.

C. Only the HPCI pumps, due to motor overheating.

D. All LPCI and HPCI pumps, due to motor overheating.

ANSWER: B.

TOPIC: 293006
KNOWLEDGE: K1.21 [2.4/2.6]
QID: B1980

A reactor heatup is in progress. Which one of the following reactor temperatures will result in a main steam line pressure of approximately 530 psig?

A. 462°F

B. 468°F

C. 476°F

D. 484°F

ANSWER: C.

TOPIC: 293006
KNOWLEDGE: K1.21 [2.4/2.6]
QID: B7649 (P7649)

If the quality of a flowing steam-water mixture is known, what additional information, if any, is needed to determine the percent moisture content of the steam-water mixture?

A. The mass flow rate of the mixture.

B. The specific volume of the mixture.

C. The pressure and/or temperature of the mixture.

D. No additional information is needed.

ANSWER: D.

TOPIC: 293006
KNOWLEDGE: K1.21 [2.4/2.6]
QID: B7690

A nuclear power plant is initially operating at steady-state 100 percent power. If an unplanned load rejection causes the main generator load to rapidly decrease to 90 percent, the voids in the two-phase flow in the reactor core will initially _____; which causes indicated reactor vessel water level (measured in the downcomer) to initially _____.

A. shrink; decrease

B. shrink; increase

C. expand; decrease

D. expand; increase

ANSWER: A.

TOPIC: 293006
KNOWLEDGE: K1.29 [2.6/2.7]
QID: B383 (P380)

An 85 gpm leak to atmosphere has developed from a cooling water system that is operating at 100 psig. Which one of the following will be the approximate leak rate when system pressure has decreased to 50 psig?

A. 33 gpm

B. 41 gpm

C. 52 gpm

D. 60 gpm

ANSWER: D.

TOPIC: 293006
KNOWLEDGE: K1.29 [2.6/2.7]
QID: B681 (P680)

A 55 gpm leak to atmosphere has developed from a cooling water system that is operating at 100 psig. Which one of the following will be the approximate leak rate when system pressure has decreased to 50 psig?

A. 28 gpm

B. 32 gpm

C. 39 gpm

D. 45 gpm

ANSWER: C.

TOPIC: 293006
KNOWLEDGE: K1.29 [2.6/2.7]
QID: B1783 (P1779)

A 100 gpm leak to atmosphere has developed from a cooling water system that is operating at 45 psig. Which one of the following will be the approximate leak rate when system pressure has decreased to 30 psig?

A. 25 gpm

B. 50 gpm

C. 67 gpm

D. 82 gpm

ANSWER: D.

TOPIC: 293006
KNOWLEDGE: K1.29 [2.6/2.7]
QID: B1979 (P1580)

A 60 gpm leak to atmosphere has developed from a cooling water system that is operating at 150 psig. Which one of the following will be the approximate leak rate when system pressure has decreased to 75 psig?

A. 15 gpm

B. 30 gpm

C. 42 gpm

D. 53 gpm

ANSWER: C.

TOPIC: 293006
KNOWLEDGE: K1.29 [2.6/2.7]
QID: B2080 (P2080)

An 80 gpm leak to atmosphere has developed from a cooling water system that is operating at 100 psig. Which one of the following will be the approximate leak rate when system pressure has decreased to 75 psig?

A. 69 gpm

B. 60 gpm

C. 51 gpm

D. 40 gpm

ANSWER: A.

TOPIC: 293006
KNOWLEDGE: K1.29 [2.6/2.7]
QID: B2281 (P2282)

Water at 90°F and 50 psig is flowing through a 10-inch diameter pipe at 100 lbm/sec. The pipe then splits into two pipes, a 4-inch diameter pipe and an 8-inch diameter pipe.

Disregarding any flow restrictions other than pipe size, which one of the following lists the approximate flow rates through the 4-inch and 8-inch diameter pipes? (Assume that water velocity is the same in each pipe.)

	4-inch Pipe (lbm/sec)	8-inch Pipe (lbm/sec)
A.	20	80
B.	25	75
C.	30	70
D.	33	67

ANSWER: A.

TOPIC: 293006
KNOWLEDGE: K1.29 [2.6/2.7]
QID: B2381 (P2379)

A 60 gpm leak to atmosphere has developed from a cooling water system that is operating at 150 psig. Which one of the following will be the approximate leak rate when system pressure has decreased to 100 psig?

A. 27 gpm

B. 35 gpm

C. 40 gpm

D. 49 gpm

ANSWER: D.

TOPIC: 293006
KNOWLEDGE: K1.29 [2.6/2.7]
QID: B2479 (P2481)

Water at 90°F and 50 psig is flowing through a 10-inch diameter pipe at 100 lbm/sec. The pipe then splits into two pipes, a 3-inch diameter pipe and a 6-inch diameter pipe.

Disregarding any flow restrictions other than pipe size, which one of the following lists the approximate flow rates through the 3-inch and 6-inch diameter pipes. (Assume that water velocity is the same in each pipe.)

	3-inch Pipe (lbm/sec)	6-inch Pipe (lbm/sec)
A.	10	90
B.	20	80
C.	25	75
D.	33	67

ANSWER: B.

TOPIC: 293006
KNOWLEDGE: K1.29 [2.6/2.7]
QID: B2581 (P2582)

Water at 90°F and 50 psig is flowing through a 10-inch diameter pipe at 100 lbm/sec. The pipe then splits into two pipes, a 6-inch diameter pipe and an 8-inch diameter pipe.

Disregarding any flow restrictions other than pipe size, which one of the following lists the approximate flow rates through the 6-inch and 8-inch diameter pipes? (Assume that water velocity is the same in each pipe.)

	6-inch Pipe (lbm/sec)	8-inch Pipe (lbm/sec)
A.	24	76
B.	32	68
C.	36	64
D.	40	60

ANSWER: C.

TOPIC: 293006
KNOWLEDGE: K1.29 [2.6/2.7]
QID: B2781 (P2779)

An 80 gpm leak to atmosphere has developed from a cooling water system that is operating at 150 psig. Which one of the following will be the approximate leak rate when system pressure has decreased to 75 psig?

A. 20 gpm

B. 40 gpm

C. 49 gpm

D. 57 gpm

ANSWER: D.

TOPIC: 293006
KNOWLEDGE: K1.29 [2.6/2.7]
QID: B2981 (P1679)

A 100 gpm leak to atmosphere has developed from a cooling water system that is operating at 60 psig. Which one of the following will be the approximate leak rate when system pressure has decreased to 20 psig?

A. 33 gpm

B. 53 gpm

C. 58 gpm

D. 71 gpm

ANSWER: C.

TOPIC: 293006
KNOWLEDGE: K1.29 [2.6/2.7]
QID: B3181 (P3080)

A 75 gpm leak to atmosphere has developed from a cooling water system that is operating at 100 psig. Which one of the following will be the approximate leak rate when system pressure has decreased to 80 psig?

A. 26 gpm

B. 39 gpm

C. 56 gpm

D. 67 gpm

ANSWER: D.

TOPIC: 293006
KNOWLEDGE: K1.29 [2.6/2.7]
QID: B3581

A reactor shutdown will be performed because of leakage from the main condenser cooling water system into the main condenser through a failed tube.

Given the following initial conditions:

- Main condenser pressure is 1.0 psia.
- Atmospheric pressure is 15 psia.
- Main condenser cooling water pressure at the location of the tube leak is 10 psig.
- Cooling water leak rate into the main condenser is 100 gpm.

If the main condenser is brought to atmospheric pressure, with no changes to the main condenser cooling water system parameters, what will be the approximate rate of cooling water leakage into the main condenser?

A. 17 gpm

B. 28 gpm

C. 42 gpm

D. 65 gpm

ANSWER: D.

TOPIC: 293006 (Also 291002K1.01)
KNOWLEDGE: K1.29 [2.6/2.7]
QID: B4242 (P4243)

Refer to the drawing of a venturi in a main steam line (see figure below). The venturi inlet and outlet pipe diameters are equal.

A main steam line break downstream of the venturi causes the main steam mass flow rate through the venturi to increase. Soon, the steam reaches sonic velocity in the throat of the venturi.

How will the main steam mass flow rate through the venturi be affected as the steam pressure downstream of the venturi continues to decrease?

A. It will continue to increase at a rate that is dependent on the steam velocity in the throat of the venturi.

B. It will continue to increase at a rate that is dependent on the differential pressure (P1 - P2) across the venturi.

C. It will <u>not</u> continue to increase because the steam velocity <u>cannot</u> increase above sonic velocity in the throat of the venturi.

D. It will <u>not</u> continue to increase because the differential pressure (P1 - P2) across the venturi <u>cannot</u> increase further once the steam reaches sonic velocity in the throat of the venturi.

ANSWER: C.

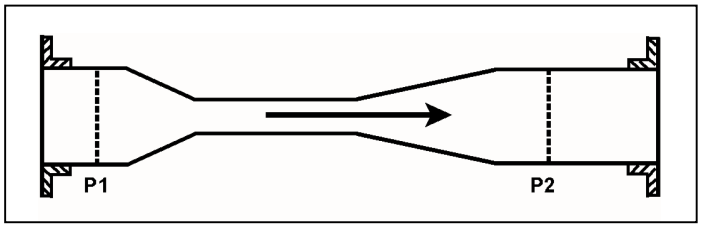

TOPIC: 293006
KNOWLEDGE: K1.29 [2.6/2.7]
QID: B4542 (P4543)

Refer to the drawing of a main water header that splits into two parallel headers (see figure below).

Header A has a 2-inch diameter and header B has a 3-inch diameter. The velocity of the water in both headers is the same.

If the main water header has a flow rate of 500 gpm, what is the approximate flow rate in each of the parallel headers?

	Header A (gpm)	Header B (gpm)
A.	125	375
B.	154	346
C.	200	300
D.	222	278

ANSWER: B.

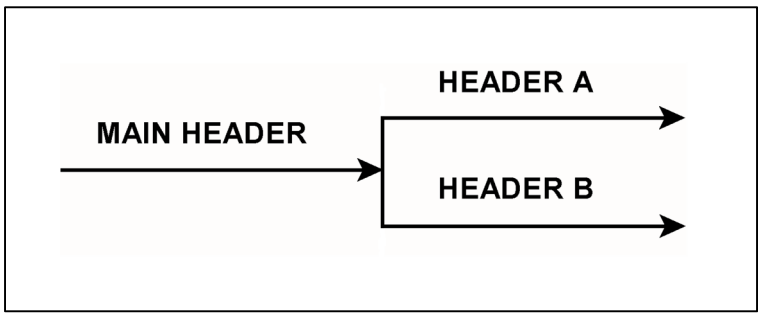

TOPIC: 293006
KNOWLEDGE: K1.29 [2.6/2.7]
QID: B4642 (P4643)

A length of pipe in a cooling water system uses a reducer fitting to decrease the pipe diameter from 6 inches to 4 inches. The flow rate in the 6-inch diameter section of pipe is 200 gpm. What is the flow rate in the 4-inch diameter section of pipe?

A. 133 gpm

B. 200 gpm

C. 300 gpm

D. 450 gpm

ANSWER: B.

TOPIC: 293006
KNOWLEDGE: K1.29 [2.6/2.7]
QID: B5342 (P5342)

A heat exchanger has the following <u>initial</u> cooling water inlet temperature and differential pressure (ΔP) parameters:

Inlet Temperature = 70°F
Heat Exchanger ΔP = 10 psi

Six hours later, the <u>current</u> heat exchanger cooling water parameters are:

Inlet Temperature = 85°F
Heat Exchanger ΔP = 10 psi

In comparison to the initial cooling water mass flow rate, the current mass flow rate is...

A. lower, because the density of the cooling water has decreased.

B. higher, because the velocity of the cooling water has increased.

C. the same, because the changes in cooling water velocity and density offset.

D. the same, because the heat exchanger cooling water ΔP is the same.

ANSWER: A.

TOPIC: 293006
KNOWLEDGE: K1.29 [2.6/2.7]
QID: B5542 (P5543)

A vented water storage tank contains 60 feet of water at 70°F. A cracked weld at the bottom of the tank results in a leak rate of 12 gpm. If makeup water flow rate is 5 gpm, at what water level will the tank stabilize?

A. 38.7 feet

B. 25.0 feet

C. 10.4 feet

D. 0.0 feet

ANSWER: C.

TOPIC: 293006
KNOWLEDGE: K1.29 [2.6/2.7]
QID: B5942 (P5943)

A vented water storage tank contains 64 feet of water at 70°F. A cracked weld at the bottom of the tank results in a leak rate of 12 gpm. At what water level will the leak rate be 3 gpm?

A. 48 feet

B. 32 feet

C. 16 feet

D. 4 feet

ANSWER: D.

TOPIC: 293006
KNOWLEDGE: K1.29 [2.6/2.7]
QID: B6142 (P6143)

A plant shutdown will be performed because of leakage from the main condenser cooling water system into the main condenser via a tube leak.

Given the following initial conditions:

- Main condenser pressure is 1.7 psia.
- Atmospheric pressure is 14.7 psia
- Main condenser cooling water pressure at the location of the tube leak is 18 psig.
- Cooling water leak rate into the main condenser is 80 gpm.

If the main condenser is brought to atmospheric pressure, with no changes to the main condenser cooling water system parameters, what will be the approximate rate of cooling water leakage into the main condenser?

A. 36 gpm

B. 52 gpm

C. 61 gpm

D. 72 gpm

ANSWER: C.

TOPIC: 293006
KNOWLEDGE: K1.29 [2.6/2.7]
QID: B6542 (P6543)

An ideal positive displacement pump is operating in an open system with the following initial parameters:

Suction pressure = 10 psig
Discharge pressure = 25 psig
Flow rate = 100 gpm

If the pump discharge pressure increases to 40 psig, the pump flow rate will...

A. remain constant.

B. decrease in direct proportion to the change in pump differential pressure.

C. decrease in direct proportion to the square of the change in pump differential pressure.

D. decrease in direct proportion to the square root of the change in pump differential pressure.

ANSWER: A.

TOPIC: 293006
KNOWLEDGE: K1.29 [2.6/2.7]
QID: B6742 (P6743)

A centrifugal pump is operating at a constant speed in a closed system with the following initial parameters:

Suction pressure = 10 psig
Discharge pressure = 25 psig
Pump flow rate = 500 gpm

If the pump discharge flow control valve is throttled such that the pump discharge pressure increases to 40 psig, the change in pump flow rate will be...

A. directly proportional to the square of the change in pump differential pressure.

B. directly proportional to the square root of the change in pump differential pressure.

C. inversely proportional to the square root of the change in pump differential pressure.

D. impossible to determine from the provided information.

ANSWER: D.

TOPIC: 293006
KNOWLEDGE: K1.29 [2.6/2.7]
QID: B6842 (P6843)

Refer to the drawing of a venturi in a steam line (see figure below). The venturi inlet and outlet pipe diameters at P1 and P2 are equal.

Currently, steam is flowing through the venturi, reaching sonic velocity in the throat of the venturi. If the steam inlet pressure (P1) remains constant while the downstream pressure (P2) decreases, the mass flow rate of the steam will _____; and the velocity of the steam at the venturi outlet will _____.

A. increase; increase

B. increase; remain the same

C. remain the same; increase

D. remain the same; remain the same

ANSWER: C.

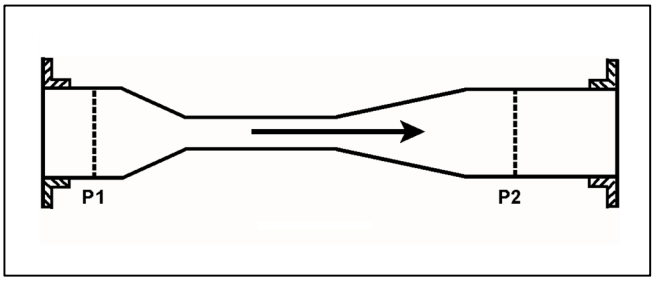

TOPIC: 293006
KNOWLEDGE: K1.29 [2.6/2.7]
QID: B7142

The following are current parameter values for an operating nuclear power plant:

Reactor vessel (RV) pressure = 1,000 psia
Main feed pump (MFP) discharge pressure = 1,220 psia

If RV pressure does not change, which one of the following MFP discharge pressures will increase main feedwater mass flow rate by 10 percent? (Assume MFP inlet temperature remains the same. Also, assume all valves/components that contribute to head loss downstream of the MFP remain in their current configuration.)

A. 1,242 psia

B. 1,266 psia

C. 1,293 psia

D. 1,342 psia

ANSWER: B.

TOPIC: 293006
KNOWLEDGE: K1.29 [2.6/2.7]
QID: B7342 (P7342)

An 80 gpm leak to atmosphere has developed from a cooling water system that is operating at 150 psig. Which one of the following will be the approximate leak rate when system pressure has decreased to 100 psig?

A. 70 gpm

B. 65 gpm

C. 53 gpm

D. 47 gpm

ANSWER: B.

TOPIC: 293006
KNOWLEDGE: K1.29 [2.6/2.7]
QID: B7542 (P7543)

Which one of the following will increase the head loss occurring in an operating cooling water system?

A. Shifting two heat exchangers from parallel to series operation.

B. Increasing the flow rate in the system by throttling open a flow control valve.

C. Replacing a 20 foot section of 10-inch diameter pipe with a 10 foot section of 10-inch diameter pipe.

D. Replacing a 20 foot section of 10-inch diameter pipe with a 20 foot section of 12-inch diameter pipe.

ANSWER: A.

TOPIC: 293006
KNOWLEDGE: K1.29 [2.6/2.7]
QID: B7660 (P7660)

Which one of the following will decrease the head loss occurring in an operating cooling water system?

A. Shifting two heat exchangers from parallel to series operation.

B. Increasing the flow rate in the system by positioning a flow control valve more open.

C. Replacing a 10 foot length of 10-inch diameter pipe with a 20 foot length of 10-inch diameter pipe.

D. Replacing a 20 foot length of 12-inch diameter pipe with a 20 foot length of 10-inch diameter pipe.

ANSWER: B.

TOPIC: 293006
KNOWLEDGE: K1.29 [2.6/2.7]
QID: B7669 (P7669)

Refer to the drawing of a main water header that splits into two parallel headers (see figure below).

Header A has a 2-inch diameter and header B has a 4-inch diameter. The velocity of the water in both headers is the same.

If the main water header has a flow rate of 500 gpm, what is the approximate flow rate in each of the parallel headers?

	Header A (gpm)	Header B (gpm)
A.	100	400
B.	125	375
C.	167	333
D.	200	300

ANSWER: A.

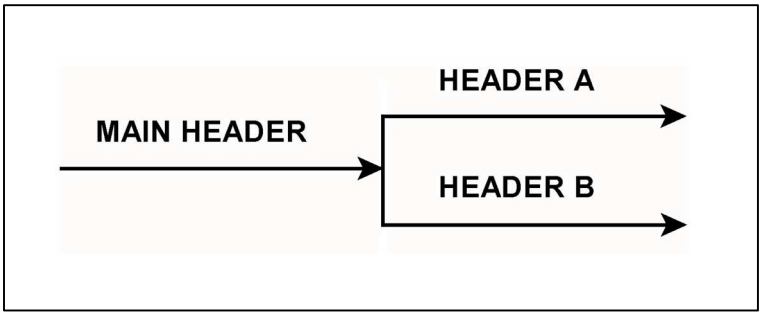

TOPIC: 293006
KNOWLEDGE: K1.29 [2.6/2.7]
QID: B7710 (P7710)

A vented water storage tank contains 30 feet of water at 70°F. A cracked weld at the bottom of the tank causes an initial leak rate of 12 gpm. If makeup water flow rate is 8 gpm, at what water level will the tank stabilize?

A. 24.5 feet

B. 20.0 feet

C. 13.3 feet

D. 0.0 feet

ANSWER: C.

TOPIC: 293007
KNOWLEDGE: K1.01 [3.2/3.2]
QID: B87

The dominant mode of heat transfer that occurs when film boiling is present is...

A. convection.

B. radiation.

C. conduction.

D. induction.

ANSWER: B.

TOPIC: 293007
KNOWLEDGE: K1.01 [3.2/3.2]
QID: B144

The heat transfer mode that uses direct contact transfer of kinetic energy from molecular motion is...

A. radiation.

B. convection.

C. transmission.

D. conduction.

ANSWER: D.

TOPIC: 293007
KNOWLEDGE: K1.01 [3.2/3.2]
QID: B188

Which one of the following methods of heat transfer is defined as the exchange of energy between bodies through an intervening space by means of electromagnetic waves?

A. Conduction

B. Convection

C. Electrokinetics

D. Radiation

ANSWER: D.

TOPIC: 293007
KNOWLEDGE: K1.01 [3.2/3.2]
QID: B285

The heat transfer mode that accounts for the <u>majority</u> of core heat removal during a loss of coolant accident after total core voiding is...

A. conduction.

B. convection.

C. radiolysis.

D. radiation.

ANSWER: D.

TOPIC: 293007
KNOWLEDGE: K1.01 [3.2/3.2]
QID: B482

The primary mode of heat transfer from the fuel cladding surface during steam blanketing conditions is...

A. radiation.

B. convection.

C. ionization.

D. conduction.

ANSWER: A.

TOPIC: 293007
KNOWLEDGE: K1.01 [3.2/3.2]
QID: B882 (P584)

Refer to the drawing of a fuel rod and coolant flow channel at the beginning of a fuel cycle (see figure below).

Which one of the following is the primary method of heat transfer through the gap between the fuel pellets and the fuel cladding?

A. Conduction

B. Convection

C. Radiation

D. Natural circulation

ANSWER: A.

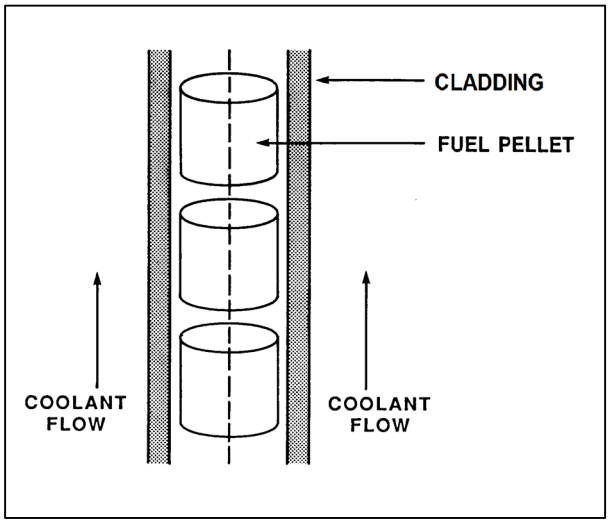

TOPIC: 293007
KNOWLEDGE: K1.01 [3.2/3.2]
QID: B1282

The dominant mode of heat transfer from the fuel-clad surface to the coolant during 100 percent power operation is...

A. radiation.

B. conduction.

C. forced convection.

D. natural convection.

ANSWER: C.

TOPIC: 293007
KNOWLEDGE: K1.01 [3.2/3.2]
QID: B1582

During nuclear power plant operation at 100 percent power, which one of the following is the major mode of heat transfer occurring as steam travels from the reactor vessel to the main turbine?

A. Radiolysis

B. Radiation

C. Conduction

D. Convection

ANSWER: D.

TOPIC: 293007
KNOWLEDGE: K1.01 [3.2/3.2]
QID: B1982 (P985)

Reactor fuel rods are normally charged with _____ gas; which improves heat transfer by _____.

A. helium; convection

B. helium; conduction

C. nitrogen; convection

D. nitrogen; conduction

ANSWER: B.

TOPIC: 293007
KNOWLEDGE: K1.01 [3.2/3.2]
QID: B2282

Which one of the following describes a heat transfer process in which convection is the dominant mode of heat transfer?

A. From the reactor fuel to the core barrel during core uncovery.

B. Through the tube walls in a main condenser during normal operation at 100 percent power.

C. From the reactor fuel to the steam outlet of the reactor vessel during a station blackout.

D. From the fuel pellet centerline to the fuel clad during normal operation at 100 percent power.

ANSWER: C.

TOPIC: 293007
KNOWLEDGE: K1.01 [3.2/3.2]
QID: B2882 (P2884)

Which one of the following describes a heat transfer flow path in which conduction is the dominant mode of heat transfer?

A. From the fuel rods to the core barrel during core uncovery.

B. From the main turbine exhaust steam to the atmosphere via main condenser cooling water and a cooling tower during normal operation.

C. From the fuel rods to the steam outlet of the reactor vessel during a station blackout.

D. From a fuel pellet to the fuel cladding via the fuel rod fill gas during normal operation.

ANSWER: D.

TOPIC: 293007
KNOWLEDGE: K1.02 [2.4/2.6]
QID: B1185

In an operating cooling water system, an increased stagnant fluid film thickness _____ heat transfer because conduction heat transfer is _____ efficient than convective heat transfer.

A. enhances; more

B. enhances; less

C. inhibits; more

D. inhibits; less

ANSWER: D.

TOPIC: 293007
KNOWLEDGE: K1.02 [2.4/2.6]
QID: B1682

The buildup of fission product gases in a fuel rod causes the thermal conductivity of the fuel pellets to _____ and the thermal conductivity of the fill gas to _____.

A. decrease; decrease

B. decrease; increase

C. increase; decrease

D. increase; increase

ANSWER: A.

TOPIC: 293007
KNOWLEDGE: K1.02 [2.4/2.6]
QID: B2582

Which one of the following has the highest thermal conductivity value?

A. Fuel pellet

B. Fuel clad

C. Fuel rod fill gas

D. Fission product gases

ANSWER: B.

TOPIC: 293007
KNOWLEDGE: K1.03 [2.7/2.8]
QID: B86

The order of reactor coolant heat transfer modes, from the most efficient to the least efficient, is...

A. nucleate boiling, transition boiling, stable film boiling.

B. stable film boiling, nucleate boiling, transition boiling.

C. nucleate boiling, stable film boiling, transition boiling.

D. stable film boiling, transition boiling, nucleate boiling.

ANSWER: A.

TOPIC: 293007
KNOWLEDGE: K1.03 [2.7/2.8]
QID: B286

As fluid flow rate decreases through the tubes of a shell-and-tube heat exchanger, the laminar film thickness _____, which causes the heat transfer rate to _____.

A. increases; decrease

B. increases; increase

C. decreases; decrease

D. decreases; increase

ANSWER: A.

TOPIC: 293007
KNOWLEDGE: K1.03 [2.7/2.8]
QID: B1483

Which one of the following is the order of reactor coolant heat transfer modes, from the least efficient to the most efficient?

A. Film boiling, single-phase convection, nucleate boiling

B. Film boiling, nucleate boiling, single-phase convection

C. Single-phase convection, nucleate boiling, film boiling

D. Single-phase convection, film boiling, nucleate boiling

ANSWER: A.

TOPIC: 293007
KNOWLEDGE: K1.03 [2.7/2.8]
QID: B2782

The order of reactor coolant heat transfer modes, from the least efficient to the most efficient, is...

A. transition boiling, stable film boiling, nucleate boiling.

B. transition boiling, nucleate boiling, stable film boiling.

C. stable film boiling, nucleate boiling, transition boiling.

D. stable film boiling, transition boiling, nucleate boiling.

ANSWER: D.

TOPIC: 293007
KNOWLEDGE: K1.06 [2.7/2.8]
QID: B149

Which one of the following describes parallel and/or counter-flow heat exchangers?

A. Counter-flow heat exchangers are more efficient than parallel-flow heat exchangers due to the high initial ΔT.

B. Counter-flow heat exchangers allow the exiting cooled fluid temperature to be below the exiting cooling fluid temperature.

C. Parallel-flow heat exchangers are more efficient than counter-flow heat exchangers due to the high initial ΔT.

D. Parallel-flow heat exchangers allow the exiting cooled fluid temperature to be below the exiting cooling fluid temperature.

ANSWER: B.

TOPIC: 293007
KNOWLEDGE: K1.06 [2.7/2.8]
QID: B199

Which one of the following equations is representative of the heat transfer rate across the tubes of a heat exchanger?

Where:

h_t = fluid enthalpy inside tubes
h_{ss} = fluid enthalpy on heat exchanger shell side
T_t = fluid temperature inside tubes
T_{ss} = fluid temperature on heat exchanger shell side

A. $\dot{Q} = \dot{m}c_p(h_t - h_{ss})$

B. $\dot{Q} = UA(h_t - h_{ss})$

C. $\dot{Q} = \dot{m}c_p(T_t - T_{ss})$

D. $\dot{Q} = UA(T_t - T_{ss})$

ANSWER: D.

TOPIC: 293007
KNOWLEDGE: K1.06 [2.7/2.8]
QID: B1083

A counterflow lube oil heat exchanger is in operation when the cooling water flow rate is reduced to one-half its original value. Which one of the following will decrease as a result?

A. Lube oil outlet temperature

B. Cooling water outlet temperature

C. Lube oil differential temperature

D. Cooling water differential temperature

ANSWER: C.

TOPIC: 293007
KNOWLEDGE: K1.06 [2.7/2.8]
QID: B1283

Which one of the following equations includes the heat transfer coefficient of the tubes in a heat exchanger?

A. $\dot{Q} = \dot{m}\Delta h$

B. $\dot{Q} = \dot{m}\Delta T$

C. $\dot{Q} = \dot{m}c_p\Delta T$

D. $\dot{Q} = UA\Delta T$

ANSWER: D.

TOPIC: 293007
KNOWLEDGE: K1.06 [2.7/2.8]
QID: B1782

Refer to the drawing of a lube oil heat exchanger (see figure below).

The lube oil heat exchanger is in operation when the cooling water flow rate is increased to twice its former value. Which one of the following will increase as a result?

A. Lube oil outlet temperature

B. Cooling water outlet temperature

C. Lube oil differential temperature

D. Cooling water differential temperature

ANSWER: C.

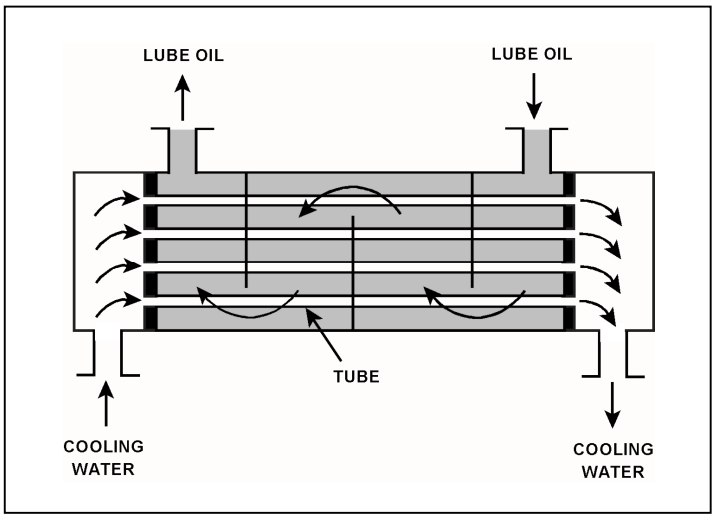

TOPIC: 293007
KNOWLEDGE: K1.06 [2.7/2.8]
QID: B2583

During a nuclear power plant outage, 6 percent of the main condenser tubes were plugged. The following 100 percent power conditions existed before the outage:

Main condenser pressure	=	1.1 psia
Cooling water inlet temperature	=	60°F
Cooling water outlet temperature	=	86°F

After the outage, the plant was returned to 100 percent power. The following 100 percent power conditions existed after the outage:

Main condenser pressure	=	1.2 psia
Cooling water inlet temperature	=	60°F
Cooling water outlet temperature	=	?

If the total heat transfer rate in the main condenser is the same, which one of the following will be the approximate final cooling water outlet temperature?

A. 86°F

B. 88°F

C. 90°F

D. 92°F

ANSWER: B.

TOPIC: 293007
KNOWLEDGE: K1.06 [2.7/2.8]
QID: B3082 (P3034)

Refer to the drawing of a lube oil heat exchanger (see figure below).

Given the following heat exchanger parameters:

- Lube oil flow rate is 200 lbm/min.
- Lube oil enters the heat exchanger at 140°F.
- Lube oil leaves the heat exchanger at 100°F.
- Specific heat of the lube oil is 0.8 Btu/lbm-°F.
- Cooling water flow rate is 400 lbm/min.
- Cooling water enters the lube oil heat exchanger at 60°F.
- Specific heat of the cooling water is 1.0 Btu/lbm-°F.

What is the approximate temperature of the cooling water leaving the lube heat exchanger?

A. 76°F

B. 85°F

C. 92°F

D. 124°F

ANSWER: A.

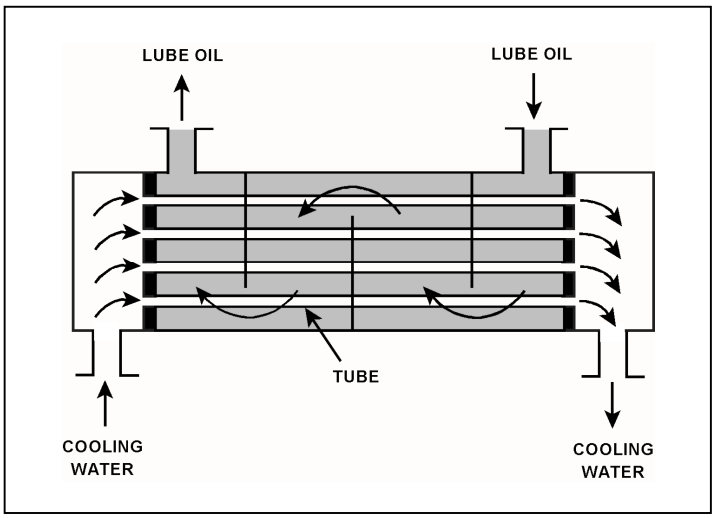

TOPIC: 293007
KNOWLEDGE: K1.06 [2.7/2.8]
QID: B6143 (P6116)

A counter-flow heat exchanger is being used to cool the lube oil for a main turbine and generator.

The main turbine and generator was initially operating at 100 percent load with the following stable heat exchanger conditions:

$T_{oil\ in}$ = 174°F
$T_{oil\ out}$ = 114°F
$T_{water\ in}$ = 85°F
$T_{water\ out}$ = 115°F

Main turbine and generator load was reduced, and the heat exchanger cooling water mass flow rate was decreased to one-half of its initial value, resulting in the following stable current conditions:

$T_{oil\ in}$ = 178°F
$T_{oil\ out}$ = 138°F
$T_{water\ in}$ = 85°F
$T_{water\ out}$ = ?

Assume that the lube oil mass flow rate and the specific heats of both fluids did <u>not</u> change.

Which one of the following is the current cooling water outlet temperature?

A. 115°F

B. 125°F

C. 135°F

D. 145°F

ANSWER: B.

TOPIC: 293007
KNOWLEDGE: K1.07 [2.7/2.9]
QID: B484

Excessive amounts of entrained gases passing through a single-phase (liquid) heat exchanger are undesirable because...

A. flow blockage can occur in the heat exchanger.

B. the laminar layer will increase in the heat exchanger.

C. the heat exchanger heat transfer coefficient will increase.

D. the temperature difference across the heat exchanger tubes will decrease.

ANSWER: A.

TOPIC: 293007
KNOWLEDGE: K1.07 [2.7/2.9]
QID: B1882 (P1184)

Why is bulk boiling in the tubes of a single-phase heat exchanger undesirable?

A. The bubble formation will break up the laminar layer in the heat exchanger tubes.

B. The thermal conductivity of the heat exchanger tubes will decrease.

C. The differential temperature across the tubes will decrease through the heat exchanger.

D. The turbulence will restrict fluid flow through the heat exchanger tubes.

ANSWER: D.

TOPIC: 293007
KNOWLEDGE: K1.07 [2.7/2.9]
QID: B2184 (P2184)

Which one of the following pairs of fluids undergoing heat transfer in similar cross-flow heat exchangers will yield the greatest heat exchanger overall heat transfer coefficient? (Assume comparable heat exchanger sizes and fluid flow rates.)

A. Oil to water in a lube oil cooler.

B. Air to water in an air compressor after-cooler.

C. Steam to water in a turbine exhaust steam condenser.

D. Water to water in a cooling water heat exchanger.

ANSWER: C.

TOPIC: 293007
KNOWLEDGE: K1.07 [2.7/2.9]
QID: B2383 (P2384)

Which one of the following pairs of fluids undergoing heat transfer in similar cross-flow design heat exchangers will yield the smallest heat exchanger overall heat transfer coefficient? (Assume comparable heat exchanger sizes and fluid flow rates.)

A. Oil to water in a lube oil cooler.

B. Air to water in an air compressor after-cooler.

C. Steam to water in a turbine exhaust steam condenser.

D. Water to water in a cooling water heat exchanger.

ANSWER: B.

TOPIC: 293007
KNOWLEDGE: K1.07 [2.7/2.9]
QID: B3084 (P3084)

A nuclear power plant is operating near 100 percent power. Main turbine extraction steam is being supplied to a feedwater heater. Extraction steam parameters are as follows:

Steam pressure = 414 psia
Steam flow rate = 7.5×10^5 lbm/hr
Steam enthalpy = 1,150 Btu/lbm

The extraction steam condenses to saturated water at 414 psia, and then leaves the feedwater heater via a drain line.

What is the heat transfer rate from the extraction steam to the feedwater in the feedwater heater?

A. 3.8×10^7 Btu/hr

B. 8.6×10^7 Btu/hr

C. 5.4×10^8 Btu/hr

D. 7.2×10^8 Btu/hr

ANSWER: C.

TOPIC: 293007
KNOWLEDGE: K1.07 [2.7/2.9]
QID: B3383 (P3384)

A nuclear power plant is initially operating at a steady-state power level with the following main condenser parameters:

Main condenser pressure = 1.2 psia
Cooling water inlet temperature = 60°F
Cooling water outlet temperature = 84°F

Due to increased condenser air inleakage, the overall heat transfer coefficient of the main condenser decreases by 25 percent. Main condenser heat transfer rate and cooling water temperatures are unchanged. Which one of the following is the steady-state main condenser pressure resulting from the reduced heat transfer coefficient?

A. 1.7 psia

B. 2.3 psia

C. 3.0 psia

D. 4.6 psia

ANSWER: A.

TOPIC: 293007
KNOWLEDGE: K1.07 [2.7/2.9]
QID: B3684 (P3684)

Which one of the following pairs of fluids undergoing heat transfer in similar cross-flow design heat exchangers will yield the <u>greatest</u> heat exchanger overall heat transfer coefficient? (Assume comparable heat exchanger sizes and fluid flow rates.)

A. Oil to water in a lube oil cooler.

B. Steam to water in a feedwater heater.

C. Water to air in a ventilation cooling unit.

D. Water to water in a cooling water heat exchanger.

ANSWER: B.

TOPIC: 293007
KNOWLEDGE: K1.07 [2.7/2.9]
QID: B5143 (P5144)

A nuclear power plant is operating near 100 percent power. Main turbine extraction steam is being supplied to a feedwater heater. Extraction steam parameters are as follows:

Steam pressure = 500 psia
Steam flow rate = 7.0×10^5 lbm/hr
Steam enthalpy = 1,135 Btu/lbm

The extraction steam condenses to saturated water at 500 psia, and then leaves the feedwater heater via a drain line.

What is the heat transfer rate from the extraction steam to the feedwater in the feedwater heater?

A. 3.2×10^8 Btu/hr

B. 4.8×10^8 Btu/hr

C. 5.3×10^8 Btu/hr

D. 7.9×10^8 Btu/hr

ANSWER: B.

TOPIC: 293007
KNOWLEDGE: K1.08 [3.0/3.1]
QID: B378

Which one of the following actions will <u>decrease</u> nuclear power plant efficiency?

A. Reducing the turbine inlet steam moisture content.

B. Reducing the condensate depression.

C. Increasing the turbine exhaust pressure.

D. Increasing the temperature of the feedwater entering the reactor vessel.

ANSWER: C.

TOPIC: 293007
KNOWLEDGE: K1.08 [3.0/3.1]
QID: B1585

Which one of the following actions will increase nuclear power plant efficiency?

A. Increasing the turbine inlet steam moisture content.

B. Increasing the condensate depression.

C. Decreasing the turbine exhaust pressure.

D. Decreasing the temperature of the feedwater entering the reactor vessel.

ANSWER: C.

TOPIC: 293007
KNOWLEDGE: K1.09 [2.5/2.7]
QID: B147

Which one of the following statements explains why condensate subcooling is necessary in the steam condensing phase of a nuclear power plant steam cycle?

A. To increase overall secondary efficiency.

B. To provide an improved condenser vacuum.

C. To allow use of a higher circulating water temperature.

D. To provide net positive suction head for the condensate pumps.

ANSWER: D.

TOPIC: 293007
KNOWLEDGE: K1.09 [2.5/2.7]
QID: B583

Which one of the following statements describes condensate depression in the main condenser?

A. Increasing condensate depression improves the available net positive suction head for the condensate pumps.

B. Decreasing condenser vacuum increases condensate depression.

C. Increasing circulating water temperature increases condensate depression.

D. Decreasing condensate depression decreases plant efficiency.

ANSWER: A.

TOPIC: 293007
KNOWLEDGE: K1.09 [2.5/2.7]
QID: B883

A steam condenser is operating with 28 inches of Hg vacuum and a condensate outlet temperature of 88°F. Which one of the following is the value of condensate depression?

A. 8°F

B. 14°F

C. 24°F

D. 38°F

ANSWER: B.

TOPIC: 293007
KNOWLEDGE: K1.09 [2.5/2.7]
QID: B1084

The purpose of condensate depression in a nuclear power plant steam cycle is to...

A. maximize condenser vacuum.

B. maximize total plant efficiency.

C. minimize cavitation of the condensate pumps.

D. minimize thermal gradients in the condenser hotwell.

ANSWER: C.

TOPIC: 293007
KNOWLEDGE: K1.09 [2.5/2.7]
QID: B2483

A steam condenser is operating with 28.5 inches of Hg vacuum and a condensate outlet temperature of 88°F. Which one of the following is the value of condensate depression?

A. 2°F

B. 9°F

C. 13°F

D. 17°F

ANSWER: A.

TOPIC: 293007
KNOWLEDGE: K1.10 [2.7/2.9]
QID: B684

The measure of heat input per unit time from the nuclear fuel to the reactor coolant in units of megawatts defines...

A. specific heat.

B. power density.

C. core thermal power.

D. percent reactor power.

ANSWER: C.

TOPIC: 293007
KNOWLEDGE: K1.11 [2.6/3.1]
QID: B385

Which one of the following is the most accurate indication of mass flow rate through a reactor for calculating core thermal power during reactor power operation?

A. Core flow rate

B. Steam flow rate

C. The sum of feedwater and control rod drive flow rates

D. The sum of both recirculation loop flow rates

ANSWER: C.

TOPIC: 293007
KNOWLEDGE: K1.11 [2.6/3.1]
QID: B984

Which one of the following expressions describes core thermal power?

A. $\dot{Q}_{Core} = \dot{Q}_{Feedwater} - \dot{Q}_{Steam} - \dot{Q}_{CRD} - \dot{Q}_{Recirc} + \dot{Q}_{Ambient} + \dot{Q}_{RWCU}$

B. $\dot{Q}_{Core} = \dot{Q}_{Steam} - \dot{Q}_{Feedwater} + \dot{Q}_{CRD} + \dot{Q}_{Recirc} - \dot{Q}_{Ambient} - \dot{Q}_{RWCU}$

C. $\dot{Q}_{Core} = \dot{Q}_{Steam} - \dot{Q}_{Feedwater} - \dot{Q}_{CRD} - \dot{Q}_{Recirc} + \dot{Q}_{Ambient} + \dot{Q}_{RWCU}$

D. $\dot{Q}_{Core} = \dot{Q}_{Steam} - \dot{Q}_{Feedwater} - \dot{Q}_{CRD} - \dot{Q}_{Recirc} - \dot{Q}_{Ambient} - \dot{Q}_{RWCU}$

ANSWER: C.

TOPIC: 293007
KNOWLEDGE: K1.11 [2.6/3.1]
QID: B2984 (P2985)

A reactor is operating at power. The feedwater flow rate to the reactor vessel is 7.0×10^6 lbm/hr at a temperature of 440°F. The steam exiting the reactor vessel is at 1,000 psia with 100 percent steam quality.

Ignoring all other heat gain and loss mechanisms, what is the core thermal power?

A. 1,335 MW

B. 1,359 MW

C. 1,589 MW

D. 1,612 MW

ANSWER: C.

TOPIC: 293007
KNOWLEDGE: K1.11 [2.6/3.1]
QID: B6843

When performing a heat balance calculation to determine core thermal power, the measured thermal power is _____ by a value associated with the recirculation pumps; the adjustment is needed because _____ of the flow energy added to the reactor coolant by the recirculation pumps is converted to thermal energy of the reactor coolant.

A. decreased; nearly all

B. decreased; a small fraction

C. increased; nearly all

D. increased; a small fraction

ANSWER: A.

TOPIC: 293007
KNOWLEDGE: K1.12 [2.6/3.1]
QID: B1384

Given the following data for a steam condenser:

Total tube area	= 500,000 ft^2
Cooling water flow rate	= 200,000 gpm
Condenser pressure	= 1.0 psia
Specific heat of cooling water (c_p)	= 1.0 Btu/lbm-°F
Cooling water inlet temperature	= 60°F
Cooling water outlet temperature	= 80°F
Steam condensing rate	= 3,000,000 lbm/hr
Mass of cooling water	= 8.34 lbm/gal

What is the condenser heat load (MW)?

A. 587 MW

B. 629 MW

C. 671 MW

D. 733 MW

ANSWER: A.

TOPIC: 293007
KNOWLEDGE: K1.13 [2.3/2.9]
QID: B150

Given the following data for a steam condenser:

Total tube area	=	500,000 ft^2
Cooling water flow rate	=	200,000 gpm
Condenser pressure	=	1.0 psia
Specific heat of cooling water (c_p)	=	1.0 Btu/lbm-°F
Cooling water inlet temperature	=	60°F
Cooling water outlet temperature	=	85°F
Steam condensing rate	=	3,000,000 lbm/hr
Mass of cooling water	=	8.34 lbm/gal

What is the condenser heat load (MW)?

A. 704 MW

B. 734 MW

C. 784 MW

D. 834 MW

ANSWER: B.

TOPIC: 293007
KNOWLEDGE: K1.13 [2.3/2.9]
QID: B386 (P384)

The power range nuclear instruments have been adjusted to 100 percent based on a heat balance calculation. Which one of the following will result in indicated reactor power being greater than actual reactor power?

A. The feedwater temperature used in the heat balance calculation was higher than actual feedwater temperature.

B. The reactor recirculation pump heat input term was omitted from the heat balance calculation.

C. The feedwater flow rate used in the heat balance calculation was lower than actual feedwater flow rate.

D. The steam pressure used in the heat balance calculation was higher than actual steam pressure.

ANSWER: B.

TOPIC: 293007
KNOWLEDGE: K1.13 [2.3/2.9]
QID: B1684 (P3944)

The power range nuclear instruments have been adjusted to 100 percent based on a calculated heat balance. Which one of the following will result in indicated reactor power being lower than actual reactor power?

A. The feedwater temperature used in the heat balance calculation was 10°F lower than actual feedwater temperature.

B. The reactor recirculation pump heat input term was omitted from the heat balance calculation.

C. The feedwater flow rate used in the heat balance calculation was 10 percent lower than actual feedwater flow rate.

D. The steam pressure used in the heat balance calculation was 50 psi lower than actual steam pressure.

ANSWER: C.

TOPIC: 293007
KNOWLEDGE: K1.13 [2.3/2.9]
QID: B2183 (P2185)

The power range nuclear instruments have been adjusted to 100 percent based on a heat balance calculation. Which one of the following will result in indicated reactor power being lower than actual reactor power?

A. The feedwater temperature used in the heat balance calculation was 20°F higher than actual feedwater temperature.

B. The reactor recirculation pump heat input term was omitted from the heat balance calculation.

C. The feedwater flow rate used in the heat balance calculation was 10 percent higher than actual feedwater flow rate.

D. The steam pressure used in the heat balance calculation was 50 psi lower than actual steam pressure.

ANSWER: A.

TOPIC: 293007
KNOWLEDGE: K1.13 [2.3/2.9]
QID: B2284 (P2685)

The power range nuclear instruments have been adjusted to 100 percent based on a calculated heat balance. Which one of the following will result in indicated reactor power being lower than actual reactor power?

A. The feedwater temperature used in the heat balance calculation was 20°F higher than actual feedwater temperature.

B. The reactor recirculation pump heat input value used in the heat balance was 10 percent lower than actual reactor recirculation pump heat input.

C. The feedwater flow rate used in the heat balance calculation was 10 percent higher than actual feedwater flow rate.

D. The operator miscalculated the enthalpy of the steam exiting the reactor vessel to be 10 Btu/lbm higher than actual.

ANSWER: A.

TOPIC: 293007
KNOWLEDGE: K1.13 [2.3/2.9]
QID: B2484

The power range nuclear instruments have been adjusted to 100 percent based on a calculated heat balance. Which one of the following will result in indicated reactor power being lower than actual reactor power?

A. The feedwater temperature used in the heat balance calculation was 20°F lower than actual feedwater temperature.

B. The reactor recirculation pump heat input term was omitted from the heat balance calculation.

C. The ambient heat loss value used in the heat balance calculation was only half the actual ambient heat loss.

D. The feedwater flow rates used in the heat balance calculation were 10 percent higher than actual flow rates.

ANSWER: C.

TOPIC: 293007
KNOWLEDGE: K1.13 [2.3/2.9]
QID: B2684 (P2485)

The power range nuclear instruments have been adjusted to 100 percent based on a heat balance calculation. Which one of the following will result in indicated reactor power being higher than actual reactor power?

A. The feedwater temperature used in the heat balance calculation was 20°F higher than actual feedwater temperature.

B. The reactor recirculation pump heat input term was omitted from the heat balance calculation.

C. The feedwater flow rate used in the heat balance calculation was 10 percent lower than actual feedwater flow rate.

D. The ambient heat loss term was omitted from the heat balance calculation.

ANSWER: B.

TOPIC: 293007
KNOWLEDGE: K1.13 [2.3/2.9]
QID: B2785

The power range nuclear instruments have been adjusted to 100 percent based on a calculated heat balance. Which one of the following will result in indicated reactor power being lower than actual reactor power?

A. The reactor recirculation pump heat input term was omitted from the heat balance calculation.

B. The feedwater temperature used in the heat balance calculation was 20°F lower than actual feedwater temperature.

C. The reactor vessel pressure used in the heat balance calculation was 30 psia higher than actual reactor vessel pressure.

D. The steam and feedwater flow rates used in the heat balance calculation were 10 percent higher than actual flow rates.

ANSWER: C.

TOPIC: 293007
KNOWLEDGE: K1.13 [2.3/2.9]
QID: B2884 (P137)

The power range nuclear instruments have been adjusted to 100 percent based on a calculated heat balance. Which one of the following will result in indicated reactor power being greater than actual reactor power?

A. The operator miscalculated the enthalpy of the feedwater to be 10 Btu/lbm higher than actual feedwater enthalpy.

B. The reactor recirculation pump heat input term was omitted from the heat balance calculation.

C. The steam and feedwater flow rates used in the heat balance calculation were 10 percent lower than actual flow rates.

D. The steam pressure used in the heat balance calculation was 50 psi higher than actual steam pressure.

ANSWER: B.

TOPIC: 293007
KNOWLEDGE: K1.13 [2.3/2.9]
QID: B5043

Two of the parameters listed below are used for calculating core thermal power using the standard heat balance method. Which one of the following identifies the two parameters?

	Reactor Core Mass Flow Rate	Feedwater Temperature	Reactor Vessel Pressure	Reactor Vessel Water Level
A.	Yes	No	Yes	No
B.	No	Yes	Yes	No
C.	Yes	No	No	Yes
D.	No	Yes	No	Yes

ANSWER: B.

TOPIC: 293007
KNOWLEDGE: K1.13 [2.3/2.9]
QID: B6043 (P6044)

The power range nuclear instruments have been adjusted to 100 percent based on a heat balance calculation. Which one of the following will result in indicated reactor power being higher than actual reactor power?

A. The steam pressure used in the heat balance calculation was 50 psi higher than actual steam pressure.

B. The ambient heat loss value used in the heat balance calculation was twice the actual ambient heat loss.

C. The feedwater flow rate used in the heat balance calculation was 10 percent lower than actual feedwater flow rate.

D. The feedwater temperature used in the heat balance calculation was 20°F higher than actual feedwater temperature.

ANSWER: B.

TOPIC: 293007
KNOWLEDGE: K1.13 [2.3/2.9]
QID: B7639

A nuclear power plant is operating with the following stable reactor vessel (RV) and feedwater (FW) parameters:

RV pressure = 1,000 psia
RV steam flow rate = 1.0×10^7 lbm/hr (dry, saturated steam)
FW inlet temperature = 470°F

Based on the above information, what is the thermal power output of the reactor?

A. 740 MW

B. 1,328 MW

C. 2,169 MW

D. 3,497 MW

ANSWER: C.

TOPIC: 293008
KNOWLEDGE: K1.01 [2.6/2.8]
QID: B88

The highest rate of heat transfer from the fuel rod surface to the coolant is provided by...

A. forced convection with subcooled coolant (no boiling).

B. natural convection with subcooled coolant (no boiling).

C. natural convection with bulk boiling of coolant.

D. forced convection with nucleate boiling.

ANSWER: D.

TOPIC: 293008
KNOWLEDGE: K1.01 [2.6/2.8]
QID: B89

The order of heat transfer modes for coolant flowing through a fuel bundle is...

A. nucleate boiling, single-phase convection, slug flow, annular flow.

B. nucleate boiling, single-phase convection, annular flow, slug flow.

C. single-phase convection, nucleate boiling, slug flow, annular flow.

D. single-phase convection, nucleate boiling, annular flow, slug flow.

ANSWER: C.

TOPIC: 293008
KNOWLEDGE: K1.01 [2.6/2.8]
QID: B389 (P286)

Which one of the following characteristics will enhance steam bubble formation in water adjacent to a heated surface?

A. Chemicals dissolved in the water.

B. The absence of ionizing radiation exposure to the water.

C. A highly polished heat transfer surface with minimal scratches or cavities.

D. The presence of gases dissolved in the water.

ANSWER: D.

TOPIC: 293008
KNOWLEDGE: K1.01 [2.6/2.8]
QID: B885

The dominant mode of heat transfer that occurs when nucleate boiling is present is...

A. convection.

B. radiation.

C. conduction.

D. induction.

ANSWER: A.

TOPIC: 293008
KNOWLEDGE: K1.01 [2.6/2.8]
QID: B986

Which one of the following describes convection heat transfer?

A. The flow of heat through a body or between bodies in direct contact.

B. The flow of heat between two different fluids not in direct contact.

C. The flow of heat from a body by electromagnetic waves across an intervening space.

D. The flow of heat between a fluid and surface by circulation of the fluid.

ANSWER: D.

TOPIC: 293008
KNOWLEDGE: K1.01 [2.6/2.8]
QID: B1183

Refer to the drawing of a pool boiling curve (see figure below). In which region(s) of the curve does a reactor normally operate to transfer heat from the fuel cladding to the coolant at 100 percent power?

A. Regions II and III

B. Region II only

C. Regions I and II

D. Region I only

ANSWER: C.

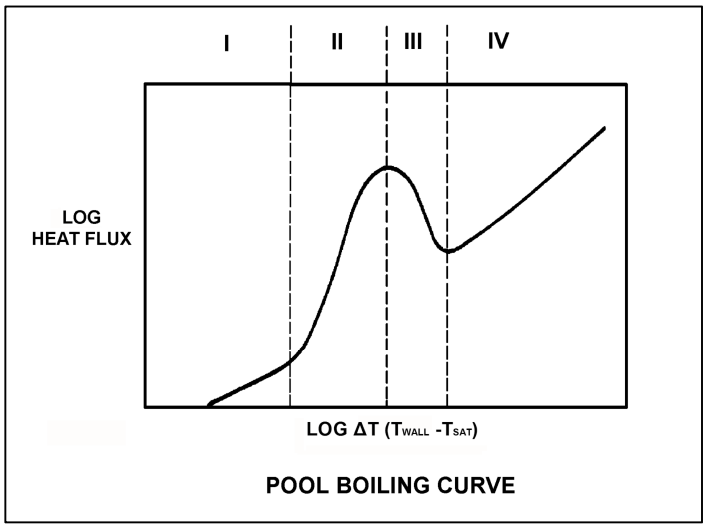

TOPIC: 293008
KNOWLEDGE: K1.01 [2.6/2.8]
QID: B1285 (P2787)

Which one of the following characteristics will enhance steam bubble formation in the coolant adjacent to a fuel rod?

A. Surface scratches or cavities in the fuel cladding.

B. Subsurface void defect in the fuel cladding.

C. Increased coolant velocity past the fuel rod.

D. Chemically inert material dissolved in the coolant.

ANSWER: A.

TOPIC: 293008
KNOWLEDGE: K1.01 [2.6/2.8]
QID: B2784 (P1086)

How does the convective heat transfer coefficient vary from the bottom to the top of a fuel assembly if reactor coolant enters the fuel assembly as subcooled water and exits as superheated steam?

A. Increases continuously.

B. Increases, then decreases.

C. Decreases continuously.

D. Decreases, then increases.

ANSWER: B.

TOPIC: 293008
KNOWLEDGE: K1.04 [2.6/2.7]
QID: B90

Boiling improves heat transfer because the...

A. agitation produced reduces the thickness of the fluid film, and the bubble formation removes the latent heat of vaporization from the heated surface.

B. bubbles produced reduce the turbulence in the bulk fluid flow and transfer the latent heat of condensation to the fluid as the steam bubbles collapse in the laminar fluid film.

C. velocity of the laminar fluid film past the heated surface increases causing the ΔT between the heated surface and the fluid film to increase.

D. velocity of the laminar fluid film near the heated surface decreases, causing the liquid contact time with the heated surface to increase.

ANSWER: A.

TOPIC: 293008
KNOWLEDGE: K1.04 [2.6/2.7]
QID: B486

Nucleate boiling occurring at the surface of a fuel rod...

A. increases the convective heat transfer from the fuel rod to the coolant.

B. decreases the convective heat transfer from the fuel rod to the coolant.

C. has no effect on convective heat transfer because it is boiling heat transfer.

D. causes damage to the fuel rod because it disrupts the laminar flow of coolant next to the fuel rod.

ANSWER: A.

TOPIC: 293008
KNOWLEDGE: K1.04 [2.6/2.7]
QID: B588 (P389)

Core heat transfer rate is maximized by the presence of...

A. laminar flow with no nucleate boiling.

B. turbulent flow with no nucleate boiling.

C. laminar flow with nucleate boiling.

D. turbulent flow with nucleate boiling.

ANSWER: D.

TOPIC: 293008
KNOWLEDGE: K1.04 [2.6/2.7]
QID: B1086 (P2287)

Which one of the following describes a reason for the increased heat transfer rate that occurs when nucleate boiling begins on the surface of a fuel rod?

A. Steam bubbles have a greater thermal conductivity than water.

B. The formation of steam bubbles increases coolant flow along the fuel rod.

C. Radiative heat transfer begins to supplement convective heat transfer.

D. The motion of the steam bubbles causes rapid mixing of the coolant.

ANSWER: D.

TOPIC: 293008
KNOWLEDGE: K1.04 [2.6/2.7]
QID: B1890 (P487)

Nucleate boiling enhances the convective heat transfer coefficient by _____ the thermal conductivity of the coolant and _____ the laminar layer thickness.

A. increasing; decreasing

B. increasing; increasing

C. decreasing; decreasing

D. decreasing; increasing

ANSWER: A.

TOPIC: 293008
KNOWLEDGE: K1.04 [2.6/2.7]
QID: B2385 (P2386)

Subcooled reactor coolant enters the bottom of a fuel assembly in a reactor operating at power. As the coolant flows upward through the fuel assembly, boiling occurs and the coolant exits the fuel assembly at the saturation temperature.

If the coolant had remained subcooled, average fuel temperature would have been _____ because boiling is a _____ efficient method of heat transfer.

A. higher; more

B. higher; less

C. lower; more

D. lower; less

ANSWER: A.

TOPIC: 293008
KNOWLEDGE: K1.04 [2.6/2.7]
QID: B2486 (P2686)

Case 1: Subcooled reactor coolant enters the bottom of a fuel assembly in a reactor operating at power. As the coolant flows upward through the fuel assembly, the water heats up and exits the fuel assembly still subcooled.

Case 2: Same as above except that reactor pressure is decreased such that the coolant begins to boil halfway up the fuel assembly, which results in a saturated steam-water mixture exiting the fuel assembly.

Assume that departure from nucleate boiling is avoided in both cases and that power level does not change. As compared to Case 1, the average fuel temperature for Case 2 will be _____ because boiling is a _____ efficient method of heat transfer.

A. higher; more

B. higher; less

C. lower; more

D. lower; less

ANSWER: C.

TOPIC: 293008
KNOWLEDGE: K1.04 [2.6/2.7]
QID: B2986 (P2986)

Subcooled reactor coolant enters the bottom of a fuel assembly and exits the top of the fuel assembly as a saturated steam-water mixture. How does the convective heat transfer coefficient change as the coolant travels upward through the fuel assembly?

A. Increases only

B. Increases, then decreases

C. Decreases only

D. Decreases, then increases

ANSWER: A.

TOPIC: 293008
KNOWLEDGE: K1.04 [2.6/2.7]
QID: B3785 (P3786)

Subcooled water enters a fuel assembly in a reactor operating at power. As the water flows upward through the fuel assembly, the water begins to boil and exits the fuel assembly as a saturated steam-water mixture.

If fuel assembly power is unchanged and system pressure is increased such that all of the water remains subcooled, the average fuel temperature in the fuel assembly would be _____ because boiling is a _____ efficient method of heat transfer.

A. higher; more

B. higher; less

C. lower; more

D. lower; less

ANSWER: A.

TOPIC: 293008
KNOWLEDGE: K1.04 [2.6/2.7]
QID: B5744 (P5745)

Initially, subcooled water is flowing into a fuel assembly with subcooled water exiting the fuel assembly several degrees hotter than when it entered. No boiling is occurring in the fuel assembly. Assume that fuel assembly thermal power and water flow rate remain the same.

System pressure is decreased, causing some of the water in contact with the fuel rods to boil during transit through the fuel assembly, but the water exiting the fuel assembly remains subcooled. Compared to the initial conditions, the average fuel temperature in the fuel assembly will be _____; and the temperature of the water exiting the fuel assembly will be _____.

A. higher; the same

B. higher; higher

C. lower; the same

D. lower; higher

ANSWER: D.

TOPIC: 293008
KNOWLEDGE: K1.06 [2.5/2.6]
QID: B387

Which one of the following conditions must occur to sustain natural convection in a fluid system?

A. Subcooling of the fluid

B. A phase change in the fluid

C. An enthalpy change in the fluid

D. Radiative heat transfer to the fluid

ANSWER: C.

TOPIC: 293008
KNOWLEDGE: K1.06 [2.5/2.6]
QID: B2386 (P1989)

Which one of the following conditions must occur to sustain natural convection in a fluid system?

A. Subcooling of the fluid.

B. A phase change in the fluid.

C. A density change in the fluid.

D. Radiative heat transfer to the fluid.

ANSWER: C.

TOPIC: 293008
KNOWLEDGE: K1.07 [2.8/3.0]
QID: B388 (P387)

What type of boiling is described as follows?

The bulk temperature of the liquid is below saturation, but the temperature of the heat transfer surface is above saturation. Vapor bubbles form at the heat transfer surface, but condense in the bulk liquid so that no net generation of vapor is obtained.

A. Bulk boiling

B. Subcooled nucleate boiling

C. Transition boiling

D. Partial film boiling

ANSWER: B.

TOPIC: 293008
KNOWLEDGE: K1.07 [2.8/3.0]
QID: B887

Refer to the drawing of a pool-boiling curve (see figure below).

In which region of the curve is nucleate boiling the primary mode of heat transfer?

A. Region I

B. Region II

C. Region III

D. Region IV

ANSWER: B.

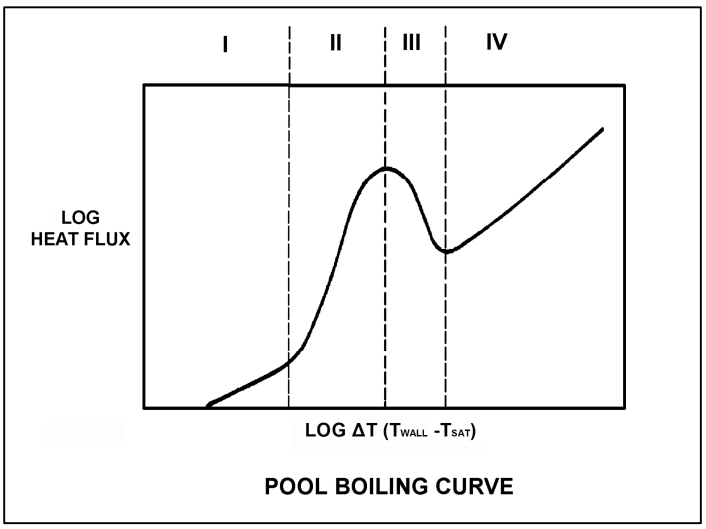

TOPIC: 293008
KNOWLEDGE: K1.07 [2.8/3.0]
QID: B1087 (P1686)

Which one of the following is a characteristic of subcooled nucleate boiling but not saturated nucleate boiling?

A. $T_{Cladding}$ equals T_{Sat}

B. $T_{Cladding}$ is greater than T_{Sat}

C. $T_{Bulk\ Coolant}$ equals T_{Sat}

D. $T_{Bulk\ Coolant}$ is less than T_{Sat}

ANSWER: D.

TOPIC: 293008
KNOWLEDGE: K1.07 [2.8/3.0]
QID: B1287 (P2687)

Which one of the following modes of heat transfer is characterized by steam bubbles moving away from a heated surface and collapsing in the bulk fluid?

A. Bulk boiling

B. Subcooled nucleate boiling

C. Saturated nucleate boiling

D. Saturated natural convection

ANSWER: B.

TOPIC: 293008
KNOWLEDGE: K1.07 [2.8/3.0]
QID: B1786 (P1888)

Which one of the following is a characteristic of saturated nucleate boiling but not subcooled nucleate boiling?

A. $T_{Cladding}$ equals T_{Sat}

B. $T_{Cladding}$ is greater than T_{Sat}

C. $T_{Bulk\ Coolant}$ equals T_{Sat}

D. $T_{Bulk\ Coolant}$ is less than T_{Sat}

ANSWER: C.

TOPIC: 293008
KNOWLEDGE: K1.07 [2.8/3.0]
QID: B1986 (P1186)

Refer to the drawing of a pool boiling curve (see figure below). In which region of the curve does the most efficient form of heat transfer occur?

A. Region I

B. Region II

C. Region III

D. Region IV

ANSWER: B.

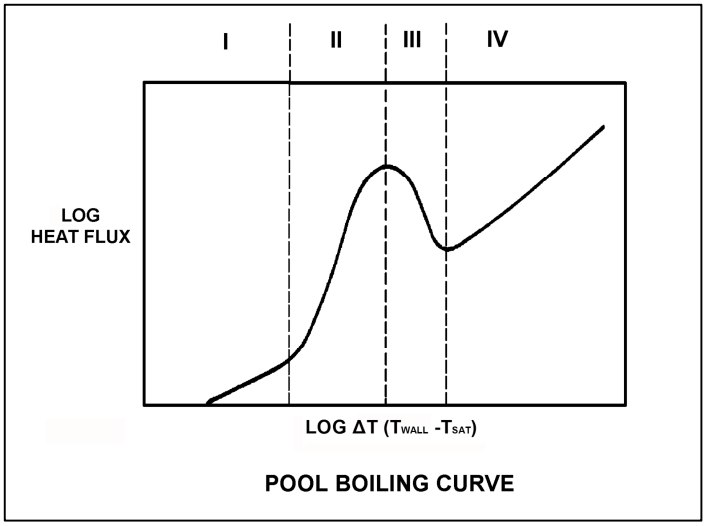

TOPIC: 293008
KNOWLEDGE: K1.07 [2.8/3.0]
QID: B2088 (P1286)

Refer to the drawing of a pool boiling curve (see figure below).

Which region of the curve contains the operating point at which the hottest locations of a reactor normally operate to transfer heat from the fuel cladding to the coolant at 100 percent power?

A. Region I

B. Region II

C. Region III

D. Region IV

ANSWER: B.

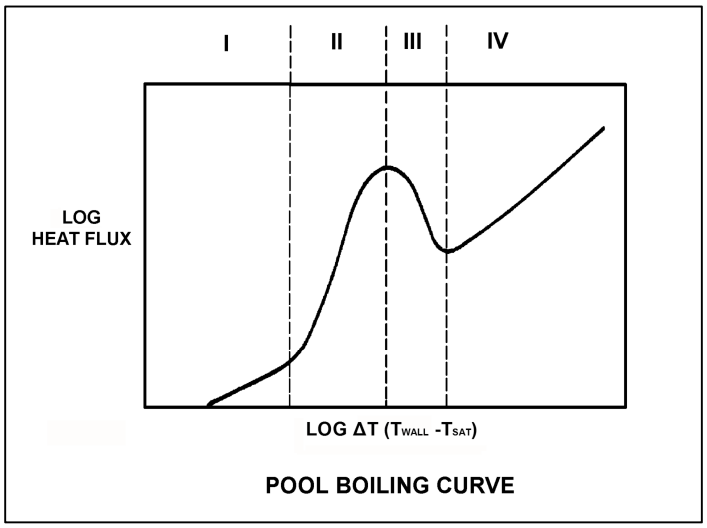

TOPIC: 293008
KNOWLEDGE: K1.07 [2.8/3.0]
QID: B3685 (P3686)

A nuclear power plant is currently shut down after several months of operation at 100 percent power. The shutdown cooling system is in operation, maintaining an average reactor coolant temperature of 280°F. A pressure control malfunction causes reactor coolant pressure to slowly and continuously decrease from 100 psia while reactor coolant temperature remains constant.

Which one of the following describes the location where nucleate boiling will first occur?

A. At a scratch on the surface of a fuel rod near the top of a fuel assembly.

B. At a scratch on the surface of a fuel rod near the bottom of a fuel assembly.

C. In the bulk fluid of a coolant channel near the top of a fuel assembly.

D. In the bulk fluid of a coolant channel near the bottom of a fuel assembly.

ANSWER: A.

TOPIC: 293008
KNOWLEDGE: K1.08 [2.9/3.1]
QID: B142

Which one of the following describes the onset of transition boiling?

A. Steam bubbles begin to blanket the fuel rod causing a rapid increase in the ΔT between the fuel rod and the coolant.

B. Steam bubbles completely blanket the fuel rod causing an increase in the heat flux from the fuel rod.

C. Steam bubbles begin to blanket the fuel rod causing a rapid decrease in ΔT between the fuel rod and the coolant.

D. Steam bubbles break up the laminar layer of coolant on the surface of the fuel rod causing an increase in the heat flux from the fuel rod.

ANSWER: A.

TOPIC: 293008
KNOWLEDGE: K1.08 [2.9/3.1]
QID: B287

Departure from nucleate boiling (DNB) occurs when steam bubbles begin to blanket the fuel rod, resulting in a rapid _____ in heat transfer rate and a rapid _____ in ΔT (fuel cladding minus coolant temperature).

A. decrease; increase

B. decrease; decrease

C. increase; increase

D. increase; decrease

ANSWER: A.

TOPIC: 293008
KNOWLEDGE: K1.08 [2.9/3.1]
QID: B1288 (P3388)

Which one of the following is indicated by a rapid increase in the temperature difference between the fuel cladding and the bulk coolant?

A. Bulk boiling is occurring.

B. Nucleate boiling is occurring.

C. Critical heat flux is increasing.

D. Departure from nucleate boiling is occurring.

ANSWER: D.

TOPIC: 293008
KNOWLEDGE: K1.08 [2.9/3.1]
QID: B1985 (P1288)

Departure from nucleate boiling should not be allowed to occur in the core because...

A. as steam bubbles begin to blanket the fuel rod, the radiative heat transfer decreases.

B. as steam bubbles in the coolant form and then collapse, water hammer occurs.

C. as steam bubbles begin to blanket the fuel rod, its temperature rises sharply.

D. as steam bubbles form in the coolant, voids-induced reactivity changes cause undesirable power changes.

ANSWER: C.

TOPIC: 293008
KNOWLEDGE: K1.08 [2.9/3.1]
QID: B2987 (P287)

Which one of the following describes the heat transfer from a fuel rod experiencing departure from nucleate boiling? (ΔT refers to the difference between the fuel rod surface temperature and the coolant saturation temperature.)

A. Steam bubbles begin to blanket the fuel rod surface, causing a rapid increase in the ΔT for a given heat flux.

B. Steam bubbles completely blanket the fuel rod surface, causing a rapid decrease in the ΔT for a given heat flux.

C. Steam bubbles begin to form on the fuel rod surface, causing a rapid increase in the heat flux from the fuel rod for a given ΔT.

D. Steam bubbles completely blanket the fuel rod surface, causing a rapid increase in the heat flux from the fuel rod for a given ΔT.

ANSWER: A.

TOPIC: 293008
KNOWLEDGE: K1.09 [3.0/3.2]
QID: B288

Refer to the drawing of a hypothetical fuel bundle coolant channel (see figure below).

For the hypothetical fuel bundle coolant channel shown below, at what point along its length does transition boiling begin?

A. 1

B. 2

C. 3

D. 4

ANSWER: C.

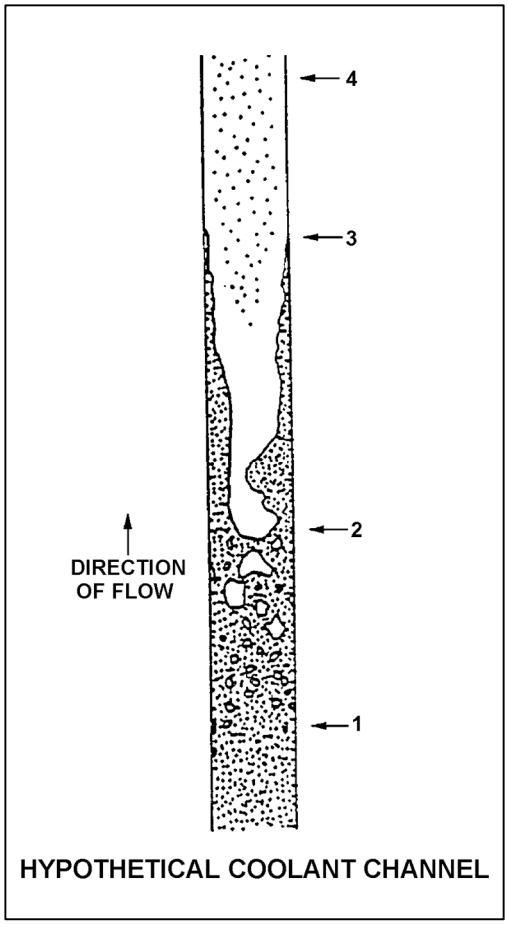

TOPIC: 293008
KNOWLEDGE: K1.09 [3.0/3.2]
QID: B987 (P1891)

Which one of the following describes the heat transfer conditions in a fuel assembly that is experiencing transition boiling?

A. Complete steam blanketing of the fuel rod surface.

B. Alternate wetting and drying of the fuel rod surface.

C. Saturated nucleate boiling.

D. Subcooled nucleate boiling.

ANSWER: B.

TOPIC: 293008
KNOWLEDGE: K1.09 [3.0/3.2]
QID: B1386 (P1689)

Refer to the drawing of a pool boiling curve (see figure below).

Which one of the points shown marks the onset of transition boiling?

A. A

B. B

C. C

D. D

ANSWER: B.

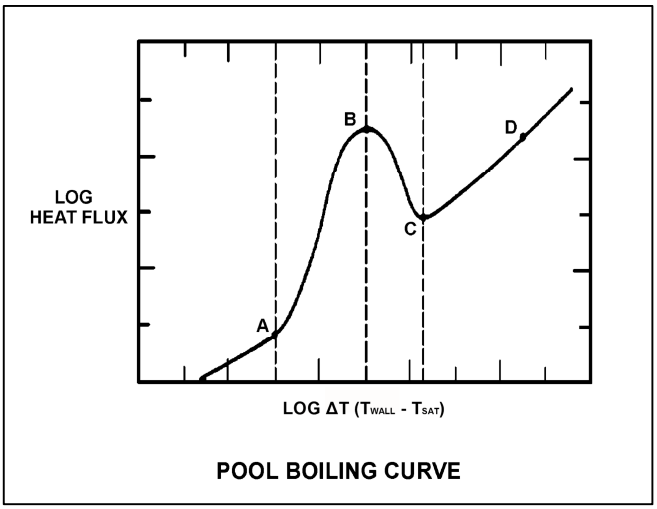

TOPIC: 293008
KNOWLEDGE: K1.09 [3.0/3.2]
QID: B1486 (P2688)

Refer to the drawing of a pool boiling curve (see figure below).

Which one of the following regions represents the most unstable mode of heat transfer?

A. Region I

B. Region II

C. Region III

D. Region IV

ANSWER: C.

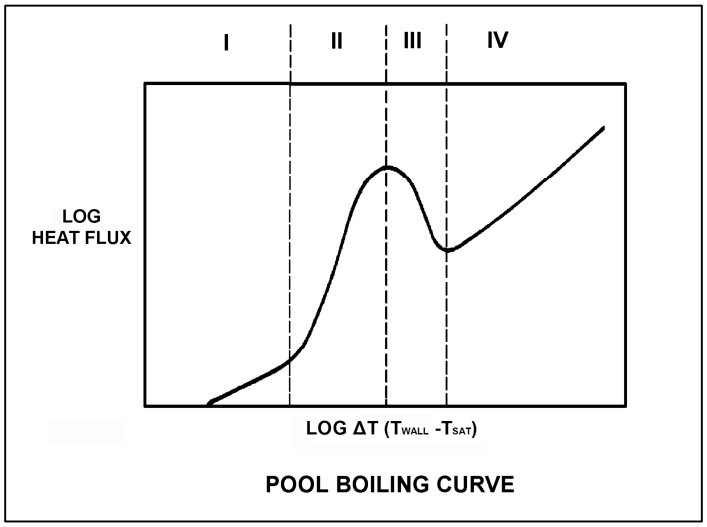

TOPIC: 293008
KNOWLEDGE: K1.09 [3.0/3.2]
QID: B1587 (P1587)

Refer to the drawing of a pool boiling curve (see figure below).

Which one of the points shown marks the smallest ΔT at which stable film boiling can exist?

A. A

B. B

C. C

D. D

ANSWER: C.

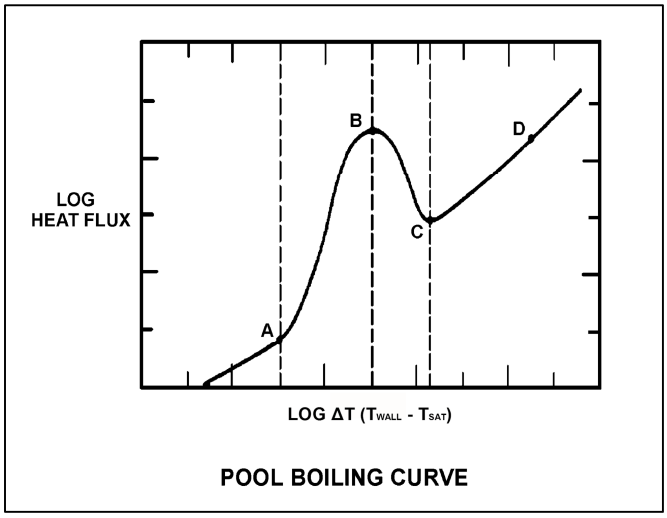

TOPIC: 293008
KNOWLEDGE: K1.09 [3.0/3.2]
QID: B2288 (P1987)

Which one of the following describes the conditions in a fuel assembly that is experiencing transition boiling?

A. Complete steam blanketing of the fuel rod surface.

B. Alternate wetting and drying of the fuel rod surface.

C. Steam bubbles form and collapse on the fuel rod surface.

D. Steam bubbles form on the fuel rod surface and are swept away by subcooled bulk coolant.

ANSWER: B.

TOPIC: 293008
KNOWLEDGE: K1.10 [2.9/3.0]
QID: B289 (P2289)

Refer to the drawing of a pool-boiling curve (see figure below).

With heat flux continuously increasing, the point at which the critical heat flux is reached (point B), marks the beginning of...

A. nucleate boiling.

B. stable film boiling.

C. partial film boiling.

D. single-phase convection.

ANSWER: C.

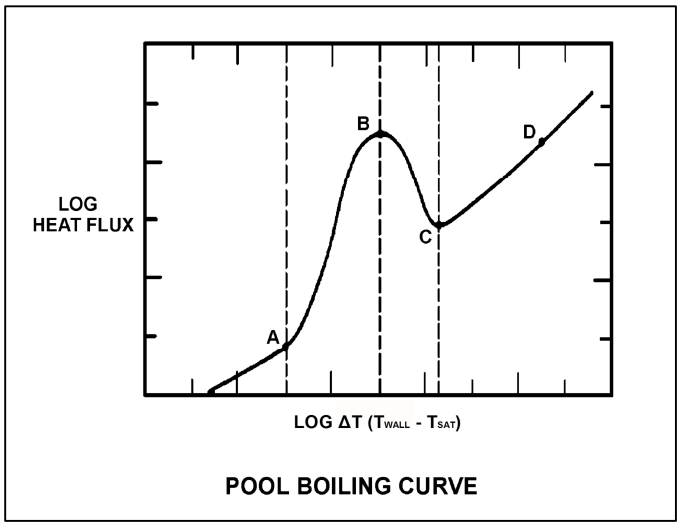

TOPIC: 293008
KNOWLEDGE: K1.10 [2.9/3.0]
QID: B390

The magnitude of the local fuel pin heat flux that is necessary to cause the onset of transition boiling is...

A. greatest at the top of the core and smallest at the bottom of the core.

B. greatest at the bottom of the core and smallest at the top of the core.

C. greatest at the core midplane and smallest at the top and bottom of the core.

D. greatest at the top and bottom of the core and smallest at the core midplane.

ANSWER: B.

TOPIC: 293008
KNOWLEDGE: K1.10 [2.9/3.0]
QID: B1687

A reactor is operating at 100 percent power. Which one of the following will be the initial type of fuel damage experienced if a fuel rod exceeds the critical heat flux?

A. Loss of cladding integrity

B. Loss of pellet integrity

C. Pellet-cladding interaction

D. Cladding creep

ANSWER: A.

TOPIC: 293008
KNOWLEDGE: K1.10 [2.9/3.0]
QID: B1888

How does critical heat flux vary from the bottom to the top of a typical fuel bundle while operating at 100 percent power?

A. Decreases continuously.

B. Decreases, then increases.

C. Increases continuously.

D. Increases, then decreases.

ANSWER: A.

TOPIC: 293008
KNOWLEDGE: K1.10 [2.9/3.0]
QID: B2487

A reactor is shutdown at normal operating temperature and pressure. Which one of the following will decrease the critical heat flux for the reactor fuel? (Assume the reactor remains shutdown.)

A. Fully withdrawing one control rod.

B. Increasing reactor vessel water level by 12 inches.

C. Increasing reactor recirculation flow rate by 100 gpm.

D. Increasing reactor pressure by 10 psig.

ANSWER: D.

TOPIC: 293008
KNOWLEDGE: K1.11 [2.7/2.8]
QID: B91

Which one of the following describes transition (partial film) boiling? (ΔT refers to the difference between the fuel rod surface temperature and the coolant saturation temperature.)

A. A small increase in ΔT causes increased steam blanketing and a reduction in heat flux.

B. The temperature of the heat transfer surface is so high that thermal radiative heat transfer becomes significant and heat flux increases.

C. As the ΔT increases, the increasing number of steam bubbles causes increased agitation and turbulence of the boundary layer, allowing increased heat flux.

D. As the ΔT increases, a few vapor bubbles are formed that may collapse when they enter into the bulk of the fluid.

ANSWER: A.

TOPIC: 293008
KNOWLEDGE: K1.11 [2.7/2.8]
QID: B1289

A reactor is operating at full power with a fuel bundle that is experiencing each of the following modes of heat transfer somewhere along its length.

Which one of the following causes the first reduction in the local fuel cladding heat transfer rate as the coolant flows upward through the fuel bundle?

A. Nucleate boiling

B. Stable film boiling

C. Partial film boiling

D. Single-phase convection

ANSWER: C.

TOPIC: 293008
KNOWLEDGE: K1.11 [2.7/2.8]
QID: B1987 (P889)

If the fission rate in a reactor core steadily increases, the mode of heat transfer that occurs immediately after the critical heat flux is reached is called...

A. transition boiling.

B. subcooled nucleate boiling.

C. saturated nucleate boiling.

D. stable film boiling.

ANSWER: A.

TOPIC: 293008
KNOWLEDGE: K1.11 [2.7/2.8]
QID: B2185 (P2188)

Refer to the drawing of a pool boiling curve (see figure below).

Which one of the following describes the heat transfer conditions in a fuel assembly that is experiencing region III heat transfer?

A. Complete steam blanketing of the fuel rod surface.

B. Alternate wetting and drying of the fuel rod surface.

C. Saturated nucleate boiling.

D. Subcooled nucleate boiling.

ANSWER: B.

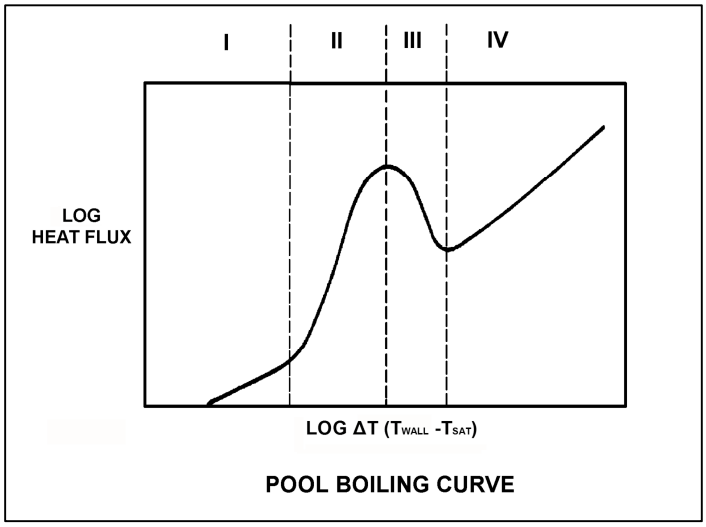

TOPIC: 293008
KNOWLEDGE: K1.12 [2.7/2.8]
QID: B2588 (P2588)

Refer to the drawing of a pool boiling curve (see figure below).

Which one of the following describes the conditions in a fuel assembly that is experiencing region IV heat transfer?

A. Complete steam blanketing of the fuel rod surface.

B. Alternate wetting and drying of the fuel rod surface.

C. Saturated nucleate boiling.

D. Subcooled nucleate boiling.

ANSWER: A.

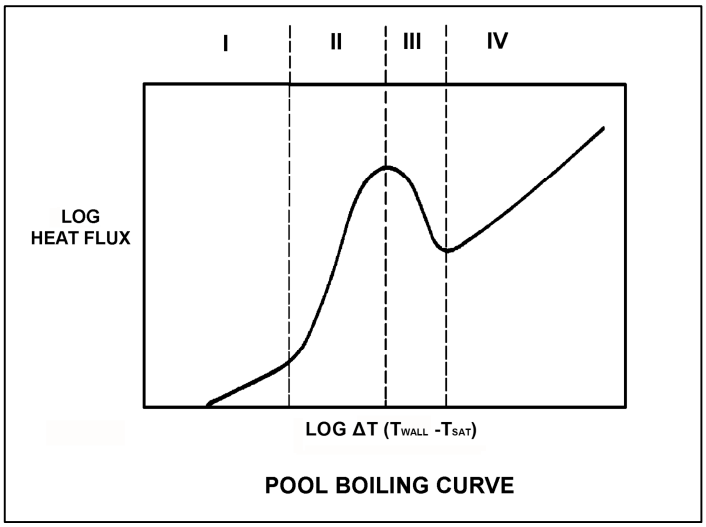

TOPIC: 293008
KNOWLEDGE: K1.12 [2.7/2.8]
QID: B3485 (P3488)

During a loss of coolant accident, some fuel rods may experience stable film boiling. Which one of the following types of heat transfer from the fuel cladding will increase significantly when stable film boiling begins?

A. Forced convection

B. Natural convection

C. Conduction

D. Radiation

ANSWER: D.

TOPIC: 293008
KNOWLEDGE: K1.17 [2.5/2.8]
QID: B1588

A reactor is operating at steady-state 90 percent power. Which one of the following will cause the two-phase coolant flowing upward in a fuel bundle to approach the onset of transition boiling? (Assume reactor power does <u>not</u> change unless stated.)

A. Reactor pressure increases.

B. Recirculation flow rate increases.

C. Feedwater temperature decreases.

D. Fuel bundle power decreases.

ANSWER: A.

TOPIC: 293008
KNOWLEDGE: K1.17 [2.5/2.8]
QID: B1891

A reactor is operating at steady-state 90 percent power. Which one of the following will cause the two-phase coolant flowing upward in a fuel bundle to approach the onset of transition boiling? (Assume reactor power does not change unless stated.)

A. Recirculation flow rate decreases.

B. Reactor pressure decreases.

C. Feedwater temperature decreases.

D. Fuel bundle power decreases.

ANSWER: A.

TOPIC: 293008
KNOWLEDGE: K1.17 [2.5/2.8]
QID: B2089

A reactor is operating at steady-state 70 percent power. Which one of the following will cause the two-phase coolant flowing upward in a fuel bundle to move away from the onset of transition boiling? (Assume reactor power does not change unless stated.)

A. Recirculation flow rate increases.

B. Reactor pressure increases.

C. Feedwater temperature increases.

D. Fuel bundle power increases.

ANSWER: A.

TOPIC: 293008
KNOWLEDGE: K1.17 [2.5/2.8]
QID: B2589

A reactor is operating at steady-state 90 percent power. Which one of the following will cause the two-phase coolant flowing upward in a fuel bundle to move away from the onset of transition boiling? (Assume reactor power does not change unless stated.)

A. Recirculation flow rate decreases.

B. Reactor pressure increases.

C. Feedwater temperature decreases.

D. Fuel bundle power increases.

ANSWER: C.

TOPIC: 293008
KNOWLEDGE: K1.17 [2.5/2.8]
QID: B2789

A reactor is operating at steady-state 90 percent power. Which one of the following will cause the two-phase coolant flowing upward in a fuel bundle to approach the onset of transition boiling? (Assume reactor power does not change unless stated.)

A. Recirculation flow rate increases.

B. Reactor pressure decreases.

C. Feedwater temperature increases.

D. Fuel bundle power decreases.

ANSWER: C.

TOPIC: 293008
KNOWLEDGE: K1.19 [2.6/2.8]
QID: B789

Core inlet subcooling is defined as the difference between the saturation temperature of the fluid in the core inlet plenum and the temperature of the fluid...

A. in the core inlet plenum.

B. at the feedwater pump discharge.

C. in the downcomer area.

D. in the lower fuel channel area.

ANSWER: A.

TOPIC: 293008
KNOWLEDGE: K1.20 [2.4/2.6]
QID: B790

Carryunder is most damaging to which one of the following components?

A. Main turbine

B. Moisture separator (turbine)

C. Recirculation pump

D. Moisture separator (reactor vessel)

ANSWER: C.

TOPIC: 293008
KNOWLEDGE: K1.20 [2.4/2.6]
QID: B989

Which one of the following actions will initially reduce core inlet subcooling?

A. Isolate steam to one feedwater heater.

B. Increase reactor recirculation mass flow rate.

C. Decrease the mass ratio of saturated water-to-saturated steam returning to the downcomer.

D. Increase the mass ratio of saturated water-to-saturated steam returning to the downcomer.

ANSWER: C.

TOPIC: 293008
KNOWLEDGE: K1.21 [3.0/3.0]
QID: B290

Void fraction is the ratio of the _____ of steam to the _____ of steam-water mixture at a given elevation in a fuel channel.

A. volume; mass

B. mass; mass

C. volume; volume

D. mass; volume

ANSWER: C.

TOPIC: 293008
KNOWLEDGE: K1.21 [3.0/3.0]
QID: B1487

Given the following conditions for a 10 lbm steam-water mixture:

Steam quality = 20 percent
Pressure = 1,000 psia

Which one of the following is the approximate void fraction?

A. 42 percent

B. 48 percent

C. 84 percent

D. 96 percent

ANSWER: C.

TOPIC: 293008
KNOWLEDGE: K1.21 [3.0/3.0]
QID: B1689

Given the following conditions for a 10 lbm steam-water mixture:

Steam quality = 30 percent
Pressure = 1,000 psia

Which one of the following is the void fraction?

A. 10.1 percent

B. 11.3 percent

C. 88.7 percent

D. 89.9 percent

ANSWER: D.

TOPIC: 293008
KNOWLEDGE: K1.21 [3.0/3.0]
QID: B2389

Given the following conditions for a 10 lbm steam-water mixture:

Steam quality = 40 percent
Pressure = 1,000 psia

Which one of the following is the void fraction?

A. 93.2 percent

B. 89.9 percent

C. 10.1 percent

D. 6.8 percent

ANSWER: A.

TOPIC: 293008
KNOWLEDGE: K1.21 [3.0/3.0]
QID: B2690

Which one of the following ratios can be used to calculate the core void fraction?

A. $\frac{\text{Steam Volume}}{\text{Water Volume}}$

B. $\frac{\text{Steam Volume}}{\text{Steam Volume + Water Volume}}$

C. $\frac{\text{Steam Volume + Water Volume}}{\text{Steam Volume - Water Volume}}$

D. $\frac{\text{Steam Volume + Water Volume}}{\text{Steam Volume x Water Volume}}$

ANSWER: B.

TOPIC: 293008
KNOWLEDGE: K1.22 [2.9/3.0]
QID: B587

A nuclear power plant is operating at steady-state 80 percent power. If reactor recirculation flow rate is decreased from 100 percent to 80 percent, the boiling boundary will initially move _____ the fuel rod because each unit quantity of water is receiving _____ heat from the fuel.

A. up; more

B. up; fewer

C. down; more

D. down; fewer

ANSWER: C.

TOPIC: 293008
KNOWLEDGE: K1.22 [2.9/3.0]
QID: B2091

A reactor is operating at steady-state 70 percent power when recirculation flow rate is increased by 5 percent.

Which one of the following statements describes the initial response of the boiling boundary in the core?

A. It physically moves upward, because each unit quantity of coolant must travel farther through a fuel bundle before vaporizing.

B. It physically moves upward, because each unit quantity of coolant enters the core with a larger subcooled margin.

C. It physically moves downward, because each unit quantity of coolant will vaporize sooner as it travels through a fuel bundle.

D. It physically moves downward, because each unit quantity of coolant enters the core with a smaller subcooled margin.

ANSWER: A.

TOPIC: 293008
KNOWLEDGE: K1.23 [2.5/2.7]
QID: B688

Which one of the following is the appropriate quality of a saturated steam-water mixture leaving a cyclone separator at 985 psig and 1174 Btu/lbm?

A. 95 percent

B. 96 percent

C. 97 percent

D. 98 percent

ANSWER: C.

TOPIC: 293008
KNOWLEDGE: K1.23 [2.5/2.7]
QID: B1387

Which one of the following is the appropriate quality of a saturated steam-water mixture leaving a cyclone separator at 985 psig and 1180 Btu/lbm?

A. 96 percent

B. 97 percent

C. 98 percent

D. 99 percent

ANSWER: C.

TOPIC: 293008
KNOWLEDGE: K1.23 [2.5/2.7]
QID: B1788

Which one of the following is the approximate quality of a saturated steam-water mixture leaving a fuel bundle at 948 psig and 905 Btu/lbm?

A. 27 percent

B. 44 percent

C. 56 percent

D. 73 percent

ANSWER: C.

TOPIC: 293008
KNOWLEDGE: K1.24 [2.4/2.5]
QID: B391

Refer to the drawing of a fuel rod and adjacent coolant flow channel (see figure below).

With a power plant operating at steady-state 100 percent reactor power at the beginning of a fuel cycle, which one of the following has the greater temperature difference?

A. Coolant laminar layer

B. Cladding corrosion film

C. Zircaloy cladding

D. Pellet-to-cladding gap

ANSWER: D.

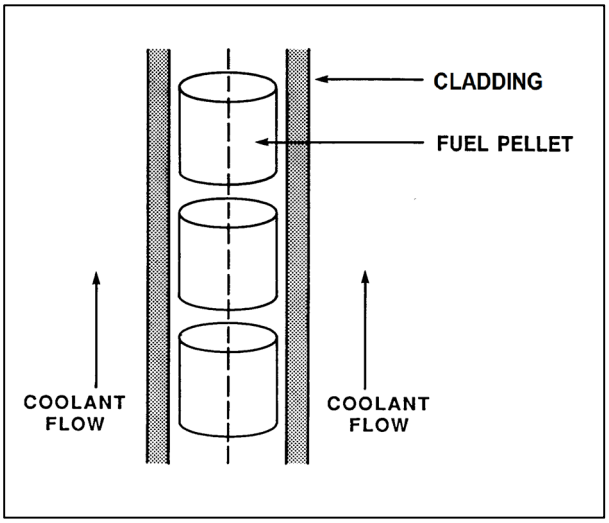

TOPIC: 293008
KNOWLEDGE: K1.24 [2.4/2.5]
QID: B1989 (P391)

Refer to the drawing of a fuel rod and adjacent coolant flow channel (see figure below).

With a nuclear power plant operating at steady-state 100 percent reactor power at the beginning of a fuel cycle, which one of the following has the greater temperature difference?

A. Fuel pellet centerline-to-pellet surface

B. Fuel pellet surface-to-cladding gap

C. Zircaloy cladding

D. Coolant laminar layer

ANSWER: A.

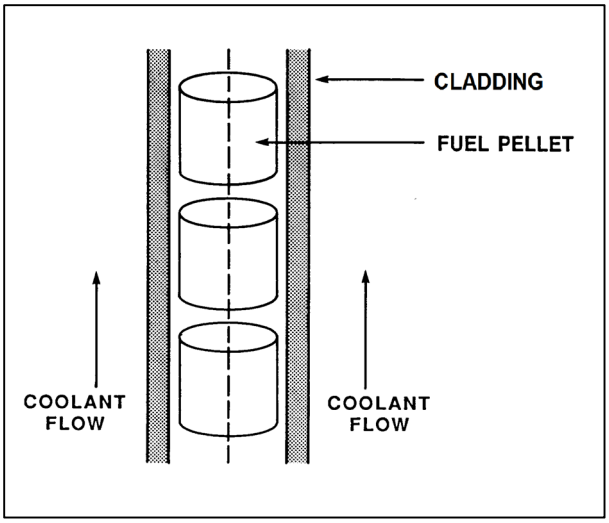

TOPIC: 293008
KNOWLEDGE: K1.25 [3.2/3.2]
QID: B1189

Forced circulation through a reactor core is required at all times during power operation to prevent...

A. the core from becoming prompt critical due to high fuel and coolant temperatures.

B. exceeding reactor vessel and core design steaming rates.

C. high fuel cladding surface temperatures, which could result in a crack or leak in the cladding.

D. jet pump cavitation, which could reduce the power generated by the core.

ANSWER: C.

TOPIC: 293008
KNOWLEDGE: K1.25 [3.2/3.2]
QID: B3789

Which one of the following describes the relationship between the feedwater mass flow rate entering the reactor vessel and the core mass flow rate at steady-state 100 percent reactor power?

A. The mass flow rates are about the same as long as the reactor vessel downcomer level is constant.

B. The mass flow rates are about the same as long as the reactor recirculation mass flow rate is constant.

C. The feedwater mass flow rate is much smaller than the core mass flow rate because most of the core mass flow is returned to the reactor vessel downcomer by the steam separators.

D. The feedwater mass flow rate is much larger than the core mass flow rate because the feedwater pump differential pressure is much larger than the core differential pressure.

ANSWER: C.

TOPIC: 293008
KNOWLEDGE: K1.26 [2.9/3.1]
QID: B1389

Refer to the drawing of a core recirculation jet pump (see figure below).

The highest pressure will exist at point _____; and the highest velocity will occur at point _____.

A. 1; 4

B. 2; 4

C. 1; 3

D. 2; 3

ANSWER: C.

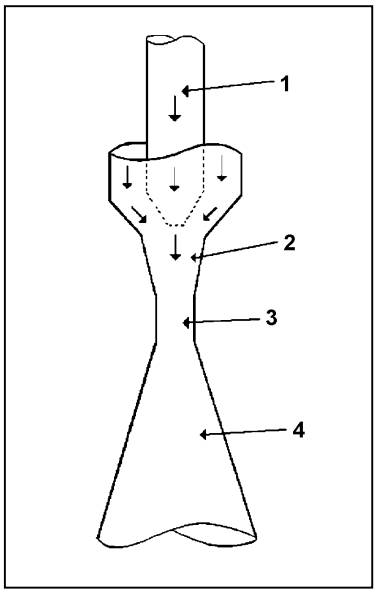

TOPIC: 293008
KNOWLEDGE: K1.26 [2.9/3.1]
QID: B2791

Refer to the drawing of a core recirculation jet pump (see figure below).

During normal operation, the lowest pressure will exist at point _____; and the highest velocity will occur at point _____.

A. 3; 3

B. 3; 4

C. 4; 3

D. 4; 4

ANSWER: A.

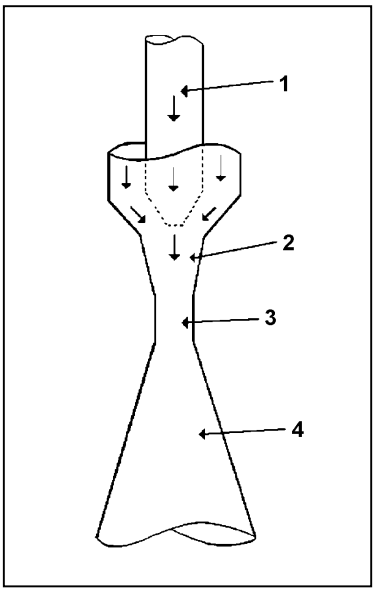

TOPIC: 293008
KNOWLEDGE: K1.28 [2.3/2.5]
QID: B490

A reactor is operating at steady-state 100 percent power when recirculation flow is decreased from 100 percent to 80 percent. During the flow reduction, the boiling boundary will move _____ in the core because each pound-mass of water flowing through the core is required to remove _____ heat from the fuel rods.

A. upward; less

B. upward; more

C. downward; less

D. downward; more

ANSWER: D.

TOPIC: 293008
KNOWLEDGE: K1.28 [2.3/2.5]
QID: B1789 (P1790)

Single-phase coolant flow resistance in a reactor core is directly proportional to the square of coolant _____; and inversely proportional to _____.

A. velocity; fuel assembly length

B. temperature; fuel assembly length

C. velocity; coolant channel cross-sectional area

D. temperature; coolant channel cross-sectional area

ANSWER: C.

TOPIC: 293008
KNOWLEDGE: K1.28 [2.3/2.5]
QID: B5445 (P5446)

Refer to the drawing of a section of pipe that contains flowing subcooled water (see figure below).

Given:

- Pressure at P_1 is 24 psig.
- Pressure at P_2 is 16 psig.
- Pressure change due to change in velocity is 2 psig.
- Pressure change due to change in elevation is 10 psig.

The pressure decrease due to friction head loss between P_1 and P_2 is _____; and the direction of flow is from _____.

A. 2 psig; left to right

B. 2 psig; right to left

C. 4 psig; left to right

D. 4 psig; right to left

ANSWER: D.

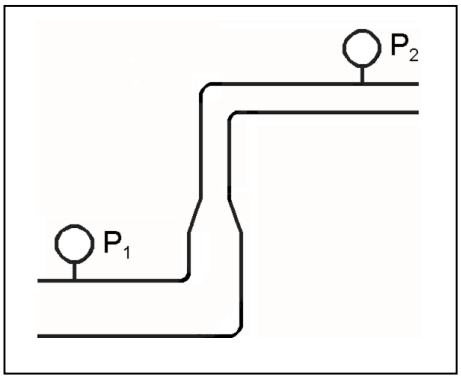

TOPIC: 293008
KNOWLEDGE: K1.28 [2.3/2.5]
QID: B5845 (P5847)

Refer to the drawing of a section of pipe that contains flowing subcooled water (see figure below).

Given:

- Pressure at P_1 is 26 psig.
- Pressure at P_2 is 34 psig.
- Pressure change due to change in velocity is 2 psig.
- Pressure change due to change in elevation is 8 psig.

The pressure decrease due to friction head loss between P_1 and P_2 is _____; and the direction of flow is from _____.

A. 2 psig; left to right

B. 2 psig; right to left

C. 4 psig; left to right

D. 4 psig; right to left

ANSWER: A.

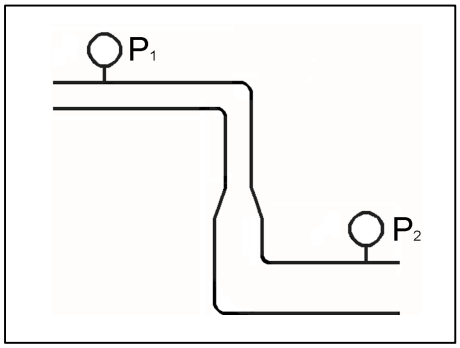

TOPIC: 293008
KNOWLEDGE: K1.28 [2.3/2.5]
QID: B6646 (P6648)

Refer to the drawing of a section of pipe that contains flowing subcooled water. (See figure below).

Given:

- Pressure at P_1 is 30 psig.
- Pressure at P_2 is 32 psig.
- Pressure change due to change in velocity is 2 psig.
- Pressure change due to change in elevation is 2 psig.

The pressure decrease due to friction head loss between P_1 and P_2 is _____; and the direction of flow is from _____.

A. 2 psig; left to right

B. 2 psig; right to left

C. 6 psig; left to right

D. 6 psig; right to left

ANSWER: B.

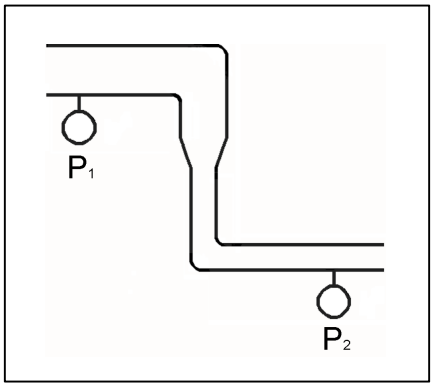

TOPIC: 293008
KNOWLEDGE: K1.28 [2.3/2.5]
QID: B7046 (P7048)

Refer to the drawing of a section of pipe that contains flowing subcooled water (see figure below).

Given:

- Pressure at P_1 is 34 psig.
- Pressure at P_2 is 20 psig.
- Pressure change due to change in velocity is 2 psig.
- Pressure change due to change in elevation is 8 psig.

The pressure decrease due to friction head loss between P_1 and P_2 is _____; and the direction of flow is from _____.

A. 2 psig; left to right

B. 2 psig; right to left

C. 4 psig; left to right

D. 4 psig; right to left

ANSWER: D.

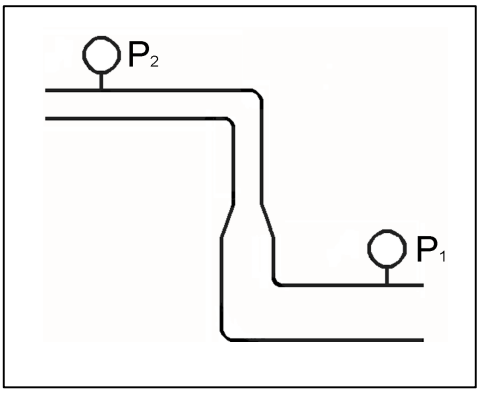

TOPIC: 293008
KNOWLEDGE: K1.28 [2.3/2.5]
QID: B7680 (P7680)

Refer to the drawing of a section of pipe that contains flowing subcooled water (see figure below).

Given:

- The pressure at P_1 is 20 psig.
- The pressure at P_2 is 20 psig.
- The pressure change caused by the change in velocity is 2 psig.
- The pressure change caused by the change in elevation is 8 psig.

The pressure decrease due to friction head loss between P_1 and P_2 is _____; and the direction of flow is from _____.

A. 6 psig; left to right

B. 6 psig; right to left

C. 10 psig; left to right

D. 10 psig; right to left

ANSWER: B.

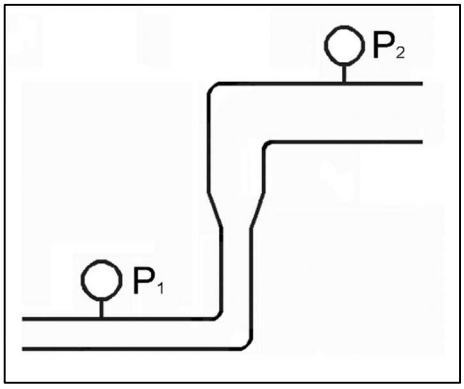

TOPIC: 293008
KNOWLEDGE: K1.29 [2.8/3.0]
QID: B93

Which one of the following statements describes the effect of an increase in bundle power on bundle flow rate in a centrally located fuel bundle? (Assume total recirculation flow remains constant.)

A. Bundle flow rate increases, because increased boiling causes the coolant density to decrease, thereby reducing flow resistance.

B. Bundle flow rate decreases, because increased boiling increases backpressure from increased reactor steam dome pressure.

C. Bundle flow rate increases, because increased boiling causes acceleration of coolant due to rapid expansion.

D. Bundle flow rate decreases, because increased boiling increases backpressure due to increased turbulence.

ANSWER: D.

TOPIC: 293008
KNOWLEDGE: K1.29 [2.8/3.0]
QID: B2090

Reactors A and B are identical. Reactor A is operating at 75 percent power and reactor B is operating at 50 percent power. Both reactors have the same power distribution and core mass flow rate.

Compared to the center fuel bundle in reactor A, the center fuel bundle in reactor B has the _____ coolant flow rate and the _____ critical power.

A. lower; lower

B. lower; higher

C. higher; lower

D. higher; higher

ANSWER: D.

TOPIC: 293008
KNOWLEDGE: K1.29 [2.8/3.0]
QID: B2390

Reactors A and B are identical. Reactor A is operating at 50 percent power and reactor B is operating at 75 percent power. Both reactors have the same power distribution and core mass flow rate.

Compared to the center fuel bundle in reactor A, the center fuel bundle in reactor B has the _____ critical power and the _____ coolant flow rate.

A. lower; lower

B. lower; higher

C. higher; lower

D. higher; higher

ANSWER: A.

TOPIC: 293008
KNOWLEDGE: K1.29 [2.8/3.0]
QID: B5646

Reactors A and B are operating at steady-state 100 percent power. The reactors are identical except that reactor A has core orifices and reactor B does <u>not</u>. Both reactors have the same power distribution and core mass flow rate.

Compared to the center fuel bundle in reactor B, the center fuel bundle in reactor A will have the _____ exit steam quality and the _____ critical power.

A. lower; lower

B. lower; higher

C. higher; lower

D. higher; higher

ANSWER: B.

TOPIC: 293008
KNOWLEDGE: K1.30 [2.7/2.7]
QID: B590

Without core orifices, the coolant flow rate through a high-power bundle will be less than the flow rate through a low-power bundle because the...

A two-phase flow-friction multiplier will be greater in the low-power bundle.

B. channel quality will be greater in the high-power bundle.

C. bypass flow will be greater in the high-power bundle.

D. thermal expansion of the fuel rods will be greater in the high-power bundle.

ANSWER: B.

TOPIC: 293008
KNOWLEDGE: K1.30 [2.7/2.7]
QID: B890

With a reactor operating at 100 percent power, if core orifices were <u>not</u> used, the highest core flow rates would exist in...

A. low-power bundles, because of decreased flow resistance.

B. low-power bundles, because of reduced control rod obstruction.

C. high-power bundles, because of decreased flow resistance.

D. high-power bundles, because of reduced control rod obstruction.

ANSWER: A.

TOPIC: 293008
KNOWLEDGE: K1.30 [2.7/2.7]
QID: B990

Reactors A and B are operating at steady-state 100 percent power. The reactors are identical except that reactor A has core orifices and reactor B does not. Both reactors have the same power distribution and core mass flow rate.

Compared to the center fuel bundle in reactor B, the center fuel bundle in reactor A will have the _____ critical power and the _____ coolant flow rate.

A. lower; lower

B. lower; higher

C. higher; lower

D. higher; higher

ANSWER: D.

TOPIC: 293008
KNOWLEDGE: K1.30 [2.7/2.7]
QID: B1190

A reactor is operating at the point of adding heat during a reactor heatup. With only single-phase flow in the reactor, core orificing causes core flow to be...

A. highest in the periphery bundles.

B. highest in the central bundles.

C. the same for all bundles.

D. unpredictable.

ANSWER: B.

TOPIC: 293008
KNOWLEDGE: K1.30 [2.7/2.7]
QID: B1590

Two reactors are operating at steady-state 50 percent power. The reactors are identical except that one reactor has core orifices and the other does not. Both reactors have the same power distribution and core mass flow rate.

The orificed core will have the _____ critical power and the _____ core differential pressure.

A. higher; higher

B. higher; lower

C. lower; higher

D. lower; lower

ANSWER: A.

TOPIC: 293008
KNOWLEDGE: K1.30 [2.7/2.7]
QID: B1691

A reactor is operating at 100 percent power at the beginning of core life. If core orifices were not used, the lowest bundle flow rate would exist in...

A. peripheral bundles that have control rods partially inserted.

B. central bundles that have control rods partially inserted.

C. peripheral bundles that have control rods completely withdrawn.

D. central bundles that have control rods completely withdrawn.

ANSWER: D.

TOPIC: 293008
KNOWLEDGE: K1.30 [2.7/2.7]
QID: B1790

Reactors A and B are operating at steady-state 100 percent power. The reactors are identical except that reactor A has core orifices and reactor B does not. Both reactors have the same power distribution and core mass flow rate.

Compared to the center fuel bundle in reactor A, the center fuel bundle in reactor B will have the _____ critical power and the _____ coolant flow rate.

A. lower; lower

B. lower; higher

C. higher; lower

D. higher; higher

ANSWER: A.

TOPIC: 293008
KNOWLEDGE: K1.30 [2.7/2.7]
QID: B2187

Reactors A and B are operating at steady-state 50 percent power. The reactors are identical except that reactor A has core orifices and reactor B does not. Both reactors have the same power distribution and core mass flow rate.

Reactor B will have the _____ critical power and the _____ core differential pressure.

A. higher; higher

B. higher; lower

C. lower; higher

D. lower; lower

ANSWER: D.

TOPIC: 293008
KNOWLEDGE: K1.30 [2.7/2.7]
QID: B2591

Reactors A and B are operating at steady-state 100 percent. The reactors are identical except that reactor A has core orifices and reactor B does not. Both reactors have the same power distribution and core mass flow rate.

Compared to the outer fuel bundles in reactor B, the outer fuel bundles in reactor A will have the _____ critical power and the _____ coolant flow rate.

A. lower; lower

B. lower; higher

C. higher; lower

D. higher; higher

ANSWER: A.

TOPIC: 293008
KNOWLEDGE: K1.30 [2.7/2.7]
QID: B2890

Reactors A and B are operating at steady-state 100 percent power. The reactors are identical except that reactor A has core orifices and reactor B does not. Both reactors have the same power distribution and core mass flow rate.

Compared to the center fuel bundle in reactor A, the center fuel bundle in reactor B will have the _____ exit steam quality and the _____ critical power.

A. lower; lower

B. lower; higher

C. higher; lower

D. higher; higher

ANSWER: C.

TOPIC: 293008
KNOWLEDGE: K1.31 [2.9/3.0]
QID: B291

Core orificing is used in the reactor core because the orifices...

A. counteract the buoyant force of the bubbles accelerating flow in the high-power bundles.

B. improve the distribution of core flow to offset the effect of increasing quality on bundle flow.

C. increase core ΔP so that minor crud buildup on fuel bundles will not adversely affect flow.

D. decrease flow during periods of natural circulation to increase the void coefficient.

ANSWER: B.

TOPIC: 293008
KNOWLEDGE: K1.31 [2.9/3.0]
QID: B1388

Which one of the following occurs as a result of reactor core orifices?

A. The core differential pressure is minimized at all power levels.

B. The total core coolant flow rate remains the same at all power levels.

C. The total core coolant flow rate is divided equally through all bundles at all power levels.

D. The highest bundle coolant flow rates exist in core interior bundles at all power levels.

ANSWER: D.

TOPIC: 293008
KNOWLEDGE: K1.31 [2.9/3.0]
QID: B3890

Given:

- Reactors A and B are identical except that reactor A has no core orifices while reactor B is equipped with orifices.
- Both reactors always operate with identical recirculation system flow rates.
- Both reactors are operating at steady-state 80 percent power.
- Both reactors have the same core power distribution.

Compared to reactor A, the critical power ratio (CPR) in the central fuel bundles of reactor B is _____; and the average power in the peripheral fuel bundles of reactor B is _____.

A. smaller; smaller

B. smaller; larger

C. larger; smaller

D. larger; larger

ANSWER: C.

TOPIC: 293008
KNOWLEDGE: K1.32 [2.5/2.6]
QID: B690

Core bypass flow is...

A. undesirable, but cannot be prevented due to machined clearances in the reactor vessel.

B. desirable, because it provides cooling for low-power areas of the core.

C. undesirable, because it makes actual core flow hard to measure.

D. desirable, because it provides cooling for incore instrumentation.

ANSWER: D.

TOPIC: 293008
KNOWLEDGE: K1.32 [2.5/2.6]
QID: B2991

Which one of the following is the approximate percentage of total core flow that bypasses the fuel coolant channels in a reactor operating at 100 percent power with 100 percent recirculation flow?

A. 0.01 percent

B. 0.1 percent

C. 1 percent

D. 10 percent

ANSWER: D.

TOPIC: 293008
KNOWLEDGE: K1.32 [2.5/2.6]
QID: B3191

A reactor was initially operating at steady-state 100 percent power with 100 percent core flow rate. Reactor power was then decreased and stabilized at 75 percent using only control rods for reactivity control, while core flow rate was maintained at 100 percent.

During the power decrease, core bypass flow rate _____ because core pressure drop _____.

A. decreased; increased

B. decreased; decreased

C. increased; increased

D. increased; decreased

ANSWER: B.

TOPIC: 293008
KNOWLEDGE: K1.32 [2.5/2.6]
QID: B3290

A reactor is initially operating at steady-state 100 percent power. Reactor power is decreased to 80 percent while maintaining the total flow rate through the core region unchanged. During the power decrease, the core bypass flow rate will…

A. increase, because two-phase flow resistance in the core is greater at 80 percent power.

B. decrease, because two-phase flow resistance in the core is smaller at 80 percent power.

C. remain the same, because core bypass flow rate is dependent only on reactor core flow rate.

D. remain the same, because core bypass flow rate is unaffected by changes in reactor power.

ANSWER: B.

TOPIC: 293008
KNOWLEDGE: K1.33 [2.4/2.6]
QID: B384

What is the purpose of the coolant flow that bypasses the fuel bundles to enter the core interstitial regions?

A. Removes the heat generated in the control rods and local power range monitors.

B. Equalizes core differential pressure between the inlet and outlet plenums.

C. Offsets the decrease in heat removal from the fuel bundles as two-phase flow resistance increases.

D. Lubricates the interfacing surfaces of control rods and fuel channels to reduce sliding friction and wear.

ANSWER: A.

TOPIC: 293008
KNOWLEDGE: K1.33 [2.4/2.6]
QID: B1390

Reactor coolant flow that bypasses the core is necessary to...

A. provide a source of water to the incore thermocouples to ensure they measure a representative coolant temperature.

B. act as a neutron reflector to minimize fast neutron leakage.

C. ensure that recirculation pump flow rate is adequate to prevent pump overheating.

D. provide cooling to prevent excessive boiling in the bypass region.

ANSWER: D.

TOPIC: 293008
KNOWLEDGE: K1.34 [2.9/3.1]
QID: B192

Which one of the following statements describes natural circulation in the reactor vessel after a loss of offsite power?

A. Coolant density in the downcomer and a reduction of density in the core region support the cycle.

B. Two-phase flow in the separators allows steam to be removed and water to return to the downcomer region.

C. Relief and safety valves provide a heat sink for decay heat; in spite of leakage, control rod drive flow is adequate to maintain inventory.

D. Density of the coolant in the core region increases, allowing coolant in the downcomer to enter the core.

ANSWER: A.

TOPIC: 293008
KNOWLEDGE: K1.34 [2.9/3.1]
QID: B691

Which one of the following statements describes natural circulation in a shutdown reactor? (Assume no isolation condenser exists.)

A. The moisture separators return the liquid portion of the coolant mixture exiting the core to the downcomer where it cools and increases in density.

B. The jet pump diffusers establish a thermal driving head by increasing the velocity of the coolant as it flows downward through the diffuser.

C. Coolant flows from the downcomer into a reactor recirculation loop and is returned to the core.

D. Emergency coolant injection establishes a thermal driving head by providing cold coolant to the downcomer.

ANSWER: A.

TOPIC: 293008
KNOWLEDGE: K1.35 [3.1/3.3]
QID: B293

A reactor is shut down with all reactor recirculating pumps stopped. Which one of the following explains why it is important to monitor reactor vessel skin temperatures?

A. Significant differential temperature between the top and bottom reactor vessel heads will result in excessive thermal stresses in the reactor vessel wall.

B. Significant differential temperature between the upper and lower elevation reactor vessel skin indicates that thermal stratification is occurring.

C. These temperatures provide a backup indication of reactor water level because the skin temperatures detected above vessel water level will be lower than those below vessel water level.

D. These temperatures provide the best indication of the accuracy of the shutdown reactor water level instruments due to the temperature variance from instrument calibration conditions.

ANSWER: B.

TOPIC: 293008
KNOWLEDGE: K1.35 [3.1/3.3]
QID: B3490

Given:

- A nuclear power plant was shut down one week ago from long-term operation at 100 percent power.
- All reactor recirculation pumps are off.
- All reactor head vents are open.
- A shutdown core cooling system is currently in use, maintaining reactor coolant temperature stable at 170°F.

Reactor coolant temperature is monitored by a detector at the inlet to the in-service shutdown core cooling heat exchanger.

The flow rate from the shutdown core cooling system to the core is inadvertently throttled, resulting in thermal stratification of the reactor coolant in the core. Which one of the following combinations will occur if this thermal stratification is permitted to exist for 24 hours?

A. Water in the core will begin to boil, and the in-service shutdown cooling pump will cavitate.

B. The in-service shutdown cooling pump will cavitate, and the jet pumps will cavitate.

C. The jet pumps will cavitate, and reactor coolant temperature will indicate lower than actual core water temperature.

D. Reactor coolant temperature will indicate lower than actual core water temperature, and water in the core will begin to boil.

ANSWER: D.

TOPIC: 293008
KNOWLEDGE: K1.36 [3.1/3.3]
QID: B1491

A reactor is operating at 100 percent power when a loss of offsite power results in a reactor scram and a loss of forced core coolant flow. Several minutes later, the occurrence of natural circulation flow will be indicated by differential _____ across the core plate and coolant flow through the _____ pumps.

A. temperature; recirculation

B. temperature; jet

C. pressure; recirculation

D. pressure; jet

ANSWER: D.

TOPIC: 293008
KNOWLEDGE: K1.36 [3.1/3.3]
QID: B3891

A reactor was shut down from long-term 100 percent power operation 10 days ago. Five minutes ago, a station blackout caused a complete loss of forced coolant circulation through the core. The following conditions currently exist:

- Reactor vessel (RV) pressure indicates 0 psig.
- Main steam isolation valves are closed.
- Reactor head vents are open with no steam issuing.
- Average reactor coolant temperature is 150°F.
- Differential temperature between the upper and lower RV heads is 20°F and increasing.

Over the next hour or so, which one of the following will occur without operator action as natural circulation becomes established in the RV?

A. RV pressure will slowly increase and stabilize at about 10 psig, and the differential temperature between the upper and lower RV heads will stabilize at a value greater than 0°F.

B. RV pressure will slowly increase and stabilize at about 10 psig, and the differential temperature between the upper and lower RV heads will stabilize at 0°F.

C. RV pressure will remain near 0 psig, and the differential temperature between the upper and lower RV heads will stabilize at a value greater than 0°F.

D. RV pressure will remain near 0 psig, and the differential temperature between the upper and lower RV heads will stabilize at 0°F.

ANSWER: C.

TOPIC: 293008
KNOWLEDGE: K1.37 [3.2/3.4]
QID: B891

While a reactor is shut down, what effect will decreasing reactor water level to just below the steam separators have on natural circulation flow rate?

A. Flow rate will significantly decrease due to the loss of communication between the annulus and the core.

B. Flow rate will decrease initially and then increase to a new equilibrium value slightly less than the original flow rate.

C. Flow rate will increase to a new stable value as the temperature of the water in the core increases to a new stable value.

D. Flow rate will <u>not</u> be significantly affected because the thermal driving head is primarily dependent on the differential temperature between the core and the annulus.

ANSWER: A.

TOPIC: 293008
KNOWLEDGE: K1.37 [3.2/3.4]
QID: B3086

After operating at a high power level for several weeks, a reactor was shut down several days ago and cooled down to repair a steam line leak. Shutdown cooling water pumps are currently being used to maintain reactor temperature and pressure. The pumps will be stopped in 30 minutes to test repairs.

What action, if any, should be taken to enhance natural circulation cooling during the test, and why?

A. No action is necessary; the increase of density in the downcomer and the reduction of density in the core region will easily support natural circulation.

B. No action is necessary; as the density of the mixture in the core region increases, the liquid in the downcomer will flow into the core.

C. Raise reactor vessel pressure to allow vessel relief valves to lift to create a heat sink for decay heat while control rod drive flow maintains inventory.

D. Raise reactor vessel water level above the bottom of the steam separators to provide a liquid flow path from the inside to the outside of the core shroud.

ANSWER: D.

TOPIC: 293009
KNOWLEDGE: K1.01 [2.1/2.5]
QID: B1092

In a reactor operating at full power, the fuel bundle with the highest power always has the...

A. greatest critical power ratio.

B. greatest radial peaking factor.

C. smallest linear heat generation rate.

D. smallest maximum average planar linear heat generation rate.

ANSWER: B.

TOPIC: 293009
KNOWLEDGE: K1.01 [2.1/2.5]
QID: B1592

The radial peaking factor for a fuel bundle is expressed mathematically as...

A. $\frac{\text{core average bundle power}}{\text{individual bundle power}}$

B. $\frac{\text{peak nodal power}}{\text{core average nodal power}}$

C. $\frac{\text{core average nodal power}}{\text{peak nodal power}}$

D. $\frac{\text{individual bundle power}}{\text{core average bundle power}}$

ANSWER: D.

TOPIC: 293009
KNOWLEDGE: K1.01 [2.1/2.5]
QID: B2392

In a reactor operating at full power, the fuel bundle with the lowest power always has the smallest...

A. critical power ratio.

B. radial peaking factor.

C. axial peaking factor.

D. critical heat flux.

ANSWER: B.

TOPIC: 293009
KNOWLEDGE: K1.01 [2.1/2.5]
K1.02 [2.2/2.6]
QID: B2592

A reactor is operating at steady-state 80 percent power near the beginning of a fuel cycle with core power distribution peaked radially in the center of the core and axially in the bottom half of the core. Only reactor recirculation flow rate adjustments will be used to maintain constant reactor power over the next two months.

Neglecting any change in reactor poison distribution, during the next two months the maximum radial peaking factor will _____; and the maximum axial peaking factor will _____.

A. increase; decrease

B. increase; increase

C. decrease; decrease

D. decrease; increase

ANSWER: C.

TOPIC: 293009
KNOWLEDGE: K1.01 [2.1/2.5]
QID: B2892

In a reactor operating at full power, the fuel bundle with the greatest radial peaking factor always has the...

A. greatest power.

B. greatest critical power ratio.

C. smallest axial peaking factor.

D. smallest linear heat generation rate.

ANSWER: A.

TOPIC: 293009
KNOWLEDGE: K1.01 [2.1/2.5]
K1.02 [2.2/2.6]
QID: B2992

A reactor is initially operating at steady-state 40 percent power with power distribution peaked both radially and axially in the center of the core. Reactor power is then increased to 70 percent over the next two hours using only reactor recirculation flow rate adjustments for reactivity control. Neglect any effect from changes in reactor poisons.

During the power increase, the location of the maximum core radial peaking factor will _____ of the core; and the location of the maximum core axial peaking factor will _____ of the core.

A. shift to the periphery; move toward the bottom

B. shift to the periphery; move toward the top

C. remain near the center; move toward the bottom

D. remain near the center; move toward the top

ANSWER: D.

TOPIC: 293009
KNOWLEDGE: K1.01 [2.1/2.5]
QID: B3492

A reactor is operating at steady-state 80 percent power with the radial power distribution peaked in the center of the core. Reactor power is then decreased to 60 percent over the next two hours by (1) reducing reactor recirculation flow rate by 10 percent, and (2) partially inserting a group of centrally-located deep control rods.

Compared with the previous operation at 80 percent power, when power is stabilized at 60 percent the value of the core maximum radial peaking factor will be _____; and the primary contributor to the change in the value of the core maximum radial peaking factor will be the change in _____.

A. smaller; recirculation flow

B. smaller; control rod position

C. larger; recirculation flow

D. larger; control rod position

ANSWER: B.

TOPIC: 293009
KNOWLEDGE: K1.02 [2.2/2.6]
QID: B892

The axial peaking factor for a node of a fuel bundle is expressed mathematically as...

A. $\frac{\text{core average bundle power}}{\text{peak nodal power}}$

B. $\frac{\text{peak nodal power}}{\text{core average bundle power}}$

C. $\frac{\text{bundle average nodal power}}{\text{nodal power}}$

D. $\frac{\text{nodal power}}{\text{bundle average nodal power}}$

ANSWER: D.

TOPIC: 293009
KNOWLEDGE: K1.03 [2.1/2.5]
QID: B1492

The ratio of the highest pin heat flux in a node to the average pin heat flux in the same node is called the _____ peaking factor.

A. local

B. radial

C. axial

D. total

ANSWER: A.

TOPIC: 293009
KNOWLEDGE: K1.04 [2.2/2.6]
QID: B3294

A BWR core consists of 30,000 fuel rods; each fuel rod has an active length of 12 feet. The core is producing 1,800 MW of thermal power. If the total peaking factor for a node is 2.0, what is the maximum local linear power density being produced in the node?

A. 4.0 kW/ft

B. 6.0 kW/ft

C. 8.0 kW/ft

D. 10.0 kW/ft

ANSWER: D.

TOPIC: 293009
KNOWLEDGE: K1.04 [2.2/2.6]
QID: B3793

A BWR core consists of 30,000 fuel rods. Each fuel rod has an active length of 12 feet. The core is producing 1,800 MW of thermal power. If the total peaking factor for a node is 1.6, what is the maximum local linear power density being produced in the node?

A. 4.0 kW/ft

B. 6.0 kW/ft

C. 8.0 kW/ft

D. 10.0 kW/ft

ANSWER: C.

TOPIC: 293009
KNOWLEDGE: K1.04 [2.2/2.6]
QID: B4447

A reactor is operating at its licensed thermal limit of 2,200 MW. The linear heat generation rate (LHGR) limit is 13.0 kW/ft.

Given:

- The reactor core contains 560 fuel bundles.
- Each bundle contains 62 fuel rods, each with an active length of 12.5 feet
- The highest total peaking factors are at the following core locations:

  Location A: 2.9
  Location B: 2.7
  Location C: 2.5
  Location D: 2.3

Which one of the following describes the operating condition of the core relative to the LHGR limit?

A. All locations in the core are operating below the LHGR limit.

B. Only location A has exceeded the LHGR limit while the remainder of the core is operating below the limit.

C. Locations A and B have exceeded the LHGR limit while the remainder of the core is operating below the limit.

D. Locations A, B, and C have exceeded the LHGR limit while the remainder of the core is operating below the limit.

ANSWER: C.

TOPIC: 293009
KNOWLEDGE: K1.04 [2.2/2.6]
QID: B4948

A BWR core consists of 30,000 fuel rods; each fuel rod has an active length of 12 feet. The core is producing 1,350 MW of thermal power. If the total peaking factor for a node is 1.6, what is the maximum local linear power density being produced in the node?

A. 4.0 kW/ft

B. 6.0 kW/ft

C. 8.0 kW/ft

D. 10.0 kW/ft

ANSWER: B.

TOPIC: 293009
KNOWLEDGE: K1.04 [2.2/2.6]
QID: B5247

A reactor is operating at 3,400 MW thermal power. The linear heat generation rate (LHGR) limit is 14.7 kW/ft.

Given:

- The reactor core contains 640 fuel bundles.
- Each bundle contains 62 fuel rods, each with an active length of 12.5 feet
- The highest total peaking factors are at the following core locations:

  Location A: 2.4
  Location B: 2.3
  Location C: 2.2
  Location D: 2.1

Which one of the following describes the operating conditions in the core relative to the LHGR limit?

A. All locations in the core are operating below the LHGR limit.

B. Location A has exceeded the LHGR limit while the remainder of the core is operating below the limit.

C. Locations A and B have exceeded the LHGR limit while the remainder of the core is operating below the limit.

D. Locations A, B, and C have exceeded the LHGR limit while the remainder of the core is operating below the limit.

ANSWER: D.

TOPIC: 293009
KNOWLEDGE: K1.04 [2.2/2.6]
QID: B6247 (P6249)

A reactor is operating at steady-state conditions in the power range with the following average temperatures in a core plane:

$T_{coolant}$ = 550°F
$T_{fuel\ centerline}$ = 1,680°F

Assume that the fuel rod heat transfer coefficients and reactor coolant temperatures are equal throughout the core plane. If the maximum total peaking factor in the core plane is 2.1, what is the maximum fuel centerline temperature in the core plane?

A. 2,923°F

B. 3,528°F

C. 4,078°F

D. 4,683°F

ANSWER: A.

TOPIC: 293009
KNOWLEDGE: K1.05 [3.3/3.5]
QID: B1893 (P1395)

Thermal limits are established to protect the reactor, and thereby protect the public during nuclear power plant operations, which include...

A. normal operations only.

B. normal and abnormal operations only.

C. normal, abnormal, and postulated accident operations only.

D. normal, abnormal, postulated and unpostulated accident operations.

ANSWER: C.

TOPIC: 293009
KNOWLEDGE: K1.06 [3.4/3.8]
QID: B94

Linear heat generation rate is the...

A. ratio of the average power per fuel rod divided by the associated fuel bundle power.

B. ratio of the power produced in a given fuel bundle divided by total core thermal power.

C. sum of the power produced by all fuel rods in a given fuel bundle at a specific planar cross section.

D. sum of the power per unit area for each unit area of the fuel cladding for a unit length of a fuel rod.

ANSWER: D.

TOPIC: 293009
KNOWLEDGE: K1.06 [3.4/3.8]
QID: B296

The linear heat generation rate (LHGR) for a reactor core is acceptable if _____ is being maintained at _____.

A. $LHGR_{limit}/LHGR_{measured}$; 0.95

B. $LHGR_{measured}/LHGR_{limit}$; 1.05

C. $LHGR_{limit}/LHGR_{measured}$; 1.10

D. $LHGR_{measured}/LHGR_{limit}$; 1.15

ANSWER: C.

TOPIC: 293009
KNOWLEDGE: K1.07 [2.8/3.6]
QID: B295

Operating a reactor below the linear heat generation rate thermal limit prevents...

A. cracking of the fuel cladding, due to high stress from fuel pellet expansion.

B. melting of the fuel cladding, due to cladding temperature exceeding 2,200°F during an anticipated transient without a scram.

C. cracking of the fuel cladding, due to a lack of cooling caused by departure from nucleate boiling.

D. melting of the fuel cladding, due to a lack of cooling following a loss of coolant accident.

ANSWER: A.

TOPIC: 293009
KNOWLEDGE: K1.07 [2.8/3.6]
QID: B392

Which one of the following limits takes into consideration fuel pellet swell effects?

A. Average gain adjustment factor

B. Maximum linear heat generation rate

C. Rated thermal power

D. Minimum critical power ratio

ANSWER: B.

TOPIC: 293009
KNOWLEDGE: K1.07 [2.8/3.6]
QID: B894

Which one of the following must be maintained within the technical specification limit to ensure that fuel cladding plastic strain (deformation) is limited to 1 percent?

A. Average planar linear heat generation rate

B. Linear heat generation rate

C. Minimum critical power ratio safety limit

D. Minimum critical power ratio operating limit

ANSWER: B.

TOPIC: 293009
KNOWLEDGE: K1.07 [2.8/3.6]
QID: B1093

Which one of the following is responsible for the fuel cladding failure that results from operating the reactor above the limit for linear heat generation rate?

A. Fission product gas expansion causes fuel rod internal design pressure to be exceeded.

B. Corrosion buildup on the cladding surface reduces heat transfer and promotes transition boiling.

C. The zircaloy-steam reaction causes accelerated oxidation of the cladding at high temperatures.

D. The difference between thermal expansion rates of the fuel pellets and the cladding causes severe stress.

ANSWER: D.

TOPIC: 293009
KNOWLEDGE: K1.07 [2.8/3.6]
QID: B1692

Maintaining the linear heat generation rate below the thermal limit ensures that...

A. peak cladding temperature after a design basis loss of coolant accident will not exceed 2,200°F.

B. during transients, more than 99.97 percent of the fuel rods will avoid transition boiling.

C. plastic strain of the cladding will not exceed 1 percent.

D. peaking factors will not exceed those assumed in the safety analysis.

ANSWER: C.

TOPIC: 293009
KNOWLEDGE: K1.08 [3.0/3.4]
QID: B592

If the linear heat generation rate (LHGR) limiting condition for operation is exceeded, the most probable type of fuel cladding failure is...

A. cracking, due to high stress.

B. gross failure, due to a lack of cooling.

C. embrittlement, due to excessive oxidation.

D. distortion, due to inadequate cooling.

ANSWER: A.

TOPIC: 293009
KNOWLEDGE: K1.10 [3.3/3.7]
QID: B297

The amount of heat stored in the fuel, resulting from the operating kW/foot in the fuel prior to a scram, is measured by the...

A. average planar linear heat generation rate (APLHGR).

B. linear heat generation rate (LHGR) multiplied by the total peaking factor.

C. core fraction of limiting power density.

D. APLHGR-to-MAPLHGR ratio.

ANSWER: A.

TOPIC: 293009
KNOWLEDGE: K1.11 [2.8/3.6]
QID: B195

Which one of the following must be maintained within limits to ensure that peak cladding temperature will not exceed 2,200°F after a design basis loss of coolant accident?

A. Linear heat generation rate

B. Average planar linear heat generation rate

C. Minimum critical power ratio

D. Maximum fraction of limiting critical power ratio

ANSWER: B.

TOPIC: 293009
KNOWLEDGE: K1.11 [2.8/3.6]
QID: B1393

Maintaining the average planar linear heat generation rate (APLHGR) below the technical specification limit ensures that...

A. plastic strain (deformation) of the cladding will not exceed 1 percent.

B. axial peaking factors will not exceed those assumed in the safety analyses.

C. during transients, more than 99.9 percent of the fuel rods are expected to avoid transition boiling.

D. cladding temperature after a design basis loss of coolant accident will not exceed 2,200°F.

ANSWER: D.

TOPIC: 293009
KNOWLEDGE: K1.11 [2.8/3.6]
QID: B1793 (P396)

The 2,200°F maximum fuel cladding temperature limit is imposed because...

A. 2,200°F is approximately 500°F below the fuel cladding melting temperature.

B. the rate of the zircaloy-steam reaction increases significantly at temperatures above 2,200°F.

C. any cladding temperature higher than 2,200°F correlates to a fuel centerline temperature above the fuel melting point.

D. the thermal conductivity of zircaloy decreases rapidly at temperatures above 2,200°F.

ANSWER: B.

TOPIC: 293009
KNOWLEDGE: K1.11 [2.8/3.6]
QID: B2194 (P2194)

Which one of the following describes the basis for the 2,200°F maximum fuel cladding temperature limit?

A. 2,200°F is approximately 500°F below the fuel cladding melting temperature.

B. The material strength of zircaloy decreases rapidly at temperatures above 2,200°F.

C. The rate of the zircaloy-water reaction increases significantly at temperatures above 2,200°F.

D. At the normal operating pressure of the reactor vessel, a cladding temperature above 2,200°F indicates that the critical heat flux has been exceeded.

ANSWER: C.

TOPIC: 293009
KNOWLEDGE: K1.11 [2.8/3.6]
QID: B2292 (P2995)

Which one of the following describes the basis for the 2,200°F maximum fuel cladding temperature limit?

A. 2,200°F is approximately 500°F below the fuel cladding melting temperature.

B. The rate of the zircaloy-steam reaction increases significantly above 2,200°F.

C. If fuel cladding temperature reaches 2,200°F, the onset of transition boiling is imminent.

D. The differential expansion between the fuel pellets and the fuel cladding becomes excessive at temperatures greater than 2,200°F.

ANSWER: B.

TOPIC: 293009
KNOWLEDGE: K1.11 [2.8/3.6]
QID: B7670

Which one of the following parameters is limited to protect against fuel rod failure from brittle fracture when emergency cooling is initiated during a loss of coolant accident?

A. Linear heat generation rate (LHGR)

B. Average planar linear heat generation rate (APLHGR)

C. Critical power ratio (CPR)

D. Fraction of limiting critical power ratio (FLCPR)

ANSWER: B.

TOPIC: 293009
KNOWLEDGE: K1.12 [3.1/3.6]
QID: B2595

If a reactor is operating above its maximum average planar linear heat generation rate (MAPLHGR) prior to a loss of coolant accident, fuel pellet centerline temperature may reach 4,200°F and fuel cladding temperature may reach 2,300°F during the accident.

Which one of the following describes the likely cladding failure mechanism if the above temperatures are reached?

A. Excessive fuel pellet expansion.

B. Excessive plastic strain in the cladding.

C. Excessive embrittlement of the cladding.

D. Excessive cadmium and iodine attack on the cladding.

ANSWER: C.

TOPIC: 293009
KNOWLEDGE: K1.13 [3.1/3.6]
QID: B97

Operating a reactor within the limits specified by the maximum average planar linear heat generation rate (MAPLHGR) prevents...

A. exceeding 1 percent plastic strain in the cladding.

B. exceeding a peak fuel temperature of 2,200°F.

C. the onset of transition boiling in the upper core.

D. exceeding a peak cladding temperature of 2,200°F.

ANSWER: D.

TOPIC: 293009
KNOWLEDGE: K1.13 [3.1/3.6]
QID: B896

Which one of the following is indicated when the average planar linear heat generation rate (APLHGR)-to-maximum APLHGR ratio is less than 1.0?

A. Linear heat generation rate (LHGR) limit has <u>not</u> been exceeded.

B. LHGR limit has been exceeded.

C. APLHGR limit has <u>not</u> been exceeded.

D. APLHGR limit has been exceeded.

ANSWER: C.

TOPIC: 293009
KNOWLEDGE: K1.13 [3.1/3.6]
QID: B1595

Which one of the following is indicated when the maximum average power ratio (MAPRAT) is greater than 1.0?

A. The linear heat generation rate (LHGR) limit has not been exceeded.

B. The average planar linear heat generation rate (APLHGR) limit has not been exceeded.

C. The LHGR limit has been exceeded.

D. The APLHGR limit has been exceeded.

ANSWER: D.

TOPIC: 293009
KNOWLEDGE: K1.13 [3.1/3.6]
QID: B1795

Which one of the following is indicated when the maximum average power ratio (MAPRAT) is less than 1.0?

A. The linear heat generation rate (LHGR) limit has been exceeded.

B. The average planar linear heat generation rate (APLHGR) limit has been exceeded.

C. The APLHGR limit has not been exceeded.

D. The LHGR limit has not been exceeded.

ANSWER: C.

TOPIC: 293009
KNOWLEDGE: K1.14 [2.2/2.7]
QID: B393

At high core exposures, the maximum average planar linear heat generation rate (MAPLHGR) limit decreases with increasing core exposure. What is the reason for this decrease?

A. Cracking of fuel pellets at higher core exposures permits additional volume for fission product gases.

B. The zirconium-steam chemical reaction in cladding requires higher temperatures at higher core exposures.

C. Fission product decay heat level decreases at higher core exposures.

D. Fission product gases lower the overall heat transfer coefficient of the fuel rod fill gas.

ANSWER: D.

TOPIC: 293009
KNOWLEDGE: K1.15 [2.6/3.1]
QID: B792

During a loss of coolant accident, which one of the following modes of heat transfer provides the most core cooling when fuel rods are <u>not</u> in contact with the coolant?

A. Radiation

B. Emission

C. Convection

D. Conduction

ANSWER: A.

TOPIC: 293009
KNOWLEDGE: K1.16 [2.4/2.8]
QID: B394 (P383)

Refer to the drawing of a fuel rod and coolant flow channel (see figure below).

Given the following initial core parameters:

Reactor power = 100 percent
$T_{coolant}$ = 500°F
$T_{fuel\ centerline}$ = 3,000°F

What would the fuel centerline temperature be if the total fuel-to-coolant thermal conductivity doubled? (Assume reactor power and $T_{coolant}$ are constant.)

A. 1,000°F

B. 1,250°F

C. 1,500°F

D. 1,750°F

ANSWER: D.

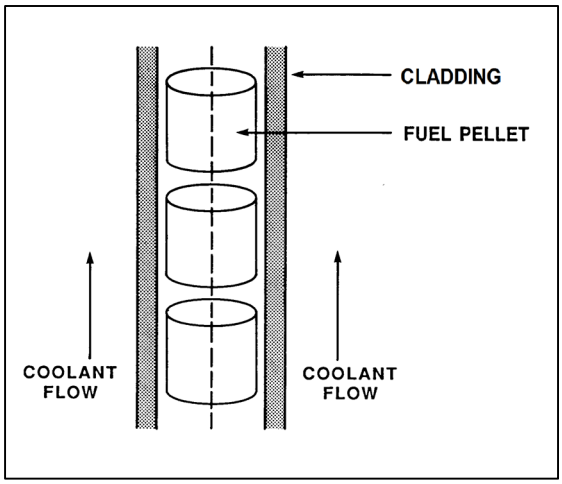

TOPIC: 293009
KNOWLEDGE: K1.16 [2.4/2.8]
QID: B495 (P495)

Refer to the drawing of a fuel rod and coolant flow channel (see figure below).

Given the following initial core parameters:

Reactor power = 100 percent
$T_{coolant}$ = 500°F
$T_{fuel\ centerline}$ = 2,500°F

What would the fuel centerline temperature be if the total fuel-to-coolant thermal conductivity doubled? (Assume reactor power and $T_{coolant}$ are constant.)

A. 1,250°F

B. 1,300°F

C. 1,400°F

D. 1,500°F

ANSWER: D.

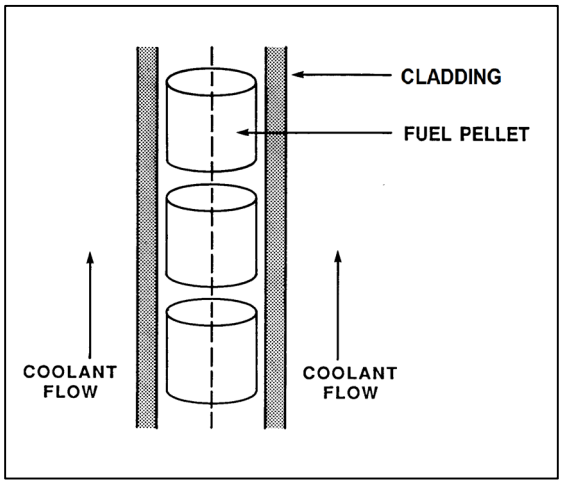

TOPIC: 293009
KNOWLEDGE: K1.16 [2.4/2.8]
QID: B1395 (P1894)

Which one of the following describes the fuel-to-coolant thermal conductivity for a fuel rod at the end of a fuel cycle (EOC) when compared to the beginning of the same fuel cycle (BOC)?

A. Smaller at EOC, due to fuel pellet densification.

B. Smaller at EOC, due to contamination of fill gas with fission product gases.

C. Larger at EOC, due to reduction in gap between the fuel pellets and cladding.

D. Larger at EOC, due to a greater temperature difference between the fuel pellets and coolant.

ANSWER: C.

TOPIC: 293009
KNOWLEDGE: K1.16 [2.4/2.8]
QID: B1594 (P1594)

Refer to the drawing of a fuel rod and coolant flow channel at (see figure below).

Given the following initial core parameters:

Reactor power = 100 percent
$T_{coolant}$ = 500°F
$T_{fuel\ centerline}$ = 2,700°F

What would the fuel centerline temperature be if the total fuel-to-coolant thermal conductivity doubled? (Assume reactor power and $T_{coolant}$ are constant.)

A. 1,100°F

B. 1,350°F

C. 1,600°F

D. 1,850°F

ANSWER: C.

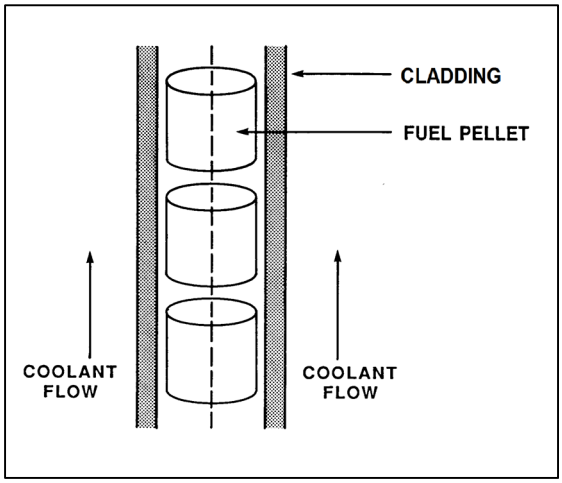

TOPIC: 293009
KNOWLEDGE: K1.16 [2.4/2.8]
QID: B1697 (P3395)

Refer to the drawing of a fuel rod and coolant flow channel (see figure below).

Given the following initial core parameters:

Reactor power = 50 percent
$T_{coolant}$ = 550°F
$T_{fuel\ centerline}$ = 2,750°F

What will the fuel centerline temperature be if the total fuel-to-coolant thermal conductivity doubles? (Assume reactor power and $T_{coolant}$ are constant.)

A. 1,100°F

B. 1,375°F

C. 1,525°F

D. 1,650°F

ANSWER: D.

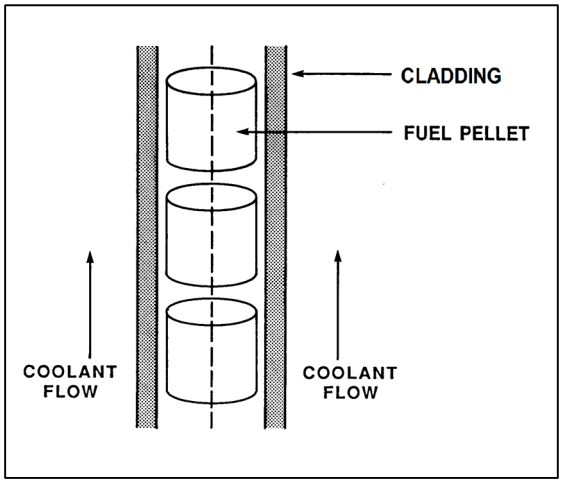

TOPIC: 293009
KNOWLEDGE: K1.16 [2.4/2.8]
QID: B1995 (P1994)

Refer to the drawing of a fuel rod and coolant flow channel (see figure below).

Given the following initial core parameters:

Reactor power = 80 percent
$T_{coolant}$ = 540°F
$T_{fuel\ centerline}$ = 2,540°F

What would the fuel centerline temperature be if the total fuel-to-coolant thermal conductivity doubled? (Assume reactor power and $T_{coolant}$ are constant.)

A. 1,270°F

B. 1,370°F

C. 1,440°F

D. 1,540°F

ANSWER: D.

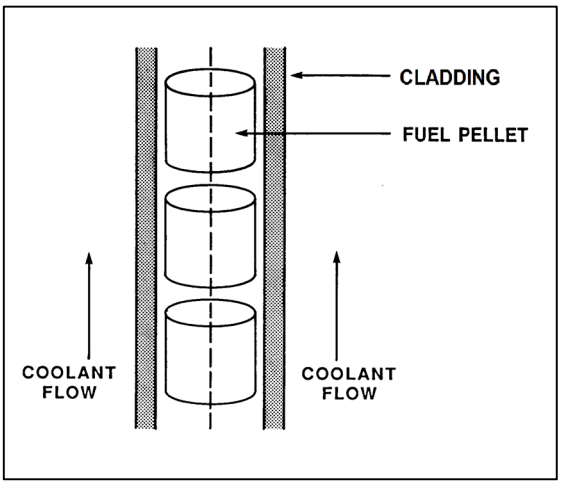

TOPIC: 293009
KNOWLEDGE: K1.16 [2.4/2.8]
QID: B2192 (P2195)

Which one of the following describes the fuel-to-coolant thermal conductivity for a fuel rod at the beginning of a fuel cycle (BOC) compared to the end of a fuel cycle (EOC)?

A. Larger at BOC, due to a higher fuel pellet density.

B. Larger at BOC, due to lower contamination of fuel rod fill gas with fission product gases.

C. Smaller at BOC, due to a larger gap between the fuel pellets and cladding.

D. Smaller at BOC, due to a smaller corrosion film on the surface of the fuel rods.

ANSWER: C.

TOPIC: 293009
KNOWLEDGE: K1.16 [2.4/2.8]
QID: B2394 (P2395)

Refer to the drawing of a fuel rod and coolant flow channel (see figure below).

The reactor is shut down with the following parameter values:

$T_{coolant}$ = 320°F
$T_{fuel\ centerline}$ = 780°F

What would the fuel centerline temperature be if the total fuel-to-coolant thermal conductivity doubled? (Assume core decay heat level and $T_{coolant}$ are constant.)

A. 550°F

B. 500°F

C. 450°F

D. 400°F

ANSWER: A.

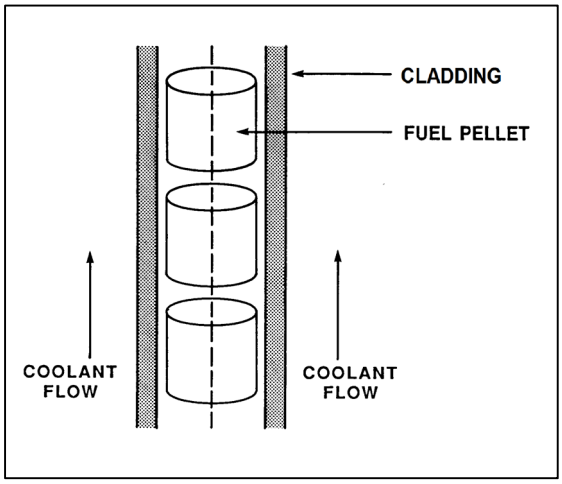

TOPIC: 293009
KNOWLEDGE: K1.16 [2.4/2.8]
QID: B2696 (P2296)

Refer to the drawing of a fuel rod and coolant flow channel (see figure below).

Given the following initial core parameters:

Reactor power = 60 percent
$T_{coolant}$ = 560°F
$T_{fuel\ centerline}$ = 2,500°F

What would the fuel centerline temperature be if the total fuel-to-coolant thermal conductivity doubled? (Assume reactor power and $T_{coolant}$ are constant.)

A. 1,080°F

B. 1,250°F

C. 1,530°F

D. 1,810°F

ANSWER: C.

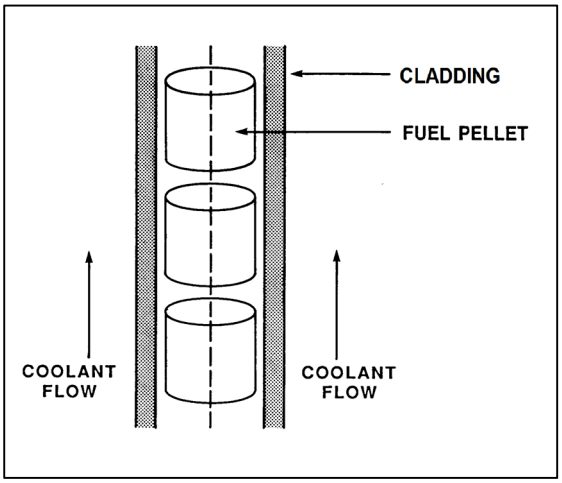

TOPIC: 293009
KNOWLEDGE: K1.16 [2.4/2.8]
QID: B2794

Given the following initial core parameters for a segment of a fuel rod:

Power density = 2 kW/ft
$T_{coolant}$ = 540°F
$T_{fuel\ centerline}$ = 1,200°F

Reactor power is increased such that the following core parameters now exist for the fuel rod segment:

Power density = 3 kW/ft
$T_{coolant}$ = 540°F
$T_{fuel\ centerline}$ = ?

Assuming void fraction surrounding the fuel rod segment does <u>not</u> change, what will be the new stable $T_{fuel\ centerline}$?

A. 1,380°F

B. 1,530°F

C. 1,670°F

D. 1,820°F

ANSWER: B.

TOPIC: 293009
KNOWLEDGE: K1.16 [2.4/2.8]
QID: B2896

Given the following initial core parameters for a segment of a fuel rod:

Power density = 2 kW/ft
$T_{coolant}$ = 540°F
$T_{fuel\ centerline}$ = 1,800°F

Reactor power is increased such that the following core parameters now exist for the fuel rod segment:

Power density = 4 kW/ft
$T_{coolant}$ = 540°F
$T_{fuel\ centerline}$ = ?

Assuming void fraction surrounding the fuel rod segment does <u>not</u> change, what will be the new stable $T_{fuel\ centerline}$?

A. 2,520°F

B. 2,780°F

C. 3,060°F

D. 3,600°F

ANSWER: C.

TOPIC: 293009
KNOWLEDGE: K1.16 [2.4/2.8]
QID: B3193 (P3195)

Refer to the drawing of a fuel rod and coolant flow channel (see figure below).

The reactor is shut down at the beginning of a fuel cycle with the following average parameter values:

$T_{coolant}$ = 440°F
$T_{fuel\ centerline}$ = 780°F

What will the fuel centerline temperature be at the end of the fuel cycle with the same coolant temperature and reactor decay heat conditions if the total fuel-to-coolant thermal conductivity doubles?

A. 610°F

B. 580°F

C. 550°F

D. 520°F

ANSWER: A.

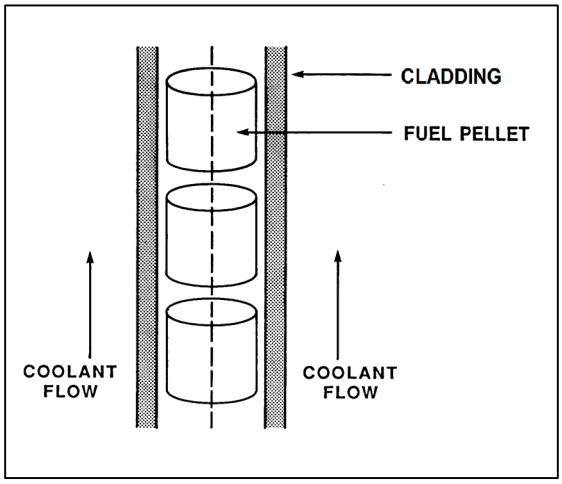

TOPIC: 293009
KNOWLEDGE: K1.16 [2.4/2.8]
QID: B3893

Refer to the drawing of a fuel rod and coolant flow channel (see figure below).

Given the following initial stable core parameters:

Reactor power = 50 percent
$T_{coolant}$ = 550°F
$T_{fuel\ centerline}$ = 1,250°F

Assume the total heat transfer coefficient and the reactor coolant temperature do not change. What will the stable fuel centerline temperature be if reactor power is increased to 75 percent?

A. 1,425°F

B. 1,600°F

C. 1,750°F

D. 1,875°F

ANSWER: B.

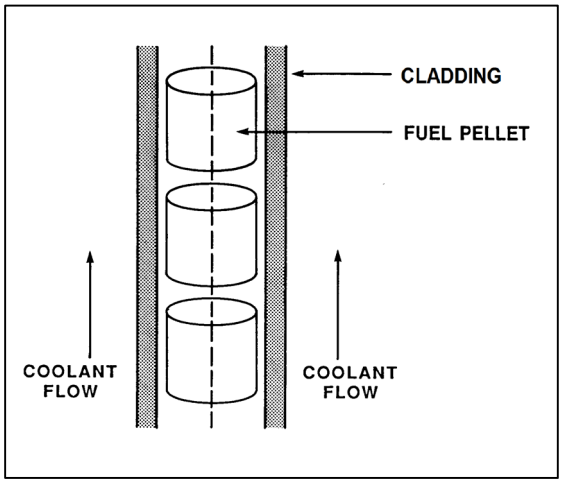

TOPIC: 293009
KNOWLEDGE: K1.17 [3.3/3.7]
QID: B145

The fuel bundle power that will cause the onset of transition boiling somewhere in the fuel bundle is the...

A. technical specification limit.

B. critical power.

C. maximum fraction of limiting power density.

D. maximum power density.

ANSWER: B.

TOPIC: 293009
KNOWLEDGE: K1.17 [3.3/3.7]
QID: B1997

Which one of the following is most likely to result in fuel cladding damage?

A. Operating at 110 percent of reactor vessel design pressure.

B. An inadvertent reactor scram from 100 percent power.

C. Operating with a fuel bundle power greater than the critical power.

D. Operating with saturated nucleate boiling occurring in a fuel bundle.

ANSWER: C.

TOPIC: 293009
KNOWLEDGE: K1.18 [3.2/3.7]
QID: B298

Which one of the following is a mathematical expression for the critical power ratio?

A. Critical power/Actual bundle power

B. Actual bundle power/Critical power

C. Average bundle power/Critical power

D. Critical power/Average bundle power

ANSWER: A.

TOPIC: 293009
KNOWLEDGE: K1.19 [2.8/3.6]
QID: B597

Which one of the following adverse conditions is avoided primarily by maintaining the minimum critical power ratio within specified limits?

A. Excessive plastic strain on the fuel cladding

B. Excessive cladding creep

C. Excessive decay heat in the fuel

D. Excessive fuel cladding temperatures

ANSWER: D.

TOPIC: 293009
KNOWLEDGE: K1.19 [2.8/3.6]
QID: B694

The purpose of maintaining the critical power ratio greater than 1.0 is to...

A. prevent fuel cladding failure during analyzed accident conditions.

B. avoid the onset of transition boiling during expected operating transients.

C. limit peak cladding temperatures to less than 2,200°F during analyzed accident conditions.

D. prevent melting at the fuel pellet centerline during expected operating transients.

ANSWER: B.

TOPIC: 293009
KNOWLEDGE: K1.19 [2.8/3.6]
QID: B798

Which thermal limit is maintained to ensure the core does <u>not</u> experience transition boiling?

A. Minimum critical power ratio

B. Maximum average planar linear heat generation ratio (MAPLHGR)

C. Maximum fraction of limiting power density

D. APLHGR-to-MAPLHGR ratio

ANSWER: A.

TOPIC: 293009
KNOWLEDGE: K1.19 [2.8/3.6]
QID: B2796

If a reactor is operating with the minimum critical power ratio (MCPR) at its transient limit (or safety limit), which one of the following is indicated?

A. None of the fuel rods are experiencing critical heat flux.

B. A small fraction of the fuel rods may be experiencing critical heat flux.

C. All radioactive fission products are being contained within the reactor fuel.

D. All radioactive fission products are being contained within either the reactor fuel or the reactor vessel.

ANSWER: B.

TOPIC: 293009
KNOWLEDGE: K1.20 [3.1/3.6]
QID: B1196

Bundle critical power ratio must be maintained _____ 1.0 to prevent fuel damage caused by a rapid increase in the temperature of the _____.

A. greater than; fuel pellets

B. less than; fuel pellets

C. greater than; fuel cladding

D. less than; fuel cladding

ANSWER: C.

TOPIC: 293009
KNOWLEDGE: K1.23 [2.8/3.2]
QID: B96

Which one of the following parameter changes will initially increase the critical power of a fuel bundle?

A. The subcooling of the coolant entering the bundle decreases.

B. The local peaking factor increases.

C. The coolant flow rate through the bundle increases.

D. The axial power peak shifts from the bottom to the top of the bundle.

ANSWER: C.

TOPIC: 293009
KNOWLEDGE: K1.23 [2.8/3.2]
QID: B2498

A nuclear power plant is operating at 90 percent power near the end of a fuel cycle when reactor recirculation flow rate suddenly decreases by 10 percent. Assuming the reactor does not scram immediately, critical power will initially _____; and reactor power will initially _____.

A. increase; increase

B. increase; decrease

C. decrease; increase

D. decrease; decrease

ANSWER: D.

TOPIC: 293009
KNOWLEDGE: K1.24 [2.7/3.2]
QID: B995

During normal power operations, a reactor pressure increase causes critical power to _____ because the latent heat of vaporization for the reactor coolant _____.

A. increase; decreases

B. decrease; decreases

C. increase; increases

D. decrease; increases

ANSWER: B.

TOPIC: 293009
KNOWLEDGE: K1.24 [2.7/3.2]
QID: B1297

A nuclear power plant is operating at 100 percent load when a turbine trip occurs with no steam bypass valve actuation. Assuming the reactor does not scram immediately, critical power ratio will initially...

A. increase, due to an increased latent heat of vaporization.

B. decrease, due to a decreased latent heat of vaporization.

C. increase, due to an increased reactor power.

D. decrease, due to a decreased reactor power.

ANSWER: B.

TOPIC: 293009
KNOWLEDGE: K1.24 [2.7/3.2]
QID: B2398

A nuclear power plant is operating at 90 percent power near the end of a fuel cycle when a turbine control system malfunction opens the turbine control valves an additional 5 percent. Assuming the reactor does not scram immediately, the critical power ratio will initially _____ due to a(n) _____ latent heat of vaporization for the reactor coolant.

A. increase; increased

B. increase; decreased

C. decrease; increased

D. decrease; decreased

ANSWER: A.

TOPIC: 293009
KNOWLEDGE: K1.24 [2.7/3.2]
QID: B2998

A nuclear power plant is operating at 90 percent power near the end of a fuel cycle when a signal error causes the turbine control system to throttle the turbine control valves 5 percent in the closed direction. Assuming the turbine control valves stabilize in their new position and the reactor does <u>not</u> scram, the critical power ratio will initially...

A. increase, because reactor power initially increases.

B. decrease, because reactor power initially decreases.

C. increase, because the reactor coolant latent heat of vaporization initially increases.

D. decrease, because the reactor coolant latent heat of vaporization initially decreases.

ANSWER: D.

TOPIC: 293009
KNOWLEDGE: K1.24 [2.7/3.2]
QID: B4749

A nuclear power plant is operating at 90 percent power at the end of core life when a signal error causes the turbine control system to open the turbine control valves an additional 5 percent. Assuming the reactor does not scram, the critical power ratio will initially...

A. increase, because reactor power initially increases.

B. decrease, because reactor power initially decreases.

C. increase, because the reactor coolant latent heat of vaporization initially increases.

D. decrease, because the reactor coolant latent heat of vaporization initially decreases.

ANSWER: C.

TOPIC: 293009
KNOWLEDGE: K1.26 [2.6/3.1]
QID: B897

For a reactor operating at 100 percent power, which one of the following combinations of axial power distribution and recirculation system flow rate will result in the smallest critical power ratio in a given fuel bundle? (Assume the maximum linear heat generation rate in the fuel bundle is the same for all cases.)

	Axial Power Distribution	Recirculation System Flow Rate
A.	Top-peaked	Low
B.	Top-peaked	High
C.	Bottom-peaked	Low
D.	Bottom-peaked	High

ANSWER: A.

TOPIC: 293009
KNOWLEDGE: K1.26 [2.6/3.1]
QID: B1396

If the axial power distribution in a fuel bundle shifts from bottom-peaked to top-peaked, the critical power will…

A. decrease to a new lower value.

B. decrease temporarily, then return to its initial value.

C. increase to a new higher value.

D. increase temporarily, then return to its initial value.

ANSWER: A.

TOPIC: 293009
KNOWLEDGE: K1.27 [2.7/3.3]
QID: B795

For what operational condition does the flow biasing correction factor (K_f) adjust the minimum critical power ratio?

A. Operation at less than rated steam flow rate.

B. Operation at greater than rated steam flow rate.

C. Operation at less than rated core flow rate.

D. Operation at greater than rated core flow rate.

ANSWER: C.

TOPIC: 293009
KNOWLEDGE: K1.29 [2.4/2.7]
QID: B996

The fuel thermal time constant describes the amount of time required for...

A. the fuel to change its rate of heat generation by 63 percent.

B. the fuel centerline temperature to undergo 63 percent of its total change resulting from a given power change.

C. the fuel cladding temperature to undergo 63 percent of its total change resulting from a given change in fuel temperature.

D. reactor power to undergo 63 percent of its total change resulting from a given reactivity insertion.

ANSWER: C.

TOPIC: 293009
KNOWLEDGE: K1.29 [2.4/2.7]
QID: B2496

The fuel thermal time constant specifies the amount of time required for...

A. a fuel bundle to achieve equilibrium temperature following a power change.

B. a fuel pellet to achieve equilibrium temperature following a power change.

C. the fuel centerline temperature to undergo most of its total change following a power change.

D. the fuel cladding temperature to undergo most of its total change following a power change.

ANSWER: D.

TOPIC: 293009
KNOWLEDGE: K1.30 [2.3/2.7]
QID: B1596

A step increase in reactor power caused a fuel rod surface temperature increase from 550°F to 580°F at steady-state conditions. The fuel thermal time constant is 6 seconds.

Which one of the following was the approximate fuel rod surface temperature 6 seconds after the power change?

A. 571°F

B. 569°F

C. 565°F

D. 561°F

ANSWER: B.

TOPIC: 293009
KNOWLEDGE: K1.30 [2.3/2.7]
QID: B2095

A step increase in reactor power caused a fuel rod surface temperature increase from 560°F to 590°F at steady-state conditions. The fuel thermal time constant is 6 seconds.

Which one of the following was the approximate fuel rod surface temperature 6 seconds after the power change?

A. 579°F

B. 575°F

C. 570°F

D. 567°F

ANSWER: A.

TOPIC: 293009
KNOWLEDGE: K1.30 [2.3/2.7]
QID: B2193

A step increase in reactor power caused a fuel rod surface temperature increase from 555°F to 585°F at steady-state conditions. The fuel thermal time constant is 6 seconds.

Which one of the following was the approximate fuel rod surface temperature 6 seconds after the power change?

A. 574°F

B. 570°F

C. 567°F

D. 563°F

ANSWER: A.

TOPIC: 293009
KNOWLEDGE: K1.30 [2.3/2.7]
QID: B2297

A step increase in reactor power caused a fuel rod surface temperature increase from 570°F to 590°F at steady-state conditions. The fuel thermal time constant is 6 seconds.

Which one of the following was the approximate fuel rod surface temperature 6 seconds after the power change?

A. 574°F

B. 577°F

C. 580°F

D. 583°F

ANSWER: D.

TOPIC: 293009
KNOWLEDGE: K1.31 [3.0/3.4]
QID: B396 (P394)

The pellet-to-cladding gap in fuel rod construction is designed to...

A. decrease fuel pellet densification and elongation.

B. reduce fission product gas pressure buildup.

C. increase heat transfer rate.

D. reduce internal cladding strain.

ANSWER: D.

TOPIC: 293009
KNOWLEDGE: K1.32 [2.9/3.3]
QID: B99

Which one of the following describes why the threshold power for pellet-clad interaction changes as fuel burnup increases?

A. The fuel pellet thermal conductivity is reduced significantly by irradiation.

B. Zirconium hydriding increases significantly as the oxide layer builds up on the cladding.

C. The buildup of certain fission product gases causes chemical embrittlement of the cladding.

D. Fuel pellet densification causes the middle of the pellet to expand outward against the cladding as the pellet length shrinks.

ANSWER: C.

TOPIC: 293009
KNOWLEDGE: K1.32 [2.9/3.3]
QID: B497

The presence of embrittling isotopes is one of the initiating factors of pellet-cladding interaction. Which one of the following describes the primary source of the embrittling isotopes?

A. Created during fission of the reactor fuel.

B. Introduced during the fuel manufacturing process.

C. Migrates from the reactor coolant through the cladding.

D. Produced as corrosion products inside the fuel rod.

ANSWER: A.

TOPIC: 293009
KNOWLEDGE: K1.32 [2.9/3.3]
QID: B2195

Which one of the following operations is most likely to cause significant pellet-cladding interaction?

A. Increasing reactor power from 20 percent to 50 percent near the beginning of a fuel cycle.

B. Increasing reactor power from 20 percent to 50 percent near the end of a fuel cycle.

C. Increasing reactor power from 70 percent to 100 percent near the beginning of a fuel cycle.

D. Increasing reactor power from 70 percent to 100 percent near the end of a fuel cycle.

ANSWER: D.

TOPIC: 293009
KNOWLEDGE: K1.33 [2.4/2.8]
QID: B796

Which one of the following is the primary purpose of the gap between the fuel pellets and the cladding.

A. Prevent contact between the fuel pellets and the cladding.

B. Increase heat transfer from the fuel pellets to the cladding.

C. Accommodate different expansion rates between the fuel pellets and the cladding.

D. Reduce diffusion of fission product gases through the cladding into the reactor coolant.

ANSWER: C.

TOPIC: 293009
KNOWLEDGE: K1.33 [2.4/2.8]
QID: B1696

What is the primary purpose of the gap between a fuel pellet and the surrounding cladding?

A. To allow insertion of fuel pellets into the fuel rods.

B. To provide a collection volume for fission product gases.

C. To maintain the design fuel thermal conductivity throughout the fuel cycle.

D. To accommodate different expansion rates in the fuel pellets and the cladding.

ANSWER: D.

TOPIC: 293009
KNOWLEDGE: K1.34 [2.3/2.6]
QID: B797

Which one of the following causes a reduction in the size of the gap between the fuel pellets and the fuel cladding over core life.

A. Contraction of the fuel rod, due to zirconium hydriding.

B. Expansion of the fuel pellets, due to fission product buildup.

C. Contraction of the fuel rod, due to fuel rod internal vacuum.

D. Expansion of the fuel pellets, due to densification.

ANSWER: B.

TOPIC: 293009
KNOWLEDGE: K1.34 [2.3/2.6]
QID: B6449 (P6449)

Consider a new fuel rod operating at a constant power level for several weeks. During this period, fuel pellet densification in the fuel rod causes the heat transfer rate from the fuel pellets to the cladding to _____; this change causes the average fuel temperature in the fuel rod to _____.

A. decrease; increase

B. decrease; decrease

C. increase; increase

D. increase; decrease

ANSWER: A.

TOPIC: 293009
KNOWLEDGE: K1.34 [2.3/2.6]
QID: B7630

If fuel pellet densification occurs in a fuel rod producing a constant power output, the average linear heat generation rate in the fuel rod will _____ because pellet densification causes fuel pellets to _____.

A. decrease; swell

B. decrease; shrink

C. increase; swell

D. increase; shrink

ANSWER: D.

TOPIC: 293009
KNOWLEDGE: K1.35 [2.2/2.6]
QID: B397

Studies of nuclear fuel rod damage revealed that two essential criteria for pellet-cladding interaction fuel damage are cladding stress and an embrittling interaction between two chemical agents and the zircaloy cladding.

What are the two chemical agents?

A. Iodine and cadmium

B. Cadmium and bromine

C. Bromine and ruthenium

D. Ruthenium and iodine

ANSWER: A.

TOPIC: 293009
KNOWLEDGE: K1.40 [2.8/3.3]
QID: B696

Gross cladding failure is avoided during a design basis loss of coolant accident by operation below the limit for...

A. total peaking factor.

B. linear heat generation rate.

C. operating critical power ratio.

D. average planar linear heat generation rate.

ANSWER: D.

TOPIC: 293009
KNOWLEDGE: K1.40 [2.8/3.3]
QID: B1497

Gross fuel cladding failure during a design basis loss of coolant accident is prevented by adhering to the...

A. linear heat generation rate limit.

B. maximum average planar linear heat generation rate limit.

C. minimum critical power ratio limit.

D. preconditioning interim operating management recommendations.

ANSWER: B.

TOPIC: 293009
KNOWLEDGE: K1.41 [2.8/3.3]
QID: B697

During a rapid increase in core flow rate in a reactor operating at 100 percent power, the most limiting thermal limit is the...

A. total peaking factor.

B. critical power ratio.

C. average planar linear heat generation rate.

D. linear heat generation rate.

ANSWER: B.

TOPIC: 293009
KNOWLEDGE: K1.41 [2.8/3.3]
QID: B1098

A nuclear power plant is operating at 60 percent reactor power. Which one of the following will result in the highest critical power ratio? (Assume neutron flux distribution does not change.)

A. A 25 percent power increase using only recirculation flow.

B. A 25 percent power increase using only control rods.

C. A 25 percent power decrease using only recirculation flow.

D. A 25 percent power decrease using only control rods.

ANSWER: D.

TOPIC: 293009
KNOWLEDGE: K1.41 [2.8/3.3]
QID: B1598

A nuclear power plant is operating at 60 percent reactor power. Which one of the following will result in the lowest critical power ratio? (Assume core neutron flux distribution does not change.)

A. A 25 percent power increase using only control rods.

B. A 25 percent power decrease using only control rods.

C. A 25 percent power increase using only recirculation flow.

D. A 25 percent power decrease using only recirculation flow.

ANSWER: A.

TOPIC: 293009
KNOWLEDGE: K1.42 [2.8/3.3]
QID: B498

In a reactor operating at 100 percent power, reactor pressure suddenly increases. Which one of the following is the most limiting thermal limit for these conditions?

A. Linear heat generation rate

B. Average planar linear heat generation rate

C. Critical power ratio

D. Preconditioning interim operating management recommendations

ANSWER: C.

TOPIC: 293009
KNOWLEDGE: K1.43 [2.9/3.4]
QID: B698

If cold water is suddenly injected into the reactor vessel while operating at 50 percent power, critical power will initially _____; and bundle power will initially _____.

A. increase; increase

B. decrease; increase

C. increase; decrease

D. decrease; decrease

ANSWER: A.

TOPIC: 293009
KNOWLEDGE: K1.43 [2.9/3.4]
QID: B1298

If reactor feedwater temperature suddenly decreases by 10°F during operation at 75 percent power, critical power will initially _____; and bundle power will initially _____.

A. increase; increase

B. decrease; increase

C. increase; decrease

D. decrease; decrease

ANSWER: A.

TOPIC: 293009
KNOWLEDGE: K1.43 [2.9/3.4]
QID: B1498

The most limiting thermal limit for a loss of feedwater heating transient is the...

A. average planar linear heat generation rate.

B. linear heat generation rate.

C. critical power ratio.

D. core thermal power.

ANSWER: C.

TOPIC: 293009
KNOWLEDGE: K1.43 [2.9/3.4]
QID: B2298

If reactor feedwater temperature suddenly increases by 10°F during operation at 75 percent power, critical power will initially _____; and bundle power will initially _____.

A. increase; increase

B. increase; decrease

C. decrease; increase

D. decrease; decrease

ANSWER: D.

TOPIC: 293010
KNOWLEDGE: K1.01 [2.4/2.8]
QID: B499 (P497)

Which one of the following comparisons will result in a higher probability for brittle fracture of the reactor vessel?

A. A high gamma flux in the reactor rather than a high neutron flux.

B. A high oxygen content in the reactor coolant rather than a low oxygen content.

C. A high material strength in the reactor vessel rather than a high material ductility.

D. A rapid 100°F reactor cooldown at a high temperature rather than at a low temperature.

ANSWER: C.

TOPIC: 293010
KNOWLEDGE: K1.01 [2.4/2.8]
QID: B2499 (P2496)

Brittle fracture of a low-carbon steel is more likely to occur when the temperature of the steel is _____ the nil-ductility transition temperature; and will normally occur when the applied stress is _____ the steel's yield strength (or yield stress) at room temperature.

A. less than; less than

B. less than; greater than

C. greater than; less than

D. greater than; greater than

ANSWER: A.

TOPIC: 293010
KNOWLEDGE: K1.02 [2.2/2.7]
QID: B1299 (P1896)

Brittle fracture of the reactor vessel (RV) is most likely to occur during a reactor _____ when RV temperature is _____ the nil-ductility transition temperature.

A. cooldown; above

B. heatup; above

C. cooldown; below

D. heatup; below

ANSWER: C.

TOPIC: 293010
KNOWLEDGE: K1.02 [2.2/2.7]
QID: B1500 (P697)

The nil-ductility transition temperature is the temperature above which...

A. a large compressive stress can result in brittle fracture.

B. a metal exhibits more ductile tendencies.

C. the probability of brittle fracture increases.

D. no appreciable deformation occurs prior to failure.

ANSWER: B.

TOPIC: 293010
KNOWLEDGE: K1.02 [2.2/2.7]
QID: B2099 (P2096)

Which one of the following will normally prevent brittle fracture failure of a reactor vessel?

A. Manufacturing the reactor vessel from low carbon steel.

B. Maintaining reactor vessel pressure below the maximum design limit.

C. Operating above the nil-ductility transition temperature.

D. Maintaining the number of reactor vessel heatup/cooldown cycles within limits.

ANSWER: C.

TOPIC: 293010
KNOWLEDGE: K1.02 [2.2/2.7]
QID: B2199 (P2295)

Brittle fracture of the reactor vessel (RV) is <u>least</u> likely to occur during a reactor _____ when RV temperature is _____ the nil-ductility transition temperature.

A. cooldown; above

B. heatup; above

C. cooldown; below

D. heatup; below

ANSWER: B.

TOPIC: 293010
KNOWLEDGE: K1.02 [2.2/2.7]
QID: B2299 (P996)

The nil-ductility transition temperature is that temperature...

A. below which vessel failure is imminent.

B. above which vessel failure is imminent.

C. below which the probability of brittle fracture significantly increases.

D. above which the probability of brittle fracture significantly increases.

ANSWER: C.

TOPIC: 293010
KNOWLEDGE: K1.02 [2.2/2.7]
QID: B2699 (P597)

The nil-ductility transition temperature of the reactor vessel (RV) is the temperature...

A. above which the RV metal will elastically deform as RV pressure decreases.

B. above which the RV metal loses its ability to elastically deform as RV pressure increases.

C. below which the RV metal will elastically deform as RV pressure decreases.

D. below which the RV metal loses its ability to elastically deform as RV pressure increases.

ANSWER: D.

TOPIC: 293010
KNOWLEDGE: K1.04 [2.9/3.2]
QID: B100 (P96)

The likelihood of brittle fracture failure of the reactor vessel is reduced by...

A. reducing gamma flux exposure.

B. reducing vessel temperature.

C. reducing vessel pressure.

D. increasing vessel age.

ANSWER: C.

TOPIC: 293010
KNOWLEDGE: K1.04 [2.9/3.2]
QID: B300 (P1897)

Which one of the following will apply a compressive stress to the outside wall of the reactor vessel?

A. Neutron embrittlement of the reactor vessel.

B. Increasing reactor pressure.

C. Performing a reactor cooldown.

D. Performing a reactor heatup.

ANSWER: C.

TOPIC: 293010
KNOWLEDGE: K1.04 [2.9/3.2]
QID: B398 (P397)

The conditions for brittle fracture of the reactor vessel are most closely approached at…

A. 400°F, 10 psig.

B. 400°F, 400 psig.

C. 120°F, 10 psig.

D. 120°F, 400 psig.

ANSWER: D.

TOPIC: 293010
KNOWLEDGE: K1.04 [2.9/3.2]
QID: B399 (P399)

The total stress on the reactor vessel inner wall is greater during cooldown than heatup because...

A. thermal stress during heatup totally offsets pressure stress at the inner wall.

B. both pressure stress and thermal stress are tensile at the inner wall during cooldown.

C. the tensile thermal stress at the inner wall is greater in magnitude than the compressive pressure stress at the same location during cooldown.

D. thermal stress during both cooldown and heatup is tensile at the inner wall, but the thermal stress during cooldown is greater in magnitude.

ANSWER: B.

TOPIC: 293010
KNOWLEDGE: K1.05 [2.5/2.8]
QID: B400 (P398)

The likelihood of reactor vessel brittle fracture is decreased by minimizing...

A. the oxygen content in the reactor coolant.

B. operation at high reactor coolant temperatures.

C. the time taken to cool down the reactor.

D. the amount of copper contained in the metal used for the reactor vessel.

ANSWER: D.

TOPIC: 293010
KNOWLEDGE: K1.04 [2.9/3.2]
QID: B899 (P97)

The pressure stress on a reactor vessel wall is...

A. tensile across the entire wall.

B. compressive across the entire wall.

C. tensile on the inner wall, compressive on the outer wall.

D. compressive on the inner wall, tensile on the outer wall.

ANSWER: A.

TOPIC: 293010
KNOWLEDGE: K1.04 [2.9/3.2]
QID: B1899 (P1597)

Which one of the following comparisons increases the probability for brittle fracture of a reactor vessel wall?

A. Using a vessel fabricated from stainless steel rather than carbon steel.

B. Subjecting the vessel wall to a compressive stress rather than a tensile stress.

C. A high reactor coolant temperature rather than a low reactor coolant temperature.

D. Performing a 100°F/hr cooldown of the reactor rather than a 100°F/hr heatup.

ANSWER: D.

TOPIC: 293010
KNOWLEDGE: K1.04 [2.9/3.2]
QID: B2300

A reactor plant heatup is in progress. The thermal stress applied to the reactor vessel wall is...

A. tensile across the entire wall.

B. tensile at the inner wall and compressive at the outer wall.

C. compressive across the entire wall.

D. compressive at the inner wall and tensile at the outer wall.

ANSWER: D.

TOPIC: 293010
KNOWLEDGE: K1.04 [2.9/3.2]
QID: B2399 (P2397)

Reactor pressure-temperature limit curves are derived by using a conservative value for the reactor vessel nil-ductility transition temperature (NDTT).

Early in core life, the conservative value of NDTT is _____ than actual NDTT; the actual NDTT is verified periodically over core life by _____.

A. higher; removing and testing irradiated specimens of reactor vessel material

B. higher; in-service inspection and analysis of the reactor vessel wall

C. lower; removing and testing irradiated specimens of reactor vessel material

D. lower; in-service inspection and analysis of the reactor vessel wall

ANSWER: A.

TOPIC: 293010
KNOWLEDGE: K1.04 [2.9/3.2]
QID: B2500 (P2497)

Which one of the following comparisons will result in a higher probability for brittle fracture of a reactor vessel?

A. A feedwater pH of 8.5 rather than 9.0

B. A high oxygen content in the feedwater rather than a low oxygen content.

C. A 50°F/hr reactor cooldown rather than a 100°F/hr heatup.

D. A high gamma flux in the reactor rather than a high neutron flux.

ANSWER: C.

TOPIC: 293010
KNOWLEDGE: K1.04 [2.9/3.2]
QID: B2700 (P1696)

Which one of the following comparisons increases the probability of brittle fracture for a reactor vessel wall?

A. Performing a 50°F/hr cooldown at 1,600 psia rather than a 50°F/hr cooldown at 1,200 psia.

B. A compressive stress across the vessel wall rather than a tensile stress.

C. A high reactor coolant temperature rather than a low reactor coolant temperature.

D. Changing the reactor vessel manufacturing process to increase toughness while maintaining the same yield strength.

ANSWER: A.

TOPIC: 293010
KNOWLEDGE: K1.04 [2.9/3.2]
QID: B2999

Which one of the following operating limitations is designed to prevent brittle fracture of the reactor vessel?

A. Maximum setpoint for the main steam safety valves.

B. Maximum chloride concentration in the reactor coolant.

C. Maximum reactor pressure versus vessel temperature during heatup.

D. Maximum differential temperature between the vessel steam dome and the bottom head.

ANSWER: C.

TOPIC: 293010
KNOWLEDGE: K1.04 [2.9/3.2]
QID: B3700 (P3698)

A reactor is shutdown with the shutdown cooling system maintaining reactor coolant temperature at 240°F immediately following an uncontrolled rapid cooldown from 500°F. If reactor coolant temperature is held constant at 240°F, which one of the following describes the change in tensile stress on the inner wall of the reactor vessel (RV) over the next few hours?

A. Decreases, because the temperature gradient across the RV wall will decrease.

B. Increases, because the temperature gradient across the RV wall will decrease.

C. Decreases, because the inner RV wall temperature will approach the nil-ductility transition temperature.

D. Increases, because the inner RV wall temperature will approach the nil-ductility transition temperature.

ANSWER: A.

TOPIC: 293010
KNOWLEDGE: K1.05 [2.5/2.8]
QID: B299 (P1997)

Which one of the following describes the effect of fast neutron irradiation on a reactor vessel?

A. Increased fatigue crack growth rate

B. Increased plastic deformation prior to failure

C. Increased ductility

D. Increased nil-ductility transition temperature

ANSWER: D.

TOPIC: 293010
KNOWLEDGE: K1.05 [2.5/2.8]
QID: B500 (P499)

Which one of the following types of radiation most significantly reduces the ductility of a reactor vessel?

A. Beta

B. Thermal neutrons

C. Gamma

D. Fast neutrons

ANSWER: D.

TOPIC: 293010
KNOWLEDGE: K1.05 [2.5/2.8]
QID: B599 (P298)

Prolonged exposure of a reactor vessel to a fast neutron flux will cause the nil-ductility transition temperature to...

A. decrease, due to the propagation of existing flaws.

B. increase, due to the propagation of existing flaws.

C. decrease, due to changes in the material properties of the vessel wall.

D. increase, due to changes in the material properties of the vessel wall.

ANSWER: D.

TOPIC: 293010
KNOWLEDGE: K1.05 [2.5/2.8]
QID: B1100 (P1100)

Two identical reactors have been in operation for the last 10 years. Reactor A has experienced 40 heatup/cooldown cycles with an average capacity factor of 50 percent. Reactor B has experienced 30 heatup/cooldown cycles with an average capacity factor of 60 percent.

Which reactor will have the lower reactor vessel nil-ductility transition temperature, and why?

A. Reactor A, due to the lower average capacity factor.

B. Reactor A, due to the greater number of heatup/cooldown cycles.

C. Reactor B, due to the higher average capacity factor.

D. Reactor B, due to the fewer number of heatup/cooldown cycles.

ANSWER: A.

TOPIC: 293010
KNOWLEDGE: K1.05 [2.5/2.8]
QID: B1200 (P1898)

Which one of the following is the major contributor to embrittlement of a reactor vessel?

A. High-energy fission fragments

B. High operating temperature

C. High-energy gamma radiation

D. High-energy neutron radiation

ANSWER: D.

TOPIC: 293010
KNOWLEDGE: K1.05 [2.5/2.8]
QID: B1800 (P1699)

Two identical reactors have been in operation for the last 10 years. Reactor A has experienced 30 heatup/cooldown cycles with an average capacity factor of 60 percent. Reactor B has experienced 40 heatup/cooldown cycles with an average capacity factor of 50 percent.

Which reactor will have the lower reactor vessel nil-ductility transition temperature, and why?

A. Reactor A, due to the higher average capacity factor.

B. Reactor A, due to the fewer number of heatup/cooldown cycles.

C. Reactor B, due to the lower average capacity factor.

D. Reactor B, due to the greater number of heatup/cooldown cycles.

ANSWER: C.

TOPIC: 293010
KNOWLEDGE: K1.05 [2.5/2.8]
QID: B1900 (P899)

After several years of operation, the maximum allowable stress to the reactor vessel is more limited by the inner wall than the outer wall because...

A. the inner wall has a smaller surface area than the outer wall.

B. the inner wall experiences more tensile stress than the outer wall.

C. the inner wall operates at a higher temperature than the outer wall.

D. the inner wall experiences more neutron-induced embrittlement than the outer wall.

ANSWER: D.

TOPIC: 293010
KNOWLEDGE: K1.05 [2.5/2.8]
QID: B1999 (P998)

Prolonged exposure to _____ will cause the nil-ductility transition temperature of the reactor vessel to _____.

A. neutron radiation; increase

B. neutron radiation; decrease

C. normal operating pressure; increase

D. normal operating pressure; decrease

ANSWER: A.

TOPIC: 293010
KNOWLEDGE: K1.05 [2.5/2.8]
QID: B2100 (P2098)

Two identical reactors have been in operation for the last 10 years. Reactor A has experienced 30 heatup/cooldown cycles and has an average capacity factor of 60 percent. Reactor B has experienced 40 heatup/cooldown cycles and has an average capacity factor of 50 percent.

Which reactor will have the <u>higher</u> reactor vessel nil-ductility transition temperature, and why?

A. Reactor A, due to the fewer number of heatup/cooldown cycles.

B. Reactor A, due to the higher average capacity factor.

C. Reactor B, due to the greater number of heatup/cooldown cycles.

D. Reactor B, due to the lower average capacity factor.

ANSWER: B.

TOPIC: 293010
KNOWLEDGE: K1.05 [2.5/2.8]
QID: B2600 (P2599)

Two identical reactors are currently shut down for refueling. Reactor A has an average lifetime capacity factor of 60 percent and has been operating for 15 years. Reactor B has an average lifetime capacity factor of 75 percent and has been operating for 12 years.

Which reactor, if any, will have the lower reactor vessel nil-ductility transition temperature, and why?

A. Reactor A, due to the lower average lifetime capacity factor.

B. Reactor B, due to the higher average lifetime capacity factor.

C. Both reactors will have approximately the same nil-ductility transition temperature because each reactor has produced approximately the same number of fissions.

D. Both reactors will have approximately the same nil-ductility transition temperature because fast neutron irradiation in a shutdown reactor is not significant.

ANSWER: C.

TOPIC: 293010
KNOWLEDGE: K1.05 [2.5/2.8]
QID: B2800 (P2799)

Two identical reactors have been in operation for the last 10 years. Reactor A has experienced 30 heatup/cooldown cycles and has an average capacity factor of 60 percent. Reactor B has experienced 20 heatup/cooldown cycles and has an average capacity factor of 80 percent.

Which reactor will have the higher reactor vessel nil-ductility transition temperature, and why?

A. Reactor A, due to the lower average capacity factor.

B. Reactor A, due to the greater number of heatup/cooldown cycles.

C. Reactor B, due to the higher average capacity factor.

D. Reactor B, due to the fewer number of heatup/cooldown cycles.

ANSWER: C.

TOPIC: 293010
KNOWLEDGE: K1.05 [2.5/2.8]
QID: B2900 (P2298)

Two identical reactors have been in operation for the last 10 years. Reactor A has experienced 40 heatup/cooldown cycles and has an average capacity factor of 50 percent. Reactor B has experienced 30 heatup/cooldown cycles and has an average capacity factor of 60 percent.

Which reactor will have the higher reactor vessel nil-ductility transition temperature, and why?

A. Reactor A, due to the greater number of heatup/cooldown cycles.

B. Reactor A, due to the lower average capacity factor.

C. Reactor B, due to the fewer number of heatup/cooldown cycles.

D. Reactor B, due to the higher average capacity factor.

ANSWER: D.

TOPIC: 293010
KNOWLEDGE: K1.05 [2.5/2.8]
QID: B3000 (P2698)

Two identical reactors are currently shut down for refueling. Reactor A has achieved an average lifetime capacity factor of 60 percent while operating for 15 years. Reactor B has achieved an average lifetime capacity factor of 60 percent while operating for 12 years.

Which reactor, if any, will have the lower reactor vessel nil-ductility transition temperature, and why?

A. Reactor A, because it has produced more total fissions.

B. Reactor B, because it has produced less total fissions.

C. Both reactors will have approximately the same nil-ductility transition temperature because they have equal average lifetime power capacities.

D. Both reactors will have approximately the same nil-ductility transition temperature because the fission rate in a shutdown reactor is not significant.

ANSWER: B.

TOPIC: 293010
KNOWLEDGE: K1.05 [2.5/2.8]
QID: B3200 (P3197)

A reactor is shut down for refueling following 18 months of operation at an average power level of 85 percent. During the shutdown, a reactor vessel metal specimen was removed from the reactor vessel for testing. The testing determined that the nil-ductility transition (NDT) temperature of the specimen decreased from 44°F to 42°F since the previous refueling shutdown.

Which one of the following conclusions is warranted?

A. The test results are credible and the reactor vessel is <u>more</u> likely to experience brittle fracture now than after the previous refueling shutdown.

B. The test results are credible and the reactor vessel is <u>less</u> likely to experience brittle fracture now than after the previous refueling shutdown.

C. The test results are questionable because the specimen NDT temperature would <u>not</u> decrease during the described 18-month period of operation.

D. The test results are questionable because the specimen NDT temperature would decrease by <u>more</u> than 2°F during the described 18-month period of operation.

ANSWER: C.

TOPIC: 293010
KNOWLEDGE: K1.05 [2.5/2.8]
QID: B3300 (P3297)

A reactor is shut down for refueling following 18 months of operation at an average power level of 85 percent. During the shutdown, a reactor vessel metal specimen was removed from the reactor vessel for testing. The testing determined that the nil-ductility transition (NDT) temperature of the specimen increased from 42°F to 44°F since the previous refueling shutdown.

Which one of the following conclusions is warranted?

A. The test results are credible and the reactor vessel is <u>more</u> susceptible to brittle fracture now than after the previous refueling shutdown.

B. The test results are credible and the reactor vessel is <u>less</u> susceptible to brittle fracture now than after the previous refueling shutdown.

C. The test results are questionable because the vessel NDT temperature would <u>not</u> increase during the described 18-month period of operation.

D. The test results are questionable because the vessel NDT temperature would increase by <u>at least</u> 10°F during the described 18-month period of operation.

ANSWER: A.

TOPIC: 293010
KNOWLEDGE: K1.05 [2.5/2.8]
QID: B3600 (P3598)

A reactor is shut down for refueling following 18 months of operation at an average power level of 85 percent. During the shutdown, a reactor vessel metal specimen is removed from the reactor vessel for testing. The testing indicates that the nil-ductility transition (NDT) temperature of the specimen has decreased from 44°F to 32°F since the previous refueling shutdown.

Which one of the following conclusions is warranted?

A. The test results are credible and the reactor vessel is <u>more</u> likely to experience brittle fracture now than after the previous refueling shutdown.

B. The test results are credible and the reactor vessel is <u>less</u> likely to experience brittle fracture now than after the previous refueling shutdown.

C. The test results are questionable because the actual specimen NDT temperature would <u>not</u> decrease during the described 18-month period of operation.

D. The test results are questionable because the actual specimen NDT temperature would decrease by much <u>less</u> than indicated by the test results.

ANSWER: C.

TOPIC: 293010
KNOWLEDGE: K1.05 [2.5/2.8]
QID: B3900 (P3898)

Two identical reactors are currently shut down for refueling. Reactor A has an average lifetime capacity factor of 90 percent and has been operating for 10 years. Reactor B has an average lifetime capacity factor of 80 percent and has been operating for 15 years.

Which reactor will have the higher reactor vessel nil-ductility transition temperature, and why?

A. Reactor A, because it has the higher average lifetime capacity factor.

B. Reactor B, because it has the lower average lifetime capacity factor.

C. Reactor A, because it has produced significantly less fissions.

D. Reactor B, because it has produced significantly more fissions.

ANSWER: D.

TOPIC: 293010
KNOWLEDGE: K1.05 [2.5/2.8]
QID: B4250 (P4250)

A reactor is shut down for refueling following 18 months of operation at an average power level of 85 percent. During the shutdown, a reactor vessel metal specimen was removed from the reactor vessel for testing. The tests determined that the nil-ductility transition (NDT) temperature of the specimen increased from 42°F to 72°F since the previous refueling shutdown.

Which one of the following conclusions is warranted?

A. The test results are credible and the reactor vessel is more likely to experience brittle fracture now than after the previous refueling shutdown.

B. The test results are credible and the reactor vessel is less likely to experience brittle fracture now than after the previous refueling shutdown.

C. The test results are questionable because the specimen NDT temperature would not increase during the described 18-month period of operation.

D. The test results are questionable because the specimen NDT temperature would increase by less than indicated during the described 18-month period of operation.

ANSWER: D.

TOPIC: 293010
KNOWLEDGE: K1.05 [2.5/2.8]
QID: B4450 (P4450)

A reactor is shut down for refueling. During the shutdown, a reactor vessel metal specimen was removed from the reactor vessel for testing. The specimen was last tested six years ago and then returned to its original location in the reactor vessel. During the subsequent six years, the reactor has completed several 18 month fuel cycles with an average power level of 85 percent.

The tests determined that the nil-ductility transition (NDT) temperature of the specimen has remained unchanged at 44°F since it was last tested. Which one of the following conclusions is warranted?

A. The test results are credible, however, the reactor vessel is more susceptible to brittle fracture now than six years ago.

B. The test results are credible, however, the reactor vessel is less susceptible to brittle fracture now than six years ago.

C. The test results are questionable because the specimen NDT temperature should have increased since it was last tested.

D. The test results are questionable because the specimen NDT temperature should have decreased since it was last tested.

ANSWER: C.

TOPIC: 293010
KNOWLEDGE: K1.05 [2.5/2.8]
QID: B4650 (P4650)

Two identical reactors are currently shut down for refueling. Reactor A has achieved an average lifetime capacity factor of 60 percent while operating for 12 years. Reactor B has achieved an average lifetime capacity factor of 60 percent while operating for 15 years.

Which reactor, if any, will have the lower reactor vessel nil-ductility transition temperature?

A. Reactor A, because it has produced less total fissions.

B. Reactor B, because it has produced more total fissions.

C. Both reactors will have approximately the same nil-ductility transition temperature because they have equal average lifetime power capacities.

D. Both reactors will have approximately the same nil-ductility transition temperature because the fission rate in a shutdown reactor is not significant.

ANSWER: A.

TOPIC: 293010
KNOWLEDGE: K1.05 [2.5/2.8]
QID: B5550 (P5550)

Two identical reactors are currently shut down for refueling. Reactor A has an average lifetime capacity factor of 90 percent and has been operating for 24 years. Reactor B has an average lifetime capacity factor of 72 percent and has been operating for 30 years.

Which reactor, if any, will have the lower reactor vessel nil-ductility transition temperature?

A. Reactor A, because it has produced more total fissions.

B. Reactor B, because it has produced less total fissions.

C. Both reactors will have approximately the same nil-ductility transition temperature because fast neutron irradiation in a shutdown reactor is not significant.

D. Both reactors will have approximately the same nil-ductility transition temperature because each reactor has produced approximately the same number of fissions.

ANSWER: D.

TOPIC: 293010
KNOWLEDGE: K1.05 [2.5/2.8]
QID: B6350 (P6350)

Which one of the following comparisons yields a higher probability for brittle fracture of a reactor vessel?

A. A high fast neutron flux in the reactor rather than a high gamma flux.

B. A high material ductility of the reactor vessel rather than a high material strength.

C. A rapid 100°F reactor heatup at a high temperature rather than at a low temperature.

D. A rapid 100°F reactor cooldown at a high temperature rather than at a low temperature.

ANSWER: A.

TOPIC: 293010
KNOWLEDGE: K1.05 [2.5/2.8]
QID: B6950 (P6950)

Two identical reactors are currently shut down for refueling. Reactor A has an average lifetime capacity factor of 90 percent and has been operating for 16 years. Reactor B has an average lifetime capacity factor of 80 percent and has been operating for 18 years.

Which reactor, if any, will have the lower reactor vessel nil-ductility transition temperature, and why?

A. Reactor A, due to the higher average lifetime capacity factor.

B. Reactor B, due to the lower average lifetime capacity factor.

C. Both reactors will have approximately the same nil-ductility transition temperature because each reactor has produced approximately the same number of fissions.

D. Both reactors will have approximately the same nil-ductility transition temperature because fast neutron irradiation in a shutdown reactor is not significant.

ANSWER: C.

TOPIC: 293010
KNOWLEDGE: K1.05 [2.5/2.8]
QID: B7640 (P7640)

Which one of the following comparisons yields a lower probability for brittle fracture of a reactor vessel?

A. A high gamma flux in the reactor rather than a high fast neutron flux.

B. A high material strength of the reactor vessel rather than a high material ductility.

C. A rapid 100°F reactor heatup at a low temperature rather than at a high temperature.

D. A rapid 100°F reactor cooldown at a low temperature rather than at a high temperature.

ANSWER: A.