TOPIC: 291001
KNOWLEDGE: K1.01 [3.4/3.5]
QID: B1

Which one of the following describes the operation of a safety valve installed on a high pressure steam system?

A. A safety valve is initially lifted off its seat by system pressure, then is forced fully open by an air-operated piston.

B. As system pressure increases to the safety valve setpoint, the pressure overcomes spring force on the valve operator, causing the valve to open.

C. A safety valve will remain open until system pressure has been reduced to the pilot valve actuation setpoint.

D. When the open safety valve has returned system pressure to the lifting set point, a combination of air and steam pressure above the valve disk closes the valve.

ANSWER: B.

TOPIC: 291001
KNOWLEDGE: K1.01 [3.4/3.5]
QID: B901

Which one of the following valves provides overpressure protection to limit the internal pressure in vessels, and thus protect personnel and equipment?

A. Safety

B. Control

C. Sentinel

D. Pressure regulating

ANSWER: A.

TOPIC: 291001
KNOWLEDGE: K1.01 [3.4/3.5]
QID: B1101

Which one of the following statements describes the operation of a reactor pressure vessel safety valve?

A. An open safety valve will close when reactor pressure decreases enough for gravity and spring tension to overcome the effect of reactor pressure on the main valve disk.

B. An open safety valve will close when the pilot valve senses a reduced reactor pressure and isolates reactor pressure to the main valve disk.

C. When reactor pressure reaches the lift set point, the safety valve begins to open and will modulate to a position that is directly proportional to reactor pressure.

D. When reactor pressure reaches the lift set point, a pilot valve closes to create a differential pressure across the main valve disk, which overcomes gravity and spring tension to open the valve.

ANSWER: A.

TOPIC: 291001
KNOWLEDGE: K1.01 [3.4/3.5]
QID: B1701 (P1802)

A vertical safety valve has a compressed spring assembly that is applying 1,200 lbf to the top of the valve disk in opposition to system pressure. System pressure is being exerted on the underside of the valve disk that is 3 inches in diameter.

Which one of the following is the approximate system pressure at which the safety valve will open?

A. 44 psig

B. 64 psig

C. 128 psig

D. 170 psig

ANSWER: D.

TOPIC: 291001
KNOWLEDGE: K1.01 [3.4/3.5]
QID: B2003 (P1903)

A vertical safety valve with a 3-inch diameter disk has a spring applying 1,000 lbf to the top of the valve disk in opposition to system pressure. Which one of the following is the approximate system pressure at which the safety valve will begin to open?

A. 35 psig

B. 111 psig

C. 141 psig

D. 444 psig

ANSWER: C.

TOPIC: 291001
KNOWLEDGE: K1.01 [3.4/3.5]
QID: B2103 (P2101)

Refer to the drawing of a typical safety valve (see figure below).

The component indicated by the solid arrow is used when necessary to manually...

A. ratchet open the safety valve.

B. pop open the safety valve.

C. gag shut the safety valve.

D. determine the position of the safety valve.

ANSWER: B.

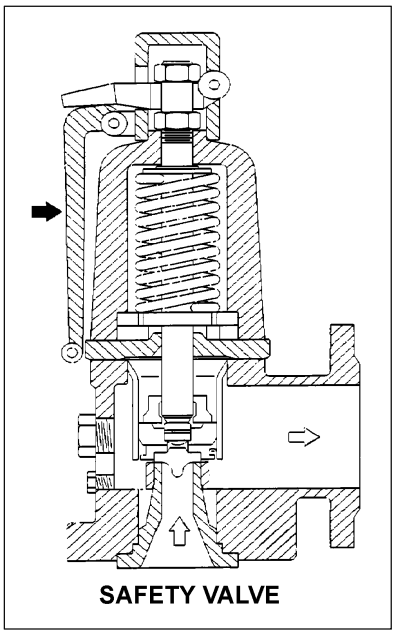

TOPIC: 291001
KNOWLEDGE: K1.01 [3.4/3.5]
QID: B2301 (P2301)

A vertical safety valve has a compressed spring assembly that is applying 2,500 lbf to the top of the valve disk in opposition to system pressure. System pressure is being exerted on the underside of the valve disk that is 5 inches in diameter.

Which one of the following is the approximate system pressure at which the safety valve will open?

A. 32 psig

B. 127 psig

C. 159 psig

D. 500 psig

ANSWER: B.

TOPIC: 291001
KNOWLEDGE: K1.01 [3.4/3.5]
QID: B2803 (P2801)

A vertical safety valve with a 2-inch diameter disk has a compressed spring applying 2,400 lbf to the top of the valve disk in opposition to system pressure. Which one of the following is the approximate system pressure at which the safety valve will open?

A. 95 psig

B. 191 psig

C. 382 psig

D. 764 psig

ANSWER: D.

TOPIC: 291001
KNOWLEDGE: K1.01 [3.4/3.5]
QID: B3401 (P3401)

Given the following pressure specifications for operation of a main steam safety valve (MSSV):

Setpoint pressure (MSSV starts to open) = 1,200 psia
Maximum pressure (MSSV will be fully open) = 1,230 psia
Reseat pressure (MSSV will be fully closed) = 1,140 psia

Which one of the following is the percent blowdown for the MSSV?

A. 2.5 percent

B. 5.0 percent

C. 7.5 percent

D. 10.0 percent

ANSWER: B.

TOPIC: 291001
KNOWLEDGE: K1.01 [3.4/3.5]
K1.02 [3.4/3.6]
QID: B4201 (P4201)

A completely full water storage tank is being hydrostatically tested to 100 psig using a positive displacement pump (PDP) with a smooth and constant discharge flow rate of 10 gpm. The tank is protected by a safety valve <u>and</u> a relief valve; both valves discharge to the atmosphere. Each valve has an opening setpoint of 105 psig and a maximum rated discharge flow rate of 6 gpm. The PDP is inadvertently left running when tank pressure reaches 100 psig.

With the PDP still running, tank pressure will stabilize _____ 105 psig; and the greater mass flow rate will be coming from the _____ valve.

A. at; safety

B. above; safety

C. at; relief

D. above; relief

ANSWER: B.

TOPIC: 291001
KNOWLEDGE: K1.01 [3.4/3.5]
QID: B4401 (P4401)

Given the following pressure specifications for a safety relief valve (SRV):

Setpoint pressure (SRV will start to open) = 1,200 psia
Maximum pressure (SRV will be fully open) = 1,242 psia
Reseat pressure (SRV will be fully closed) = 1,152 psia

Which one of the following is the percent accumulation for the SRV?

A. 2.5 percent

B. 3.0 percent

C. 3.5 percent

D. 4.0 percent

ANSWER: C.

TOPIC: 291001
KNOWLEDGE: K1.01 [3.4/3.5]
K1.02 [3.4/3.6]
QID: B4701 (P4701)

A completely full water storage tank is being hydrostatically tested to 200 psig using a positive displacement pump (PDP) with a smooth and constant discharge flow rate of 8 gpm. The tank is protected by a relief valve <u>and</u> a safety valve; both valves discharge to the atmosphere. Each valve has an opening setpoint of 205 psig and a maximum rated discharge flow rate of 6 gpm. The PDP is inadvertently left running when tank pressure reaches 200 psig.

When conditions stabilize with the PDP still running, the relief valve will be _____ open; and the safety valve will be discharging a flow rate of approximately _____ to the atmosphere.

A. partially; 6 gpm

B. partially; 2 gpm

C. fully; 6 gpm

D. fully; 2 gpm

ANSWER: A.

TOPIC: 291001
KNOWLEDGE: K1.01 [3.4/3.5]
K1.02 [3.4/3.6]
QID: B5201 (P5201)

Refer to the drawing of two identical water storage tanks (see figure below). Tank A is protected by a relief valve and Tank B is protected by a safety valve. Each valve has an opening setpoint of 205 psig and a maximum rated discharge flow rate of 8 gpm.

The tanks are being hydrostatically tested to 200 psig. Each tank is being supplied with a smooth and constant flow rate of 2 gpm from separate positive displacement pumps (PDPs). Both PDPs are inadvertently left running when tank pressures reach 200 psig.

With the PDPs running continuously, what will be the resulting status of the relief and safety valves?

	Relief Valve Status	Safety Valve Status
A.	Partially open	Partially open
B.	Partially open	Cycling between fully open and fully closed
C.	Cycling between fully open and fully closed	Partially open
D.	Cycling between fully open and fully closed	Cycling between fully open and fully closed

ANSWER: B.

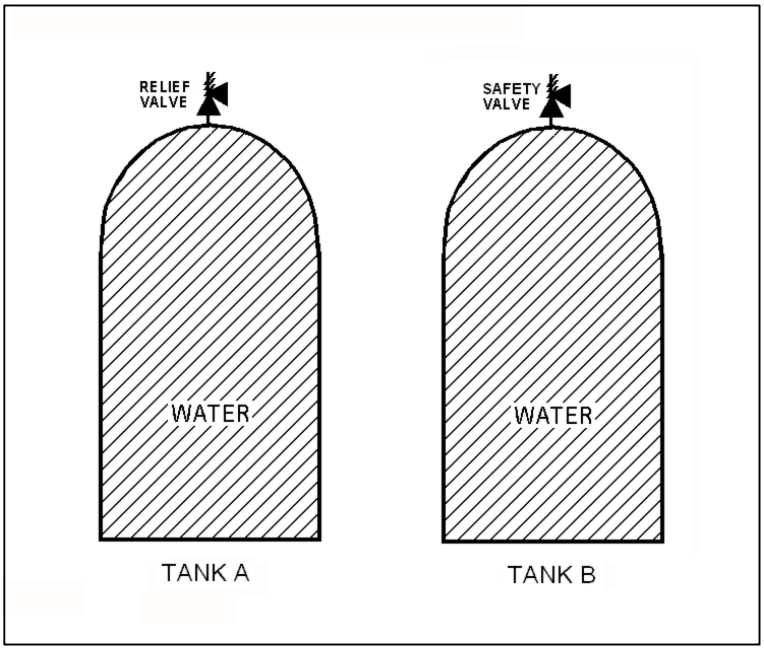

TOPIC: 291001
KNOWLEDGE: K1.01 [3.4/3.5]
K1.02 [3.4/3.6]
QID: B6101 (P6101)

A completely full water storage tank is being hydrostatically tested to 200 psig using a positive displacement pump (PDP) with a smooth and constant discharge flow rate of 8 gpm. The tank is protected by a relief valve and a safety valve that both discharge to the atmosphere. The valves have the following characteristics:

- The relief valve opening setpoint is 200 psig with an accumulation of 5 percent.
- The safety valve opening setpoint is 240 psig with a blowdown of 5 percent.
- Both valves have a maximum discharge flow rate of 6 gpm.

The PDP is inadvertently left running when tank pressure reaches 200 psig.

When conditions stabilize with the PDP still running, the relief valve will be _____ open; and the safety valve will be discharging a flow rate of approximately _____ to the atmosphere.

A. partially; 6 gpm

B. partially; 2 gpm

C. fully; 6 gpm

D. fully; 2 gpm

ANSWER: D.

TOPIC: 291001
KNOWLEDGE: K1.01 [3.4/3.5]
K1.02 [3.4/3.6]
QID: B6201 (P6201)

A main steam system uses a combination of safety and relief valves for overpressure protection. Which one of the following describes a major design consideration for installing both types of valves in the same system?

A. The safety valves are installed to prevent chattering of the relief valves during normal power operation.

B. The safety valves are installed to prevent unnecessary opening of the relief valves during a steam pressure transient.

C. The relief valves are installed to prevent chattering of the safety valves during normal power operation.

D. The relief valves are installed to prevent unnecessary opening of the safety valves during a steam pressure transient.

ANSWER: D.

TOPIC: 291001
KNOWLEDGE: K1.01 [3.4/3.5]
K1.02 [3.4/3.6]
QID: B7671 (P7671)

A completely full water storage tank is being hydrostatically tested to 200 psig using a positive displacement pump (PDP) with a smooth and constant discharge flow rate of 8 gpm. The tank is protected by a relief valve and a safety valve that both discharge to the atmosphere. The valves have the following characteristics:

- The relief valve opening setpoint is 220 psig with an accumulation of 5 percent.
- The safety valve opening setpoint is 260 psig with a blowdown of 5 percent.
- Both valves have a maximum discharge flow rate of 6 gpm.

The PDP is inadvertently left running when tank pressure reaches 200 psig.

After a few minutes with the PDP still running, the relief valve will be discharging a flow rate of approximately _____; and the safety valve will be _____.

A. 2 gpm; partially open

B. 6 gpm; partially open

C. 2 gpm; cycling between fully open and fully closed

D. 6 gpm; cycling between fully open and fully closed

ANSWER: D.

TOPIC: 291001
KNOWLEDGE: K1.02 [3.4/3.6]
QID: B2 (P3302)

Refer to the drawing of two identical pressure vessels with identical relief valve protection (see figure below).

Vessel A is completely filled with subcooled water at 80°F and vessel B is in a saturated, two-phase condition. Both vessels are currently pressurized to 50 psig and isolated.

If both relief valves fully open simultaneously, the faster pressure reduction will initially occur in vessel _____; and the faster mass loss will initially occur in vessel_____.

A. A; A

B. A; B

C. B; A

D. B; B

ANSWER: A.

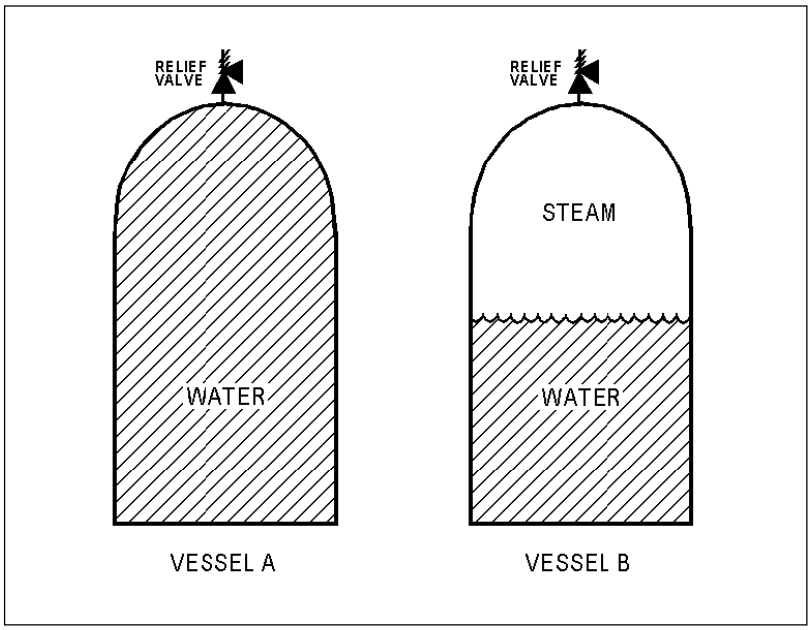

TOPIC: 291001
KNOWLEDGE: K1.02 [3.4/3.5]
QID: B201 (P501)

The difference between the setpoint pressure at which a relief valve begins to open and the pressure at which it is fully open is called...

A. setpoint deviation.

B. setpoint tolerance.

C. accumulation.

D. blowdown.

ANSWER: C.

TOPIC: 291001
KNOWLEDGE: K1.02 [3.4/3.6]
QID: B301 (P202)

The difference between the setpoint pressure at which a safety valve opens and the pressure at which it closes is called...

A. blowdown.

B. accumulation.

C. setpoint tolerance.

D. setpoint deviation.

ANSWER: A.

TOPIC: 291001
KNOWLEDGE: K1.02 [3.4/3.6]
QID: B1301 (P1801)

Refer to the drawing of two identical pressure vessels with identical relief valve protection (see figure below).

Both vessels have been pressurized to 50 psig and then isolated. Vessel A is completely filled with water at 150°F. Vessel B is in a saturated condition with one-half steam (100 percent quality) and one-half water (0 percent quality) by volume.

If both relief valves fully open simultaneously, the faster pressure reduction will occur in vessel _____; and if both relief valves close at 40 psig, the greater mass loss will have occurred in vessel _____.

A. A; A

B. A; B

C. B; A

D. B; B

ANSWER: B.

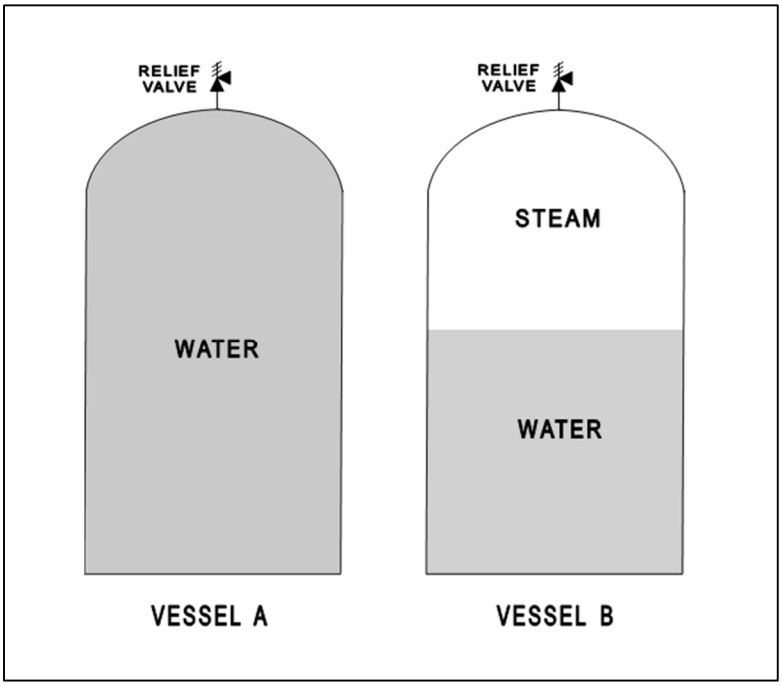

TOPIC: 291001
KNOWLEDGE: K1.02 [3.4/3.6]
QID: B1801 (P1504)

Which one of the following is a difference between a typical relief valve and a typical safety valve?

A. The actuator closing spring on a relief valve is in a compressed state whereas the actuator closing spring on a safety valve acts in tension.

B. A relief valve gradually opens as pressure increases above the setpoint pressure whereas a safety valve pops open at the setpoint pressure.

C. Relief valves are capable of being gagged whereas safety valves are <u>not</u>.

D. The blowdown of a relief valve is greater than the blowdown of a safety valve.

ANSWER: B.

TOPIC: 291001
KNOWLEDGE: K1.02 [3.4/3.6]
QID: B2501 (P2501)

Water storage tanks A and B are identical except that tank A receives overpressure protection from a relief valve, whereas tank B uses a safety valve. The relief valve and safety valve have the same pressure setpoints and design flow rates.

Water is continuously added to each tank at the same rate (50 percent of the design flow rate of the relief and safety valves). After the tanks are completely full, tank A pressure will _____; and tank B pressure will _____.

A. fluctuate within a few percent of the pressure setpoint; stabilize slightly above the pressure setpoint

B. fluctuate within a few percent of the pressure setpoint; fluctuate within a few percent of the pressure setpoint

C. stabilize slightly above the pressure setpoint; stabilize slightly above the pressure setpoint

D. stabilize slightly above the pressure setpoint; fluctuate within a few percent of the pressure setpoint

ANSWER: D.

TOPIC: 291001
KNOWLEDGE: K1.02 [3.4/3.6]
QID: B2701 (P2701)

Vessels A and B are identical except that vessel A receives overpressure protection from an installed safety valve. Vessel B has an installed relief valve. The safety and relief valves have the same pressure setpoint and design flow rate.

Water is continuously added to each vessel at the same rate (50 percent of the design flow rate of the safety and relief valves). After vessel pressure reaches the setpoint for each valve, vessel A pressure will _____; and vessel B pressure will _____.

A. stabilize slightly above the pressure setpoint; stabilize slightly above the pressure setpoint

B. stabilize slightly above the pressure setpoint; fluctuate within a few percent of the pressure setpoint

C. fluctuate within a few percent of the pressure setpoint; stabilize slightly above the pressure setpoint

D. fluctuate within a few percent of the pressure setpoint; fluctuate within a few percent of the pressure setpoint

ANSWER: C.

TOPIC: 291001
KNOWLEDGE: K1.02 [3.4/3.6]
QID: B6402 (P6401)

A completely full water storage tank is being hydrostatically tested to 200 psig using a positive displacement pump (PDP) with a smooth and constant discharge flow rate of 6 gpm. The tank is protected by two relief valves that discharge to the atmosphere. The relief valves have the following characteristics:

- Relief valve A opening setpoint is 200 psig with an accumulation of 1.5 percent.
- Relief valve B opening setpoint is 200 psig with an accumulation of 3.0 percent.
- Each valve has linear flow rate characteristics and a maximum discharge flow rate of 6 gpm.

The PDP is inadvertently left running when tank pressure reaches 200 psig.

With the PDP running continuously, what will be the discharge flow rates of the relief valves when tank pressure stabilizes?

	Relief Valve A	Relief Valve B
A.	1 gpm	5 gpm
B.	2 gpm	4 gpm
C.	3 gpm	3 gpm
D.	4 gpm	2 gpm

ANSWER: D.

TOPIC: 291001
KNOWLEDGE: K1.02 [3.4/3.6]
QID: B6701 (P6701)

A completely full water tank is being hydrostatically tested to 180 psig using a positive displacement pump (PDP) with a smooth and constant discharge flow rate of 6 gpm. The tank is protected by two relief valves that discharge to the atmosphere. The relief valves have the following characteristics:

- Relief valve A opening setpoint is 180 psig with an accumulation of 5 percent.
- Relief valve B opening setpoint is 200 psig with an accumulation of 5 percent.
- Each relief valve has linear flow rate characteristics and a maximum flow rate of 4 gpm.

The PDP is inadvertently left running when tank pressure reaches 180 psig.

With the PDP still running, at what pressure will the tank stabilize?

A. 190 psig

B. 195 psig

C. 205 psig

D. 210 psig

ANSWER: C.

TOPIC: 291001
KNOWLEDGE: K1.02 [3.4/3.6]
QID: B7611 (P7611)

A completely full water storage tank is being hydrostatically tested to 200 psig using a positive displacement pump (PDP) with a smooth and constant discharge flow rate of 4 gpm. The tank is protected by a relief valve that discharges to the atmosphere. The relief valve has the following characteristics:

- The opening setpoint is 200 psig with an accumulation of 5 percent.
- The valve has linear flow characteristics and a maximum rated flow rate of 8 gpm.

The PDP is inadvertently left running when tank pressure reaches 200 psig.

With the PDP still running, at what pressure will the tank stabilize?

A. 190 psig

B. 195 psig

C. 205 psig

D. 210 psig

ANSWER: C.

TOPIC: 291001
KNOWLEDGE: K1.03 [2.7/2.8]
QID: B202

If a pressure control valve at the outlet of a heat exchanger opens farther, system flow rate will _____; and system head loss will _____.

A. increase; decrease

B. increase; increase

C. decrease; decrease

D. decrease; increase

ANSWER: A.

TOPIC: 291001
KNOWLEDGE: K1.03 [2.7/2.8]
QID: B2101 (P2102)

Which one of the following statements describes the flow rate characteristics of a typical gate valve in an operating water system?

A. The first 25 percent of valve disk travel in the open direction will produce a smaller change in flow rate than the last 25 percent of valve disk travel.

B. The first 25 percent of valve disk travel in the open direction will produce a greater change in flow rate than the last 25 percent of valve disk travel.

C. The first 25 percent of valve disk travel in the open direction will produce approximately the same change in flow rate as the last 25 percent of valve disk travel.

D. A gate valve that has been opened to 25 percent of valve disk travel will result in approximately 25 percent of full flow rate.

ANSWER: B.

TOPIC: 291001
KNOWLEDGE: K1.03 [3.4/3.6]
QID: B2205 (P405)

Consider a typical gate valve and a typical globe valve in the same water system application. The globe valve generally has a _____ pressure drop when fully open; and is _____ commonly used for throttling system flow.

A. smaller; less

B. larger; more

C. smaller; more

D. larger; less

ANSWER: B.

TOPIC: 291001
KNOWLEDGE: K1.03 [2.7/2.8]
QID: B2303 (P2303)

A control valve is most likely to experience cavitation when the valve is almost fully _____ because of a relatively _____ pressure drop across the valve seat.

A. open; large

B. open; small

C. closed; large

D. closed; small

ANSWER: C.

TOPIC: 291001
KNOWLEDGE: K1.03 [2.7/2.8]
QID: B2601 (P2302)

Which one of the following statements describes the flow rate characteristics of a typical globe valve in an operating water system?

A. The first 25 percent of valve disk travel in the open direction will produce a smaller increase in flow rate than the last 25 percent of valve disk travel.

B. The first 25 percent of valve disk travel in the open direction will produce a greater increase in flow rate than the last 25 percent of valve disk travel.

C. The first 25 percent of valve disk travel in the open direction will produce approximately the same increase in flow rate as the last 25 percent of valve disk travel.

D. A globe valve that has been opened to 25 percent of valve disk travel will result in approximately 25 percent of full flow rate.

ANSWER: B.

TOPIC: 291001
KNOWLEDGE: K1.03 [2.7/2.8]
QID: B3002 (P3001)

Which one of the following statements describes the throttling characteristics of a typical globe valve?

A. The first third of valve disk travel in the open direction will result in approximately one-third of full flow rate.

B. The first third of valve disk travel in the open direction will produce a smaller increase in flow rate than the last third of valve disk travel.

C. The first third of valve disk travel in the open direction will produce a greater increase in flow rate than the last third of valve disk travel.

D. The first two-thirds of valve disk travel in the open direction will produce approximately the same increase in flow rate as the last third of valve disk travel.

ANSWER: C.

TOPIC: 291001
KNOWLEDGE: K1.03 [2.7/2.8]
QID: B3902 (P3901)

Refer to the drawing of a cooling water system in which both centrifugal pumps A and B are operating (see figure below).

An operator stops pump B, but the pump B check valve fails to close. In comparison to normal operation with only pump A running, operation with the failed pump B check valve will result in pump A flow rate being _____ than normal; and heat exchanger flow rate being _____ than normal.

A. higher; higher

B. higher; lower

C. lower; higher

D. lower; lower

ANSWER: B.

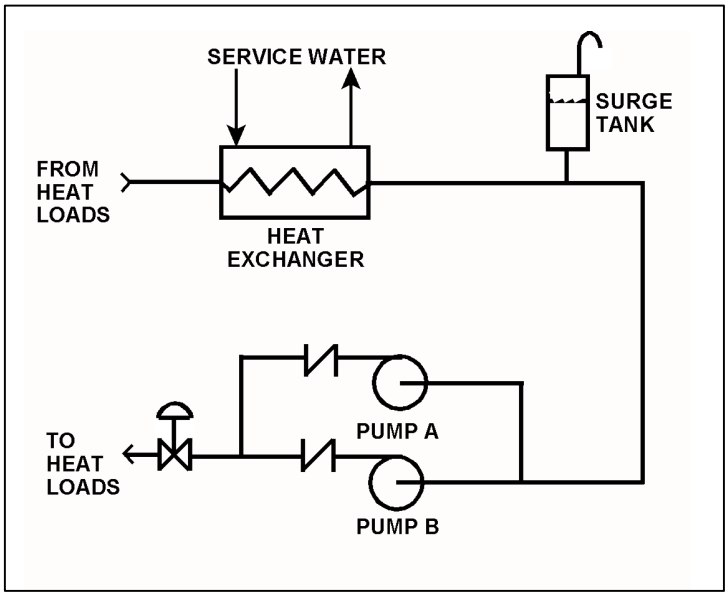

TOPIC: 291001
KNOWLEDGE: K1.03 [2.7/2.8]
QID: B4103 (P4101)

Which one of the following types of similarly sized valves in an operating water system produces the <u>least</u> frictional head loss when fully open?

A. Ball

B. Globe

C. Butterfly

D. Swing check

ANSWER: A.

TOPIC: 291001
KNOWLEDGE: K1.03 [2.7/2.8]
QID: B4802 (P4801)

Refer to the centrifugal pump operating curve with two system head loss curves (see figure below). The curves apply to an open cooling water system using one single-speed centrifugal pump discharging through a typical flow control valve.

One of the system curves shows system head loss with the flow control valve 25 percent open. The other system curve shows system head loss with the flow control valve 100 percent open. The pump is initially operating with the valve 25 percent open, resulting in a pump flow rate of 800 gpm.

If the flow control valve is subsequently fully opened, pump flow rate through the valve will be approximately...

A. 400 gpm.

B. 1,200 gpm.

C. 1,600 gpm.

D. 3,200 gpm.

ANSWER: B.

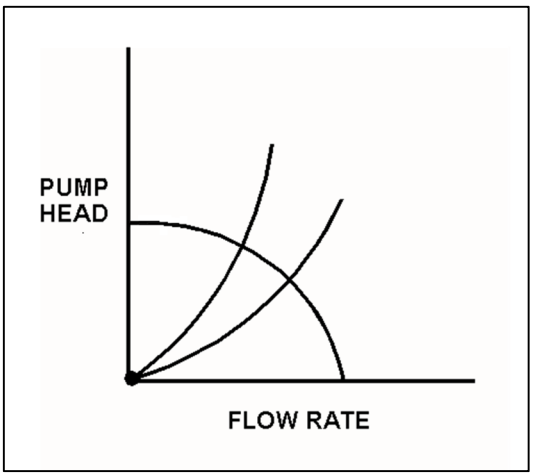

TOPIC: 291001
KNOWLEDGE: K1.03 [2.7/2.8]
QID: B4901 (P4901)

Consider a 6-inch globe valve and a 6-inch gate valve in the same water system application. Typically, the valve that requires the most linear disk travel from fully closed to fully open is the _____ valve; and the valve that produces the smallest pressure drop when fully open is the _____ valve.

A. gate; gate

B. gate; globe

C. globe; gate

D. globe; globe

ANSWER: A.

TOPIC: 291001
KNOWLEDGE: K1.03 [2.7/2.8]
QID: B6001 (P6001)

Subcooled water was flowing through a throttled valve with the following initial parameters:

Inlet pressure = 60 psia
Outlet pressure = 50 psia
Flow rate = 800 gpm

The valve was opened fully and the following parameters currently exist:

Inlet pressure = 60 psia
Outlet pressure = 55 psia

What is the approximate flow rate through the fully open valve?

A. 400 gpm

B. 566 gpm

C. 635 gpm

D. Cannot be determined without additional information.

ANSWER: D.

TOPIC: 291001
KNOWLEDGE: K1.03 [2.7/2.8]
QID: B6601 (P6601)

Subcooled water is flowing through a throttle valve in an open system. The initial steady-state conditions for the throttle valve are as follows:

Inlet pressure = 60 psia
Outlet pressure = 44 psia
Flow rate = 800 gpm

Four hours later, the current steady-state conditions for the throttle valve are as follows:

Inlet pressure = 63 psia
Outlet pressure = 54 psia
Flow rate = 600 gpm

Which one of the following could be responsible for the difference between the initial and current conditions for the throttle valve?

A. The throttle valve was opened more.

B. The throttle valve was closed more.

C. Another valve, located upstream of the throttle valve, was partially closed.

D. Another valve, located downstream of the throttle valve, was partially closed.

ANSWER: D.

TOPIC: 291001
KNOWLEDGE: K1.03 [2.7/2.8]
QID: B7302 (P7302)

Subcooled water is flowing through a throttled valve in an open system. The initial steady-state conditions for the throttled valve are as follows:

Inlet pressure = 60 psia
Outlet pressure = 44 psia
Flow rate = 800 gpm

After four hours, the current steady-state conditions for the throttled valve are as follows:

Inlet pressure = 62 psia
Outlet pressure = 40 psia
Flow rate = 600 gpm

Which one of the following could be responsible for the difference between the initial and current steady-state conditions for the throttled valve?

A. The throttled valve was opened more.

B. The throttled valve was closed more.

C. Another valve, located upstream of the throttled valve, was partially closed.

D. Another valve, located downstream of the throttled valve, was partially closed.

ANSWER: B.

TOPIC: 291001
KNOWLEDGE: K1.03 [2.7/2.8]
QID: B7601 (P7601)

Refer to the drawing of an operating cooling water system (see figure below) in which valves A and B are identical. Valve A is one-half open and valve B is fully open. If valve A is opened fully, the differential pressure (D/P) across valve B will…

A. increase by the same amount as the absolute change in D/P across valve A.

B. increase by an amount less than the absolute change in D/P across valve A.

C. decrease by the same amount as the absolute change in D/P across valve A.

D. decrease by an amount less than the absolute change in D/P across valve A.

ANSWER: B.

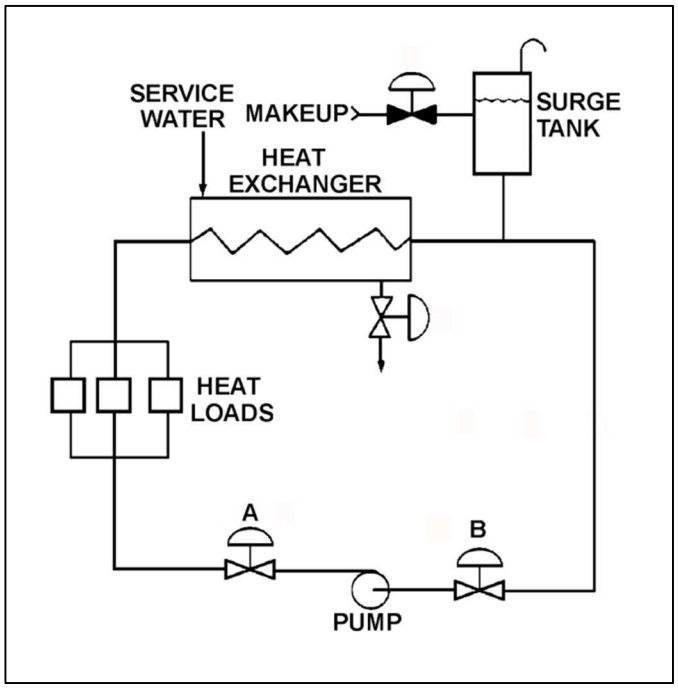

TOPIC: 291001
KNOWLEDGE: K1.03 [2.7/2.8]
QID: B7641 (P7641)

Consider a 6-inch globe valve and a 6-inch gate valve in the same water system application. The valve that typically requires the least linear travel of the disk from fully closed to fully open is the _____ valve; and the valve that produces the greatest pressure drop when fully open is the _____ valve.

A. gate; gate

B. gate; globe

C. globe; gate

D. globe; globe

ANSWER: D.

TOPIC: 291001
KNOWLEDGE: K1.03 [2.7/2.8]
QID: B7661 (P7661)

Subcooled water is flowing through a throttle valve in an open system. The initial steady-state conditions for the throttle valve are as follows:

Inlet pressure	=	60 psia
Outlet pressure	=	44 psia
Flow rate	=	800 gpm

Four hours later, the current steady-state conditions for the throttle valve are as follows:

Inlet pressure	=	51 psia
Outlet pressure	=	42 psia
Flow rate	=	600 gpm

Which one of the following could be responsible for the difference between the initial and current conditions for the throttle valve?

A. The throttle valve was opened more.

B. The throttle valve was closed more.

C. Another valve, located upstream of the throttle valve, was partially closed.

D. Another valve, located downstream of the throttle valve, was partially closed.

ANSWER: C.

TOPIC: 291001
KNOWLEDGE: K1.04 [2.7/2.8]
QID: B502 (P203)

Refer to the drawing of a hydraulically-operated valve that is shown in a throttled position (see figure below).

Select the final position of this valve following a loss of hydraulic system pressure.

A. Fully open

B. As is

C. Fully closed

D. Midposition

ANSWER: A.

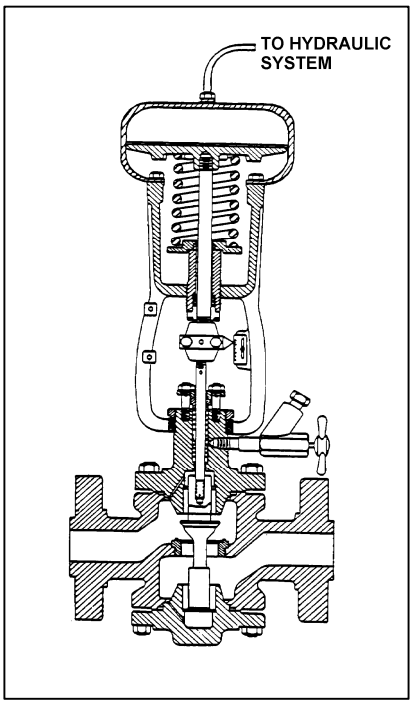

TOPIC: 291001
KNOWLEDGE: K1.04 [2.7/2.8]
QID: B602 (P1202)

How will a typical motor-operated valve respond to a loss of electrical power to the valve actuator?

A. Open fully

B. Close fully

C. Remain as is

D. Move to 50 percent open

ANSWER: C.

TOPIC: 291001
KNOWLEDGE: K1.04 [2.7/2.8]
QID: B1002 (P2104)

Refer to the drawing of a spring-loaded air-operated valve shown in a throttled position (see figure below).

Which one of the following will be the valve position following a reduction in air pressure to the valve actuator caused by a leaking air connection at the valve?

A. Original position

B. More closed

C. More open

D. Varies with system flow

ANSWER: B.

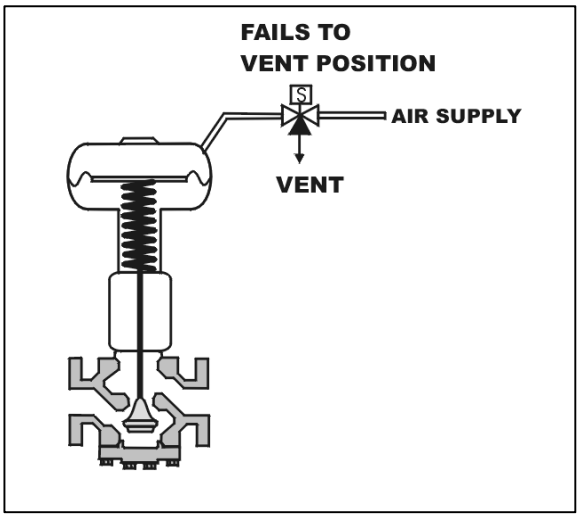

TOPIC: 291001
KNOWLEDGE: K1.04 [2.7/2.8]
QID: B1109 (P1101)

Refer to the drawing of a spring-loaded air-operated valve shown in a throttled position (see figure below).

The figure currently depicts normal air supply pressure and an energized solenoid. What will be the valve position following a loss of electrical power to the solenoid?

A. As is

B. More open

C. More closed

D. Varies with system flow

ANSWER: B.

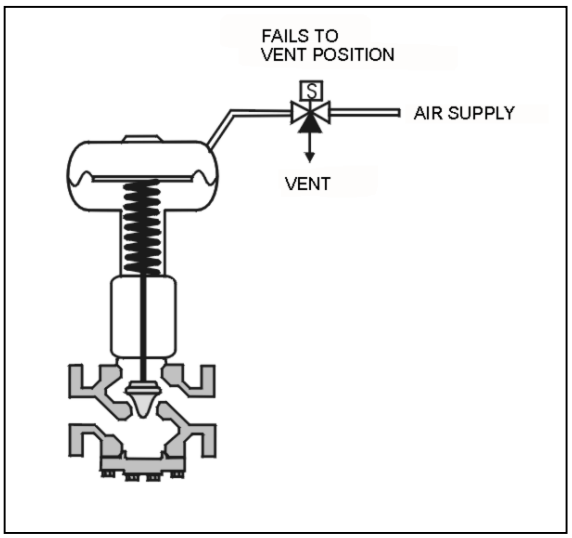

TOPIC: 291001
KNOWLEDGE: K1.04 [2.7/2.8]
QID: B1401 (P112)

Refer to the drawing of a spring-loaded air-operated valve (see figure below) in which the solenoid is shown energized.

Which one of the following will be the final valve position following a loss of electrical power to the solenoid?

A. Midposition

B. Closed

C. As is

D. Open

ANSWER: B.

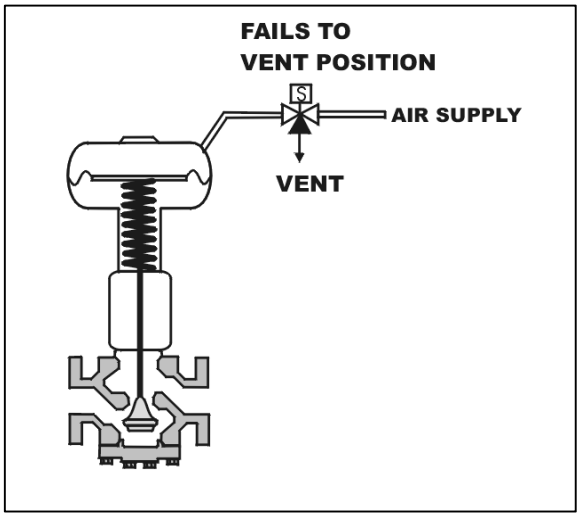

TOPIC: 291001
KNOWLEDGE: K1.04 [2.7/2.8]
QID: B1903 (P101)

Refer to the drawing of a spring-loaded air-operated valve (see figure below).

Upon a loss of air pressure, this valve will...

A. go to the fully open position.

B. remain at the current position.

C. go to the fully closed position.

D. go to the midposition.

ANSWER: C.

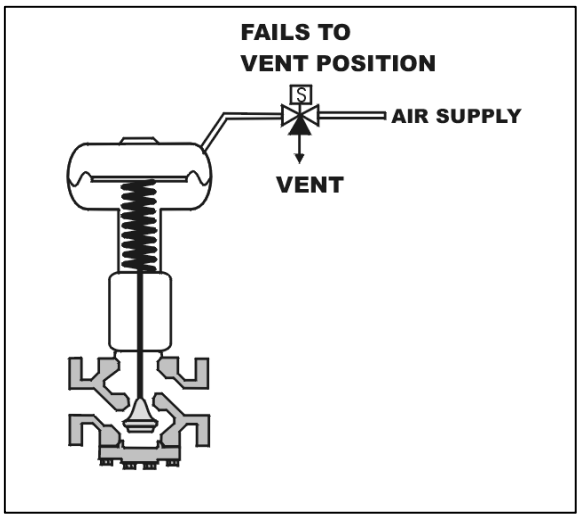

TOPIC: 291001
KNOWLEDGE: K1.04 [2.7/2.8]
QID: B5002 (P5002)

Refer to the drawing of a pneumatically-operated valve (see figure below). The valve actuator may be shown with or without air pressure applied to it.

Which one of the following describes the type of valve shown, and the fail position on loss of air to the actuator?

	Valve Type	Fail Position
A.	Gate	Open
B.	Gate	Closed
C.	Globe	Open
D.	Globe	Closed

ANSWER: C.

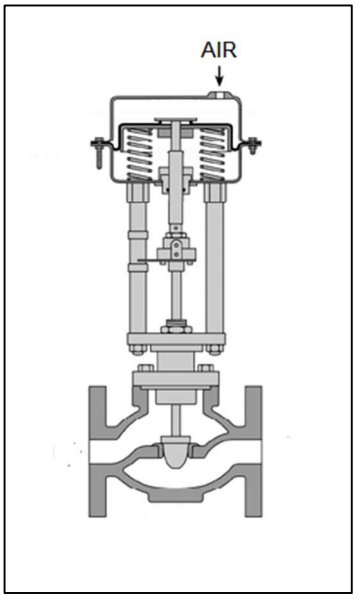

TOPIC: 291001
KNOWLEDGE: K1.04 [2.7/2.8]
QID: B5301 (P5302)

Refer to the drawing of four air-operated valves (see figure below). **Note:** The valve actuators may be shown with or without air pressure applied.

Given:

- The direction of system flow is from left to right when the valves are open.
- The internal components for each valve are identical except for the orientation of the valve disk and seat.
- The valve actuators exert the same force on the attached valve stem for a given applied air pressure.

If each actuator is vented, which valve disk will remain closed with the most force?

A. A.

B. B.

C. C.

D. D.

ANSWER: C.

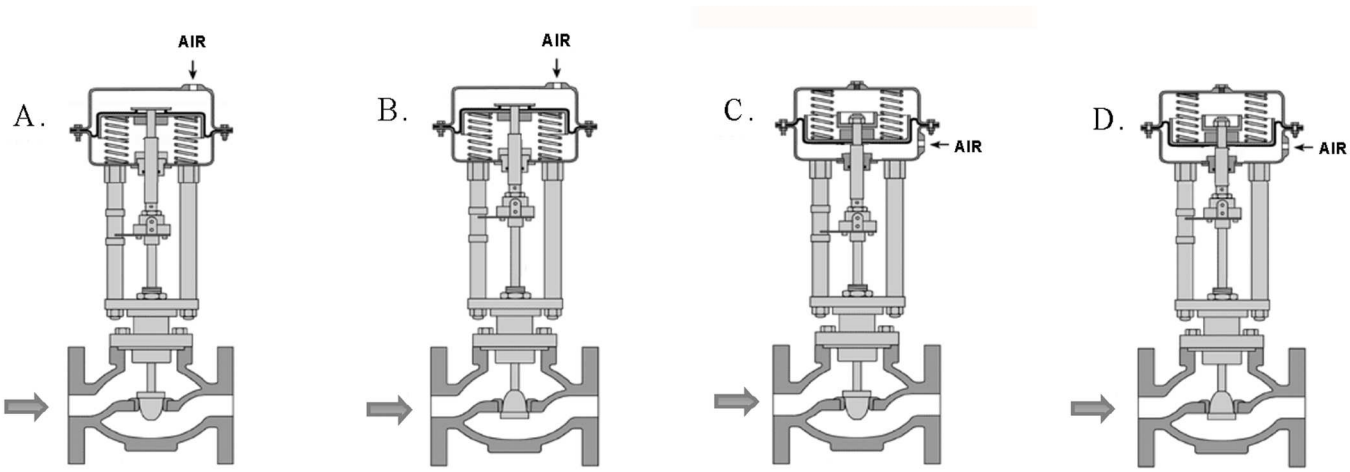

TOPIC: 291001
KNOWLEDGE: K1.04 [2.7/2.8]
QID: B5502 (P5502)

Refer to the drawing of four air-operated valves (see figure below). **Note:** The valve actuators may be shown with or without air pressure applied.

Which valves are currently shown in their failed (i.e., no air pressure applied to the actuator) positions?

A. A and B

B. B and C

C. C and D

D. D and A

ANSWER: B.

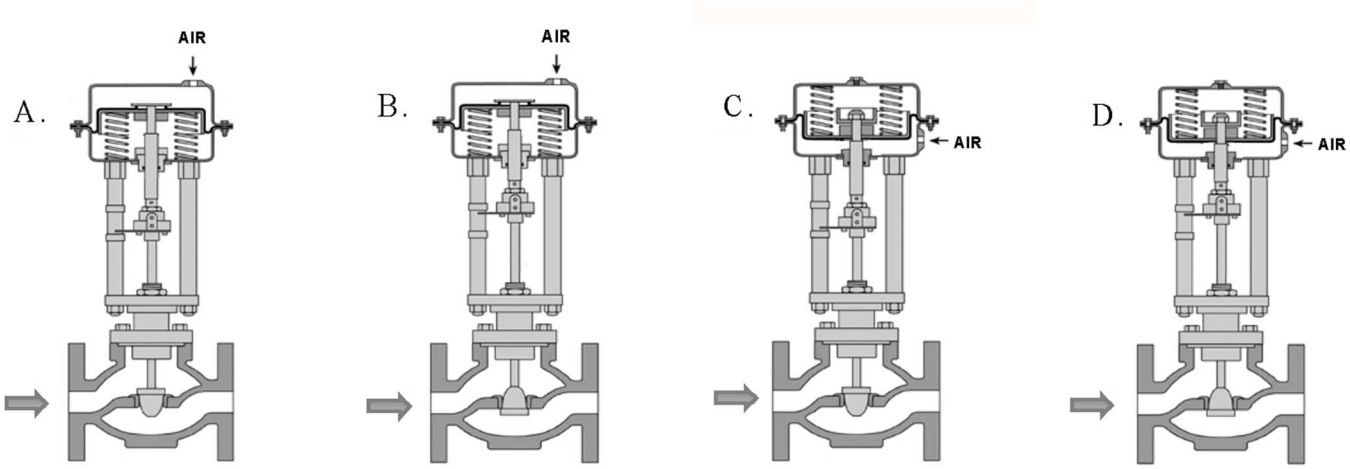

TOPIC: 291001
KNOWLEDGE: K1.04 [2.7/2.8]
QID: B5902 (P5901)

Refer to the drawing of a pneumatically-operated valve (see figure below). The valve actuator may be shown with or without applied air pressure.

Which one of the following describes the type of valve shown, and the valve's fail position on loss of air to the actuator?

	Valve Type	Fail Position
A.	Ball	Open
B.	Ball	Closed
C.	Globe	Open
D.	Globe	Closed

ANSWER: D.

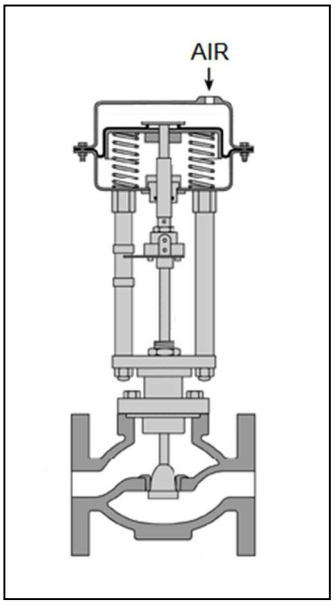

TOPIC: 291001
KNOWLEDGE: K1.05 [2.9/2.8]
QID: B203 (P2103)

Which one of the following is not a generally accepted method for locally verifying that a valve is open?

A. Observe local flow rate instrumentation.

B. Check the local valve position indicator indicates OPEN.

C. Turn the valve operator in the close direction and verify that some movement occurs.

D. Attempt to turn the valve operator in the open direction and verify that no movement occurs.

ANSWER: D.

TOPIC: 291001
KNOWLEDGE: K1.05 [3.2/3.2]
QID: B402 (P5)

To verify that a manual valve in an operating system is closed, the operator should observe valve position indication and operate the valve handwheel in the...

A. open direction until flow sounds are heard, then close the valve using normal force.

B. close direction using normal force and verify there is no substantial handwheel movement.

C. close direction until it stops, then close it an additional one-half turn using additional force if necessary.

D. open direction until the valve stem moves in the open direction, then close the valve using normal force.

ANSWER: B.

TOPIC: 291001
KNOWLEDGE: K1.05 [2.9/2.8]
QID: B503 (P205)

To verify the position of a fully open manual valve in an operating system, the operator should operate the valve handwheel...

A. in the open direction until the valve is backseated one-half turn.

B. to fully close the valve, then open the valve to the fully open position.

C. in the closed direction, then open the valve to its previously open position.

D. to open the valve until it touches the backseat, then close the valve to the desired position.

ANSWER: C.

TOPIC: 291001
KNOWLEDGE: K1.05 [2.9/2.8]
QID: B1404 (P1602)

Which one of the following is a generally accepted method for locally verifying that a manual valve is fully closed in a depressurized static piping system?

A. Check a downstream flow gauge to be indicating zero flow.

B. Visually observe the valve rising-stem threading to be fully exposed.

C. Attempt to turn the valve handwheel in the close direction and verify no movement.

D. Compare an upstream and downstream pressure gauge to ensure zero differential pressure.

ANSWER: C.

TOPIC: 291001
KNOWLEDGE: K1.05 [3.2/3.2]
QID: B1802 (P1704)

To verify a manual valve in an operating system is closed, the operator should observe valve position indication and operate the valve handwheel in the...

A. open direction at least one full rotation, then close the valve using normal force.

B. open direction until system flow is observed, then close the valve using normal force.

C. close direction using normal force and verify there is no substantial handwheel movement.

D. close direction using normal force, then operate the valve handwheel an additional one-quarter turn in the close direction.

ANSWER: C.

TOPIC: 291001
KNOWLEDGE: K1.05 [2.9/2.8]
QID: B2502 (P1602)

Which one of the following is a generally accepted method for locally verifying that a manual valve is fully closed in a depressurized piping system?

A. Check a downstream flow gauge to be indicating zero flow.

B. Compare an upstream and downstream pressure gauge to ensure zero differential pressure.

C. Attempt to turn the valve handwheel in the close direction and verify no movement.

D. Attempt to turn the valve handwheel in the open direction and verify movement.

ANSWER: C.

TOPIC: 291001
KNOWLEDGE: K1.05 [2.9/2.8]
QID: B7621 (P7621)

During a local inspection of a manually operated 12-inch gate valve, the valve stem is observed to extend outward from the valve handwheel by 1 inch. The entire external valve stem is threaded, except for a 1-inch section that becomes smooth just before the valve stem enters the packing gland.

Which one of the following describes the position of the gate valve?

A. The valve is fully open or nearly fully open.

B. The valve is fully closed or nearly fully closed.

C. The valve may be in any position because it is a rising stem gate valve.

D. The valve may be in any position because it is a non-rising stem gate valve.

ANSWER: B.

TOPIC: 291001
KNOWLEDGE: K1.05 [2.9/2.8]
QID: B7651 (P7651)

During a local inspection of a manually operated three-inch gate valve, the valve stem is observed to be flush with the top of the handwheel. Two inches of unthreaded valve stem is visible between the handwheel and the packing gland. The handwheel is mounted to the valve body and valve stem such that the handwheel can be rotated in either direction, but <u>cannot</u> change its axial position.

Which one of the following describes the position of the valve?

A. The valve is fully open or nearly fully open.

B. The valve is fully closed or nearly fully closed.

C. The valve may be in any position because it has a rising stem.

D. The valve may be in any position because it has a non-rising stem.

ANSWER: D.

TOPIC: 291001
KNOWLEDGE: K1.06 [2.7/2.7]
QID: B1003 (P1603)

An adjustment has just been completed on the packing gland of a motor-operated gate valve to stop a minor stem leak. Which one of the following can occur if the technician overtightened the packing gland?

A. Decreased cooling flow to the valve internals.

B. Separation of the valve disk from the valve stem.

C. Misalignment of the valve position limit switches.

D. Increased stroke time from fully open to fully closed.

ANSWER: D.

TOPIC: 291001
KNOWLEDGE: K1.06 [2.7/2.7]
QID: B2802 (P1303)

After an adjustment of the packing gland on a valve that had a minor packing leak, an operator attempts to operate the valve, but finds the valve is stuck. What is the most probable cause?

A. The disk separated from the valve stem as a result of overtightening the packing gland.

B. The operator placed the valve in the wrong position for adjusting the packing gland.

C. The valve was overtorqued in the closed direction during the packing gland adjustment.

D. The maintenance technician overtightened the packing gland, causing the stem to bind.

ANSWER: D.

TOPIC: 291001
KNOWLEDGE: K1.06 [2.7/2.7]
QID: B3503 (P3503)

Refer to the drawing of a water supply pump with two suction sources (see figure below). All motor-operated valves (MOVs) are currently closed.

Which one of the following MOV interlocks will permit the pump to take a suction on either the building sump or the water storage tank, while preventing the two sources from being cross-connected?

A. Neither MOV-1 nor MOV-2 can be opened unless MOV-3 is fully closed.

B. None of the MOVs can be opened unless at least one MOV remains fully closed.

C. None of the MOVs can be opened unless at least two MOVs remain fully closed.

D. Neither MOV-1 nor MOV-2 can be opened unless the other source MOV is fully closed.

ANSWER: D.

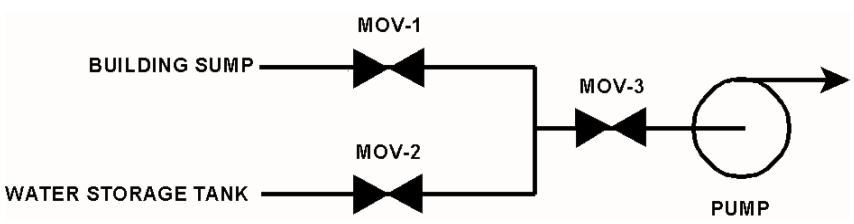

TOPIC: 291001
KNOWLEDGE: K1.07 [3.4/3.4]
QID: B1203

When transferring a valve controller from the manual mode to the automatic mode, the automatic valve controller output signal should be _____ the manual valve controller output signal at the time of transfer.

A. equal to

B. greater than

C. less than

D. increasing with

ANSWER: A.

TOPIC: 291001
KNOWLEDGE: K1.07 [3.4/3.4]
QID: B1502 (P220)

Prior to shifting a valve controller from automatic to manual control, why should the automatic and manual controller output signals be matched?

A. To ensure the valve will operate in manual control upon demand.

B. To ensure valve position indication is accurate in manual control.

C. To move the valve to the new position prior to the transfer.

D. To prevent a sudden valve repositioning during the transfer.

ANSWER: D.

TOPIC: 291001
KNOWLEDGE: K1.07 [3.4/3.4]
QID: B2204 (P802)

Two common types of check valves used in nuclear power plants are...

A. globe and gate.

B. ball and plug.

C. swing and lift.

D. needle and angle.

ANSWER: C.

TOPIC: 291001
KNOWLEDGE: K1.08 [3.4/3.5]
QID: B108 (P403)

When manually positioning a motor-operated valve, why must care be taken to avoid using excessive valve seating/backseating force?

A. Limit switch settings may change.

B. The valve may not operate on demand.

C. The motor may not reengage.

D. Torque switch settings may change.

ANSWER: B.

TOPIC: 291001
KNOWLEDGE: K1.08 [3.4/3.5]
QID: B204 (P204)

When the manual declutch lever of a motor-operated valve is moved out of the normal position, it _____ the motor and _____ the handwheel.

A. engages; engages

B. engages; disengages

C. disengages; engages

D. disengages; disengages

ANSWER: C.

TOPIC: 291001
KNOWLEDGE: K1.08 [3.4/3.5]
QID: B1605 (P1702)

A typical motor-operated valve with a declutch lever is installed in an emergency core cooling system (ECCS) application. The ECCS actuation signal is designed to energize the valve motor and open the valve. The valve is currently open, but being manually/locally closed by a technician as required by a surveillance test procedure. The declutch lever has been operated and released, and the valve is being closed by operation of the valve handwheel.

If an ECCS actuation signal is received, how will the valve be affected?

A. The handwheel will disengage and the valve will automatically open.

B. The handwheel will disengage and the valve will remain in the current position.

C. The handwheel will remain engaged and the valve will automatically open.

D. The handwheel will remain engaged and the technician can continue to close the valve.

ANSWER: A.

TOPIC: 291001
KNOWLEDGE: K1.08 [3.4/3.5]
QID: B2004 (P2003)

A surveillance test procedure is being performed on a typical motor-operated valve (MOV) with a declutch lever that is used in an emergency core cooling system (ECCS) application. The declutch lever has been operated and released, and the valve is being manually/locally opened by a technician. The MOV breaker is closed as required by the surveillance test procedure. During operation of the valve handwheel, an ECCS actuation signal is received that normally energizes the valve motor and closes the valve.

How will the valve be affected by the actuation signal?

A. The handwheel will disengage and the valve will automatically close.

B. The handwheel will disengage and the valve will remain in the current position.

C. The handwheel will remain engaged and the valve will automatically close.

D. The handwheel will remain engaged and the technician can continue to open the valve.

ANSWER: A.

TOPIC: 291001
KNOWLEDGE: K1.08 [3.4/3.5]
QID: B2603 (P2503)

When manually closing a motor-operated valve, why must the operator avoid using excessive valve seating force?

A. The valve may bind and cause the motor to trip on overload during subsequent remote operation.

B. The valve actuator clutch may be damaged and disable subsequent remote operation.

C. The valve stem limit switches may be damaged and cause inaccurate remote valve position indication.

D. The valve actuator position indicator may be damaged and cause inaccurate local valve position indication.

ANSWER: A.

TOPIC: 291001
KNOWLEDGE: K1.08 [3.4/3.5]
QID: B2704 (P2703)

A typical motor-operated valve (MOV) has just been opened from the main control room, and the breaker for the MOV has been opened. A plant operator has been directed to close the MOV locally for a surveillance test.

If the operator attempts to turn the MOV handwheel in the clockwise direction without first operating the declutch lever, which one of the following will occur?

A. The handwheel will turn, but the valve stem will not move.

B. The handwheel will not turn, and the valve stem will not move.

C. The handwheel will turn, and the valve stem will move toward the closed position because the clutch is automatically engaged when the handwheel is turned.

D. The handwheel will turn, and the valve stem will move toward the closed position because the clutch is automatically engaged when the breaker is opened.

ANSWER: A.

TOPIC: 291001
KNOWLEDGE: K1.08 [3.4/3.5]
QID: B4003 (P4002)

Which one of the following types of similarly sized valves requires the most manual valve stem rotation to move the valve from fully open to fully closed? (Assume that each valve has a non-rising stem.)

A. Ball

B. Gate

C. Plug

D. Butterfly

ANSWER: B.

TOPIC: 291001
KNOWLEDGE: K1.09 [2.7/2.7]
QID: B3304 (P3304)

A typical motor-operated valve has been returned to service following a complete maintenance overhaul of the valve and actuator. The valve was remotely opened and closed to verify operability. The measured valve stroke time in each direction was 15 seconds, which is 25 percent longer than normal.

Which one of the following could have caused the increased stroke time?

A. The valve position limit switches were removed and were not reinstalled.

B. The valve torque limit switches were misadjusted to open at half their normal setpoints.

C. The valve was packed with improved packing material having a lower friction coefficient.

D. The valve stem packing gland was overtightened after the packing material was replaced.

ANSWER: D.

TOPIC: 291001
KNOWLEDGE: K1.09 [2.7/2.7]
QID: B7631 (P7631)

A typical motor-operated valve has been returned to service following a complete maintenance overhaul of the valve and actuator. When the valve was remotely opened and closed to verify operability, the measured valve stroke time in each direction was 15 seconds, which is shorter than normal for this valve.

Which one of the following could have caused the shorter stroke time?

A. The valve position limit switches were removed and were not reinstalled.

B. The valve torque limit switches were misadjusted to open at twice their normal setpoints.

C. The valve was packed with improved packing material having a lower friction coefficient.

D. The valve stem packing gland was overtightened after the packing material was replaced.

ANSWER: C.

TOPIC: 291001
KNOWLEDGE: K1.10 [3.1/3.1]
QID: B205 (P1503)

Check valves are normally used to prevent...

A. overpressurization of nonoperating system piping and components.

B. backflow through nonoperating components or flowpaths.

C. pump runout by providing a constant backpressure.

D. pump cavitation by keeping nonoperating systems filled.

ANSWER: B.

TOPIC: 291001
KNOWLEDGE: K1.10 [3.1/3.1]
QID: B302 (P303)

A stop check valve is a type of check valve that...

A. cannot be shut remotely.

B. can be used to prevent flow in both directions.

C. contains both a gate valve disk and a check valve disk.

D. can be opened manually to allow flow in both directions.

ANSWER: B.

TOPIC: 291001
KNOWLEDGE: K1.10 [3.1/3.1]
QID: B1102 (P2202)

Which one of the following is the type of valve used to control the direction of fluid flow through a system and prevent backflow?

A. Butterfly valve

B. Gate valve

C. Globe valve

D. Check valve

ANSWER: D.

TOPIC: 291001
KNOWLEDGE: K1.10 [3.1/3.1]
QID: B2903 (P1003)

A typical check valve is designed to...

A. permit flow in only one direction.

B. prevent system overpressure.

C. isolate system components.

D. perform automatic pump venting.

ANSWER: A.

TOPIC: 291001
KNOWLEDGE: K1.11 [3.2/3.2]
QID: B6 (P1902)

Which one of the following describes the function and use of the backseat on a manual valve?

A. Removes pressure from the packing/stuffing box and is typically used to isolate the stuffing box for valve repacking.

B. Removes pressure from the packing/stuffing box and is typically used when needed to isolate packing leakage.

C. Acts as a backup in case the primary seat leaks and is typically used during system isolation for personnel protection.

D. Acts as a backup in case the primary seat leaks and is typically used when needed to prevent the primary seat from leaking excessively.

ANSWER: B.

TOPIC: 291001
KNOWLEDGE: K1.11 [3.2/3.2]
QID: B206 (P201)

An operator attempts to close a fully-open upright manual gate valve to isolate a pump in a cooling water system that has been cooled down for maintenance. However, the operator is unable to rotate the handwheel in the close direction.

Which one of the following could cause this condition?

A. A hydraulic lock has developed under the valve disk.

B. A hydraulic lock has developed in the valve bonnet between the valve disk and the packing gland.

C. The two halves of the valve disk have expanded and are jammed against the valve seats.

D. The valve disk has jammed against its backseat by the difference in the thermal contraction of the stem and the bonnet.

ANSWER: D.

TOPIC: 291001
KNOWLEDGE: K1.11 [3.2/3.2]
QID: B1705 (P1405)

Refer to the drawing of a valve (see figure below).

Which one of the following describes the type of valve shown?

A. Rising-stem globe valve

B. Nonrising-stem globe valve

C. Rising-stem gate valve

D. Nonrising-stem gate valve

ANSWER: D.

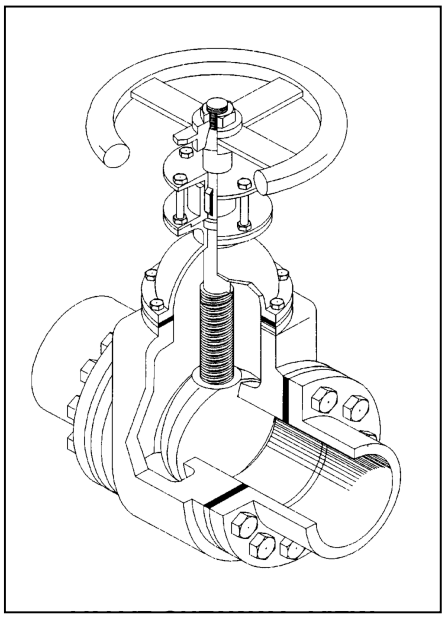

TOPIC: 291001
KNOWLEDGE: K1.11 [3.2/3.2]
QID: B2504 (P2504)

In a comparison between butterfly valves and ball valves, _____ valves are generally more leak-tight in high pressure applications; and _____ valves generally exhibit the smaller pressure decrease when fully open.

A. ball; ball

B. ball; butterfly

C. butterfly; ball

D. butterfly; butterfly

ANSWER: A.

TOPIC: 291001
KNOWLEDGE: K1.11 [3.2/3.2]
QID: B2904 (P2903)

In a comparison between ball valves and butterfly valves in the same water system application, the valve that typically would allow more leakage when fully closed with a high differential pressure is the _____ valve; and the valve that typically would cause the greater pressure loss when fully open is the _____ valve.

A. ball; butterfly

B. ball; ball

C. butterfly; butterfly

D. butterfly; ball

ANSWER: C.

TOPIC: 291001
KNOWLEDGE: K1.11 [3.2/3.2]
QID: B3804 (P3804)

In a comparison between ball valves and butterfly valves in the same water system application, the valve that would typically be more leak-tight when fully closed with a high differential pressure is the _____ valve; and the valve that typically results in the greater pressure decrease when fully open is the _____ valve.

A. ball; butterfly

B. ball; ball

C. butterfly; butterfly

D. butterfly; ball

ANSWER: A.

TOPIC: 291001
KNOWLEDGE: K1.11 [3.2/3.2]
QID: B7003 (P7002)

In a comparison between ball valves and butterfly valves in the same cooling water system application, the valve that would typically experience the greater seat leakage when fully closed with a large differential pressure is the _____ valve; and the valve that would typically cause the smaller head loss when fully open is the _____ valve.

A. ball; butterfly

B. ball; ball

C. butterfly; butterfly

D. butterfly; ball

ANSWER: D.

TOPIC: 291001
KNOWLEDGE: K1.12 [2.6/2.8]
QID: B16

Which one of the following valves is <u>most</u> <u>likely</u> to be used in a throttling application?

A. Stop valve

B. Globe valve

C. Gate valve

D. Butterfly valve

ANSWER: B.

TOPIC: 291001
KNOWLEDGE: K1.12 [2.6/2.8]
QID: B110

Some valve positioning (drive) devices are capable of stopping the valve between a fully open and a fully closed (throttled) position. Which one of the following valves has the best throttling characteristics?

A. Stop valve

B. Globe valve

C. Gate valve

D. Butterfly valve

ANSWER: B.

TOPIC: 291001
KNOWLEDGE: K1.12 [2.6/2.8]
QID: B172

Globe valves are preferred over gate valves for throttling because...

A. flow control is more linear for globe valves than for gate valves.

B. head loss from a fully open globe valve is smaller than the head loss from a fully open gate valve.

C. valve position indication for a midpositioned valve is more reliable for globe valves than for gate valves.

D. valve motor operators are more adaptable to globe valves than to gate valves.

ANSWER: A.

TOPIC: 291001
KNOWLEDGE: K1.12 [2.6/2.8]
QID: B406

Gate valves are most often used to...

A. protect system integrity by relieving excess pressure.

B. redirect fluid flow in an operating system.

C. isolate fluid flow in an operating system.

D. control fluid flow rate in an operating system.

ANSWER: C.

TOPIC: 291001
KNOWLEDGE: K1.12 [2.6/2.8]
QID: B504 (P1104)

Gate valves should not be used to throttle fluid flow because...

A. the tortuous flow path through a gate valve body makes flow control difficult.

B. gate valves must be fully opened and backseated to prevent stem leakage.

C. the turbulent flow created by a partially opened gate valve will cause erosion damage to the valve seat.

D. the large size of the gate valve disk requires an oversized actuator to accurately position the disk.

ANSWER: C.

TOPIC: 291001
KNOWLEDGE: K1.12 [2.6/2.8]
QID: B805 (P2604)

A gate valve is generally a poor choice for throttling fluid flow because...

A. the turbulent flow created by a partially opened gate valve can cause extensive damage to the valve.

B. the tortuous path through a gate valve body can make flow control difficult.

C. excessive stem leakage will result unless the gate valve is fully open or fully closed.

D. the head loss from a throttled gate valve will result in an unacceptable reduction in system flow rate.

ANSWER: A.

TOPIC: 291001
KNOWLEDGE: K1.12 [2.6/2.8]
QID: B905 (P2404)

In a comparison between gate valves and globe valves in the same water system application, gate valves...

A. are more effective at throttling flow.

B. are more effective as pressure regulating valves.

C. produce a larger pressure decrease when fully open.

D. require more force to open against large differential pressures.

ANSWER: D.

TOPIC: 291001
KNOWLEDGE: K1.12 [2.6/2.8]
QID: B1205 (P2004)

After an adjustment of the packing gland on a valve that had a minor packing leak, the operator attempts to operate the valve, but finds that the valve is stuck. What is the most probable cause?

A. The disk separated from the valve stem as a result of overtightening the packing gland.

B. The operator placed the valve in the wrong position for adjusting the packing gland.

C. The valve was overtorqued in the close direction during the packing gland adjustment.

D. The maintenance technician overtightened the packing gland, causing the stem to bind.

ANSWER: D.

TOPIC: 291001
KNOWLEDGE: K1.12 [2.6/2.8]
QID: B1305 (P1901)

Which one of the following is a disadvantage associated with using a gate valve, versus a globe valve, to throttle flow in a cooling water system?

A. The tortuous flow path through a throttled gate valve body makes flow control difficult.

B. A gate valve will experience stem leakage unless it is fully opened and backseated.

C. The turbulent flow created by a throttled gate valve will cause erosion damage to the valve seat.

D. A fully open gate valve will produce a greater system head loss than a fully open globe valve.

ANSWER: C.

TOPIC: 291001
KNOWLEDGE: K1.12 [2.6/2.8]
QID: B1505 (P1302)

Consider a 3-inch gate valve and a 3-inch globe valve in separate but identical operating water systems. If both valves are fully open, the gate valve will produce the _____ head loss and the _____ flow rate.

A. smaller; larger

B. larger; smaller

C. smaller; smaller

D. larger; larger

ANSWER: A.

TOPIC: 291001
KNOWLEDGE: K1.12 [2.6/2.8]
QID: B1604 (P1604)

In a comparison between a typical gate valve and a typical globe valve in the same water system application with both valves fully open, the gate valve has a _____ pressure drop and is normally used in _____ flow applications.

A. larger; throttling

B. larger; on/off

C. smaller; throttling

D. smaller; on/off

ANSWER: D.

TOPIC: 291001
KNOWLEDGE: K1.12 [2.6/2.8]
QID: B1805 (P1501)

Consider a 3-inch gate valve and a 3-inch globe valve in the same flowing water system application. If both valves are fully open, the globe valve produces the _____ head loss and the _____ flow rate.

A. larger; larger

B. larger; smaller

C. smaller; larger

D. smaller; smaller

ANSWER: B.

TOPIC: 291001
KNOWLEDGE: K1.12 [2.6/2.8]
QID: B2005 (P602)

In a comparison between a globe valve and a gate valve in the same water system application, the gate valve has a _____ pressure drop when fully open and is the _____ choice for throttling.

A. higher; better

B. lower; better

C. higher; poorer

D. lower; poorer

ANSWER: D.

TOPIC: 291001
KNOWLEDGE: K1.12 [2.6/2.8]
QID: B2305 (P2304)

In a comparison between globe valves and gate valves in the same water system application, globe valves...

A. are less effective at throttling flow.

B. are less effective as pressure regulating valves.

C. produce a smaller pressure decrease when fully open.

D. require less force to open against large differential pressures.

ANSWER: D.

TOPIC: 291001
KNOWLEDGE: K1.12 [2.6/2.8]
QID: B2605 (P2204)

Why are gate valves generally not used to throttle water flow?

A. Rapid changes in flow direction inside the valve cause a large unrecoverable system head loss.

B. Gate valves experience stem leakage unless they are fully open or fully closed.

C. The turbulent flow created by a partially opened gate valve causes excessive seat and disk wear.

D. Flow rate through a gate valve is not proportional to the differential pressure across the valve.

ANSWER: C.

TOPIC: 291002
KNOWLEDGE: K1.01 [2.4/2.5]
QID: B9

What happens to the pressure and velocity of water as it passes through a venturi?

A. Pressure remains constant, but the velocity increases as the diameter of the venturi decreases.

B. Pressure increases, but the velocity decreases as the diameter of the venturi decreases.

C. Pressure decreases, but the velocity remains constant as the diameter of the venturi increases.

D. Pressure increases, but the velocity decreases as the diameter of the venturi increases.

ANSWER: D.

TOPIC: 291002
KNOWLEDGE: K1.01 [2.4/2.5]
QID: B159

Which one of the following is a characteristic of a venturi flow device?

A. Develops an output signal by measuring the differential pressure of the fluid as it passes through the device.

B. Can measure the rate of flow of incompressible fluids, but <u>not</u> of compressible fluids.

C. Develops an output signal by measuring the velocity of the fluid as it passes through the device.

D. Produces a head loss that is greater than the head loss produced by an orifice.

ANSWER: A.

TOPIC: 291002
KNOWLEDGE: K1.01 [2.4/2.5]
QID: B305 (P308)

A cooling water system is operating at steady-state conditions indicating 900 gpm with 60 psid across the flow transmitter venturi. If cooling water flow rate is increased to 1,800 gpm, differential pressure across the flow transmitter venturi will be approximately...

A. 85 psid.

B. 120 psid.

C. 175 psid.

D. 240 psid.

ANSWER: D.

TOPIC: 291002
KNOWLEDGE: K1.01 [2.4/2.5]
QID: B407 (P1606)

Refer to the drawing in which water is flowing through a convergent-divergent venturi (see figure below). The pipe diameters at P1 and P2 are equal.

Compared to the conditions at the inlet of the venturi (P1), the pressure at the outlet of the venturi (P2) has _____; and water velocity at the outlet of the venturi has _____. (Assume "real" conditions.)

A. remained the same; remained the same

B. remained the same; decreased slightly

C. decreased slightly; remained the same

D. decreased slightly; decreased slightly

ANSWER: C.

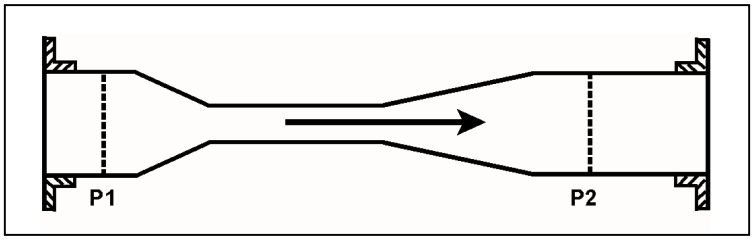

TOPIC: 291002
KNOWLEDGE: K1.01 [2.4/2.5]
QID: B508

As water flows through a venturi flow element, the _____ pressure and the _____ velocity of the fluid occurs at the throat of the venturi.

A. highest; highest

B. lowest; lowest

C. lowest; highest

D. highest; lowest

ANSWER: C.

TOPIC: 291002
KNOWLEDGE: K1.01 [2.4/2.5]
QID: B706 (P707)

A cooling water system is operating at a steady-state flow rate of 700 gpm with 60 psid across the flow transmitter venturi. If cooling water flow rate is increased to 1,000 gpm, differential pressure across the flow transmitter venturi will be...

A. 85.7 psid.

B. 122.4 psid.

C. 171.4 psid.

D. 244.8 psid.

ANSWER: B.

TOPIC: 291002
KNOWLEDGE: K1.01 [2.4/2.5]
QID: B807 (P807)

Refer to the drawing of a venturi flow element (see figure below) with direction of water flow indicated by the arrow.

Where should the high pressure tap of a differential pressure flow detector be connected?

A. Point A

B. Point B

C. Point C

D. Point D

ANSWER: A.

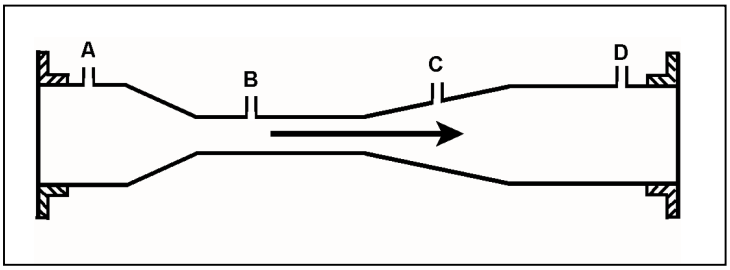

TOPIC: 291002
KNOWLEDGE: K1.01 [2.4/2.5]
QID: B907 (P1308)

Refer to the drawing of a venturi flow element in an operating cooling water system (see figure below).

A differential pressure detector measuring flow rate through the venturi will produce the highest flow rate indication if its high-pressure tap is connected at point _____; and its low-pressure tap is connected at point _____.

A. A; B

B. A; D

C. B; C

D. B; D

ANSWER: A.

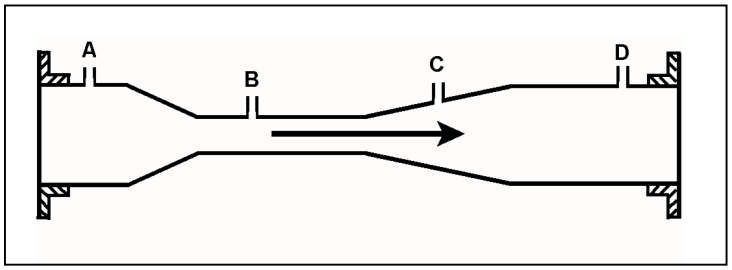

TOPIC: 291002
KNOWLEDGE: K1.01 [2.4/2.5]
QID: B2010 (P3306)

A cooling water system is operating at steady-state conditions. A calibrated system flow meter indicates 600 gpm with 50 psid across the flow element.

If cooling water flow rate increases to 900 gpm, the differential pressure sensed by the flow element will be approximately...

A. 63 psid.

B. 75 psid.

C. 97 psid.

D. 112 psid.

ANSWER: D.

TOPIC: 291002
KNOWLEDGE: K1.01 [2.4/2.5]
QID: B2106 (P908)

Which one of the following flow measuring elements produces the largest unrecoverable head loss when used in an operating fluid system?

A. Venturi

B. Flow nozzle

C. Pipe elbow

D. Orifice

ANSWER: D.

TOPIC: 291002
KNOWLEDGE: K1.01 [2.4/2.5]
QID: B2206 (P2406)

A cooling water system is operating at a steady-state flow rate of 700 gpm with 60 psid across the associated venturi flow element. If cooling water flow rate increases to 900 gpm, the differential pressure sensed by the venturi flow element will be approximately...

A. 68 psid.

B. 77 psid.

C. 99 psid.

D. 127 psid.

ANSWER: C.

TOPIC: 291002
KNOWLEDGE: K1.01 [2.4/2.5]
QID: B2306 (P2306)

A venturi is being used to measure the flow rate in a cooling water system. As the water flows from the throat to the discharge of the venturi, water pressure will _____; and volumetric flow rate will _____. (Assume water is incompressible.)

A. increase; remain the same

B. increase; increase

C. decrease; remain the same

D. decrease; decrease

ANSWER: A.

TOPIC: 291002
KNOWLEDGE: K1.01 [2.4/2.5]
QID: B2506 (P2505)

A main steam flow rate measuring instrument uses a steam pressure input to produce main steam mass flow rate indication. Assuming steam volumetric flow rate does not change, a steam pressure decrease will cause indicated steam mass flow rate to...

A. increase, because the density of the steam has increased.

B. decrease, because the density of the steam has decreased.

C. remain the same, because steam pressure does not affect the mass flow rate of steam.

D. remain the same, because the steam pressure input compensates for changes in steam pressure.

ANSWER: B.

TOPIC: 291002
KNOWLEDGE: K1.01 [2.4/2.5]
QID: B2806 (P2808)

A differential pressure detector is being used with an orifice plate to measure water flow rate through a pipe. When the flow detector was last calibrated, the following parameters were observed:

Upstream Pressure = 135 psig
Downstream Pressure = 120 psig

Actual Flow Rate = 100 gpm
Indicated Flow Rate = 100 gpm

Significant erosion of the orifice hole has occurred since the last calibration, such that actual flow rate through the orifice has increased to 120 gpm while the upstream and downstream pressures have changed to 124 psig and 109 psig respectively.

What is the currently indicated flow rate?

A. 44 gpm

B. 67 gpm

C. 100 gpm

D. 120 gpm

ANSWER: C.

TOPIC: 291002
KNOWLEDGE: K1.01 [2.4/2.5]
QID: B3206 (P3207)

A cooling water system uses a horizontal venturi with a differential pressure flow detector to provide flow rate indication. Water enters and leaves the venturi at 70°F, 120 psig, and 20 ft/sec. Water velocity at the throat of the venturi is 45 ft/sec. Assume water is incompressible and the venturi experiences no unrecoverable head loss.

What is the approximate pressure of the water at the throat of the venturi?

A. 109 psig

B. 98 psig

C. 86 psig

D. 71 psig

ANSWER: A.

TOPIC: 291002
KNOWLEDGE: K1.01 [2.4/2.5]
QID: B3306 (P1106)

Refer to the drawing of a venturi flow element in an operating cooling water system (see figure below).

At what point does the lowest pressure exist?

A. Point A

B. Point B

C. Point C

D. Point D

ANSWER: B.

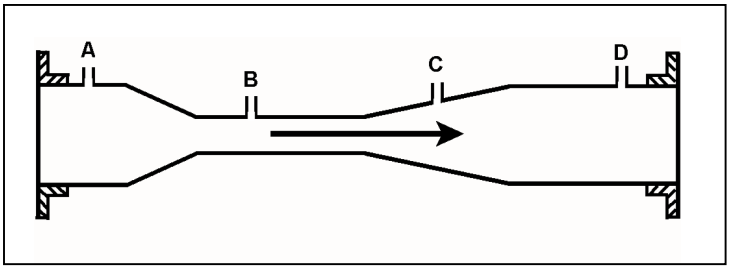

TOPIC: 291002
KNOWLEDGE: K1.01 [2.4/2.5]
QID: B3706 (P3706)

The following is the current calibration data for an orifice plate that is being used for water flow rate measurement:

Upstream Pressure = 135 psig
Downstream Pressure = 120 psig
Flow Rate = 100 gpm

During a surveillance, the following pressures are observed across the orifice plate:

Upstream Pressure = 124 psig
Downstream Pressure = 117 psig

What is the approximate water flow rate through the orifice plate?

A. 47 gpm

B. 57 gpm

C. 68 gpm

D. 78 gpm

ANSWER: C.

TOPIC: 291002
KNOWLEDGE: K1.01 [2.4/2.5]
QID: B4804 (P4804)

A cooling water system uses a horizontal venturi with a differential pressure flow detector to provide flow rate indication. Water enters and leaves the venturi at 70°F, 100 psig, and 24 ft/sec. Water velocity at the throat of the venturi is 50 ft/sec. Assume water is incompressible and the venturi experiences no unrecoverable head loss.

What is the approximate pressure of the water at the throat of the venturi?

A. 98 psig

B. 94 psig

C. 87 psig

D. 74 psig

ANSWER: C.

TOPIC: 291002
KNOWLEDGE: K1.01 [2.4/2.5]
QID: B6104 (P6103)

For water flowing through a venturi, there is a proportional relationship between flow rate and differential pressure. For steam flowing through a venturi, the relationship must be modified to account for changes in _____ as the steam flows through the venturi.

A. velocity

B. enthalpy

C. internal energy

D. specific volume

ANSWER: D.

TOPIC: 291002
KNOWLEDGE: K1.01 [2.4/2.5]
QID: B6804 (P6803)

Refer to the drawing of a frictionless venturi flow element (see figure below). Subcooled water is flowing through the venturi with the following initial conditions:

Flow rate = 500 gpm
Tap A pressure = 40 psia
Tap B pressure = 36 psia

Flow rate increases to 1,000 gpm, which results in a tap A pressure of 68 psia. What is the new pressure at tap B?

A. 60 psia

B. 52 psia

C. 44 psia

D. 32 psia

ANSWER: B.

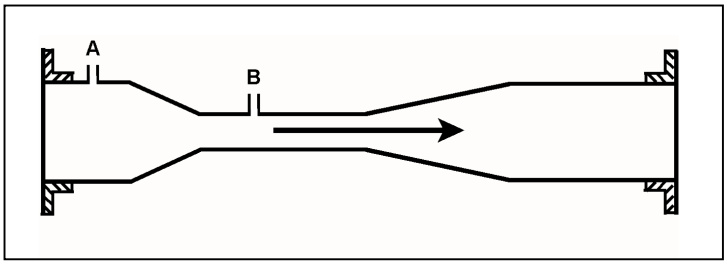

TOPIC: 291002
KNOWLEDGE: K1.01 [2.4/2.5]
QID: B7632 (P7632)

Refer to the drawing of a frictionless venturi flow element (see figure below). Subcooled water is flowing through the venturi with the following initial conditions:

Flow rate = 500 gpm
Tap A pressure = 40 psia
Tap B pressure = 36 psia

When flow rate is increased to 750 gpm, the pressure at tap A increases to 68 psia. What is the new pressure at tap B?

A. 66 psia

B. 62 psia

C. 59 psia

D. 52 psia

ANSWER: C.

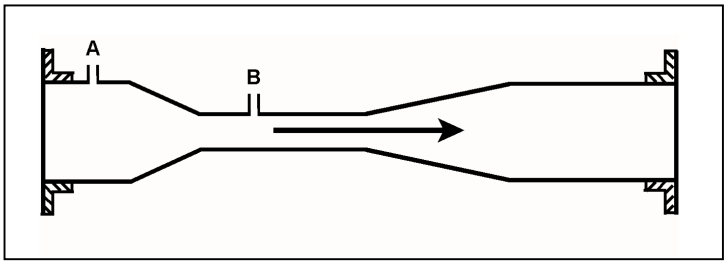

TOPIC: 291002
KNOWLEDGE: K1.01 [2.4/2.5]
QID: B7681 (P7681)

Refer to the drawing of a frictionless venturi flow element (see figure below). Subcooled water is flowing through the venturi with the following initial conditions:

Flow rate = 500 gpm
Tap A pressure = 48 psia
Tap B pressure = 44 psia

When flow rate is increased to 900 gpm, the pressure at tap A increases to 62 psia. What is the new pressure at tap B?

A. 46 psia

B. 49 psia

C. 55 psia

D. 60 psia

ANSWER: B.

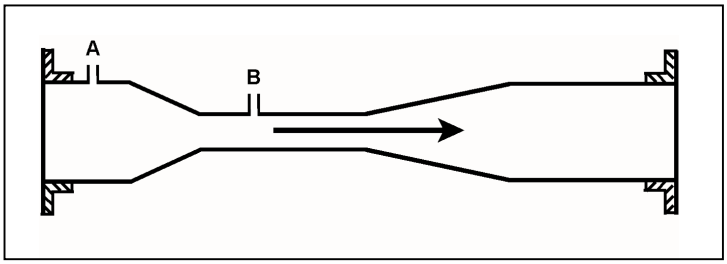

TOPIC: 291002
KNOWLEDGE: K1.02 [2.4/2.5]
QID: B10

The change in pressure across a main steam line flow element is...

A. directly proportional to the volumetric flow rate.

B. inversely proportional to the volumetric flow rate.

C. directly proportional to the mass flow rate.

D. inversely proportional to the mass flow rate.

ANSWER: A.

TOPIC: 291002
KNOWLEDGE: K1.02 [2.4/2.5]
QID: B906

If the density input to a density-compensated steam flow instrument rapidly fails high, the <u>indicated</u> flow will...

A. increase and stabilize at a new higher value.

B. increase temporarily, then return to its initial value.

C. decrease and stabilize at a new lower value.

D. decrease temporarily, then return to its initial value.

ANSWER: A.

TOPIC: 291002
KNOWLEDGE: K1.02 [2.4/2.5]
QID: B1606 (P406)

The density compensating input to a steam flow instrument is used to convert volumetric flow rate to…

A. velocity flow rate.

B. gallons per minute.

C. mass flow rate.

D. differential flow rate.

ANSWER: C.

TOPIC: 291002
KNOWLEDGE: K1.02 [2.4/2.5]
QID: B1806 (P6)

Density input is normally used in steam flow instruments to convert _____ into _____.

A. mass flow rate; volumetric flow rate

B. volumetric flow rate; mass flow rate

C. mass flow rate; differential pressure

D. differential pressure; volumetric flow rate

ANSWER: B.

TOPIC: 291002
KNOWLEDGE: K1.02 [2.4/2.6]
QID: B2906 (P305)

If the steam pressure input to a density-compensated steam flow instrument fails high, the associated flow rate indication will...

A. decrease, because the density input has decreased.

B. increase, because the density input has decreased.

C. decrease, because the density input has increased.

D. increase, because the density input has increased.

ANSWER: D.

TOPIC: 291002
KNOWLEDGE: K1.02 [2.4/2.5]
QID: B4604 (P4603)

A main steam flow rate differential pressure detector was properly calibrated to produce a main steam flow rate indication of 500,000 lbm/hr with the following initial input conditions:

Detector high pressure input = 1,000 psia
Detector low pressure input = 950 psia

The current detector input conditions are as follows:

Detector high pressure input = 985 psia
Detector low pressure input = 935 psia

Assume that the detector and associated circuitry do not have steam density compensation. Also assume that the main steam quality and volumetric flow rate do not change.

The current main steam flow rate indication is _____ 500,000 lbm/hr; and the current main steam flow rate is _____ 500,000 lbm/hr.

A. equal to; greater than

B. less than; greater than

C. equal to; less than

D. greater than; less than

ANSWER: C.

TOPIC: 291002
KNOWLEDGE: K1.02 [2.4/2.5]
QID: B4704 (P4703)

A nuclear power plant is initially operating with the following main steam parameter values:

Main steam pressure = 1,000 psia
Main steam flow rate = 500,000 lbm/hr

Main steam pressure decreases and stabilizes at 950 psia.

Assume 100 percent quality saturated steam and that main steam volumetric flow rate is the same before and after the pressure change.

Which one of the following is the approximate mass flow rate of main steam after the pressure change?

A. 528,000 lbm/hr

B. 500,000 lbm/hr

C. 472,000 lbm/hr

D. 444,000 lbm/hr

ANSWER: C.

TOPIC: 291002
KNOWLEDGE: K1.04 [2.9/3.1]
QID: B8

A leak develops in the high-pressure side of a flow detector. What effect does the leak have on the affected flow indication?

A. The measured ΔP will decrease, causing indicated flow to decrease.

B. The measured ΔP will decrease, causing indicated flow to increase.

C. The measured ΔP will increase, causing indicated flow to decrease.

D. The measured ΔP will increase, causing indicated flow to increase.

ANSWER: A.

TOPIC: 291002
KNOWLEDGE: K1.04 [2.9/3.1]
QID: B211

A differential pressure (D/P) cell is being used to measure flow rate in a cooling water system. Flow rate is indicating 75 percent of scale. If the D/P cell diaphragm ruptures, <u>indicated</u> flow rate will...

A. decrease, because low D/P is sensed.

B. decrease, because high D/P is sensed.

C. increase, because low D/P is sensed.

D. increase, because high D/P is sensed.

ANSWER: A.

TOPIC: 291002
KNOWLEDGE: K1.04 [2.9/3.1]
QID: B307 (P307)

A differential pressure flow detector is connected to a calibrated orifice in a cooling water system. Which one of the following will cause indicated volumetric flow rate to be lower than actual volumetric flow rate?

A. System pressure decreases.

B. The orifice erodes over time.

C. Debris becomes lodged in the orifice.

D. A leak develops in the low pressure sensing line.

ANSWER: B.

TOPIC: 291002
KNOWLEDGE: K1.04 [2.9/3.1]
QID: B707 (P706)

Flow rate is being measured using a differential pressure flow detector and a calibrated orifice. If actual flow rate remains constant, which one of the following will cause indicated flow rate to be higher than actual flow rate?

A. The flow detector equalizing valve is inadvertently opened.

B. A leak develops in the high pressure sensing line.

C. Debris becomes lodged in the orifice.

D. The orifice erodes over time.

ANSWER: C.

TOPIC: 291002
KNOWLEDGE: K1.04 [2.9/3.1]
QID: B1006

Which one of the following will cause indicated liquid flow rate to be higher than actual flow rate when using a differential pressure (D/P) flow detector with a calibrated orifice?

A. System pressure decreases.

B. The detector diaphragm ruptures.

C. Debris becomes lodged in the orifice.

D. The pressure surrounding the D/P detector housing decreases.

ANSWER: C.

TOPIC: 291002
KNOWLEDGE: K1.04 [2.9/3.1]
QID: B1506 (P1205)

If the orifice in a differential pressure (D/P) flow sensor erodes such that the orifice opening becomes larger, indicated flow rate will _____ due to a _____ D/P across the orifice. (Assume actual flow rate remains the same.)

A. increase; larger

B. increase; smaller

C. decrease; larger

D. decrease; smaller

ANSWER: D.

TOPIC: 291002
KNOWLEDGE: K1.04 [2.9/3.1]
QID: B1607

A flow instrument for an operating cooling water system was calibrated with the differential pressure flow detector equalizing valve slightly open. If the valve is subsequently closed, flow indication will...

A. decrease and stabilize above 0 gpm.

B. decrease and stabilize at 0 gpm.

C. increase and stabilize at the actual flow rate.

D. increase and stabilize above the actual flow rate.

ANSWER: D.

TOPIC: 291002
KNOWLEDGE: K1.04 [2.9/3.1]
QID: B2310 (P2305)

An orifice is being used in an operating cooling water system to measure flow rate. Which one of the following will cause the differential pressure sensed across the orifice to decrease?

A. System pressure decreases.

B. System flow rate decreases.

C. Debris becomes lodged in the orifice.

D. A leak develops in the low pressure sensing line.

ANSWER: B.

TOPIC: 291002
KNOWLEDGE: K1.05 [3.1/3.1]
QID: B607 (P8)

How will flow rate indication be affected if the equalizing valve for the associated differential pressure detector is fully opened?

A. Increase temporarily, and then return to initial value.

B. Decrease temporarily, and then return to initial value.

C. Increase to the maximum value.

D. Decrease to the minimum value.

ANSWER: D.

TOPIC: 291002
KNOWLEDGE: K1.05 [3.1/3.1]
QID: B608 (P607)

The flow rate of water passing through a venturi can be determined by measuring the...

A. differential pressure of the water as it passes through the venturi.

B. change in the velocity of the water as it passes through the venturi.

C. linear displacement of a metering plug installed in the throat of the venturi.

D. rotation rate of a paddle wheel-type device installed in the throat of the venturi.

ANSWER: A.

TOPIC: 291002
KNOWLEDGE: K1.05 [3.1/3.1]
QID: B708 (P705)

A steam flow measuring instrument uses density compensation and square root compensation to convert the differential pressure across a flow element to flow rate in lbm/hr.

The purpose of square root compensation in this flow measuring instrument is to convert _____ to _____.

A. volumetric flow rate; mass flow rate

B. volumetric flow rate; differential pressure

C. differential pressure; mass flow rate

D. differential pressure; volumetric flow rate

ANSWER: D.

TOPIC: 291002
KNOWLEDGE: K1.05 [3.1/3.1]
QID: B908

Refer to the drawing of a pipe elbow (top view) in an operating water system (see figure below).

At which one of the following locations is the lowest pressure sensed? (Assume a constant pipe diameter and zero head loss in this section of pipe.)

A. Point A

B. Point B

C. Point C

D. Point D

ANSWER: B.

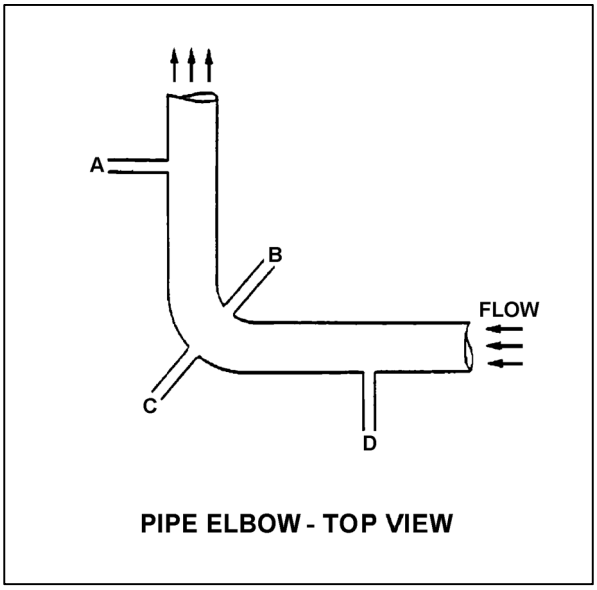

TOPIC: 291002
KNOWLEDGE: K1.05 [3.1/3.1]
QID: B1007 (P2807)

Refer to the drawing of a pipe elbow (top view) in an operating water system (see figure below).

At which one of the following locations is the highest pressure sensed? (Assume a constant pipe diameter and zero head loss in this section of pipe.)

A. Point A

B. Point B

C. Point C

D. Point D

ANSWER: C.

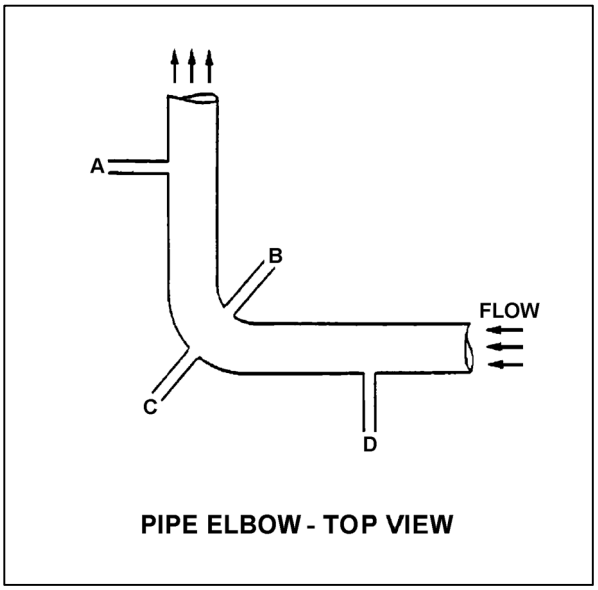

TOPIC: 291002
KNOWLEDGE: K1.05 [3.1/3.1]
QID: B1108

If the flow rate through a differential pressure (D/P) detector flow nozzle doubles, by what factor would the D/P increase?

A. $\sqrt{2}$

B. 2

C. 4

D. 8

ANSWER: C.

TOPIC: 291002
KNOWLEDGE: K1.05 [3.1/3.1]
QID: B1307

Flow rate in a cooling water system, measured using a differential pressure (D/P) detector, indicates 100 gpm at a D/P of 30 psid. If indicated flow rate increases to 150 gpm, what D/P is being sensed by the detector?

A. 36.7 psid

B. 37.5 psid

C. 66.7 psid

D. 67.5 psid

ANSWER: D.

TOPIC: 291002
KNOWLEDGE: K1.05 [3.1/3.1]
QID: B1408 (P1906)

Refer to the drawing of a pipe elbow (top view) in an operating water system (see figure below).

At which one of the following pairs of connection points will the greatest differential pressure be sensed? (Assume a constant pipe diameter and zero head loss in this section of pipe.)

A. Points A and B

B. Points B and C

C. Points C and D

D. Points D and A

ANSWER: B.

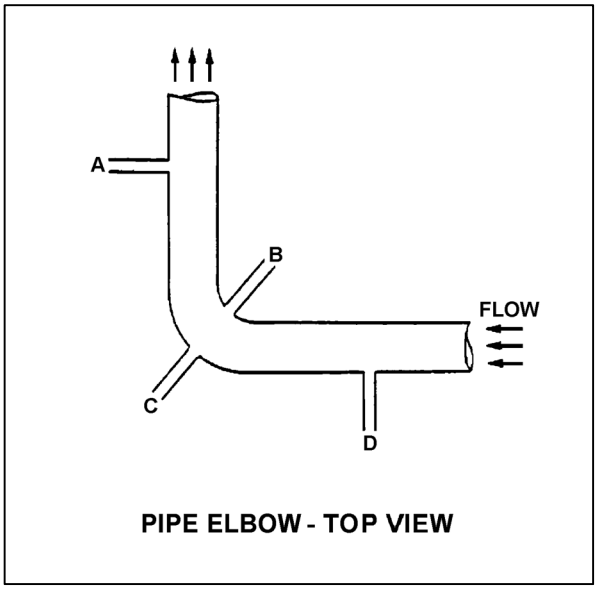

TOPIC: 291002
KNOWLEDGE: K1.05 [3.1/3.1]
QID: B1608 (P1608)

Refer to the drawing of a horizontal pipe elbow (top view) in an operating water system (see figure below).

Three separate differential pressure flow detectors are connected to taps A, B, C, and D as follows:

Detector	Taps
X	A and D
Y	B and D
Z	C and D

Assuming zero head loss in this section of pipe, how will the detectors be affected if tap D ruptures?

A. All detectors will fail low.

B. All detectors will fail high.

C. Two detectors will fail low and one will fail high.

D. Two detectors will fail high and one will fail low.

ANSWER: A.

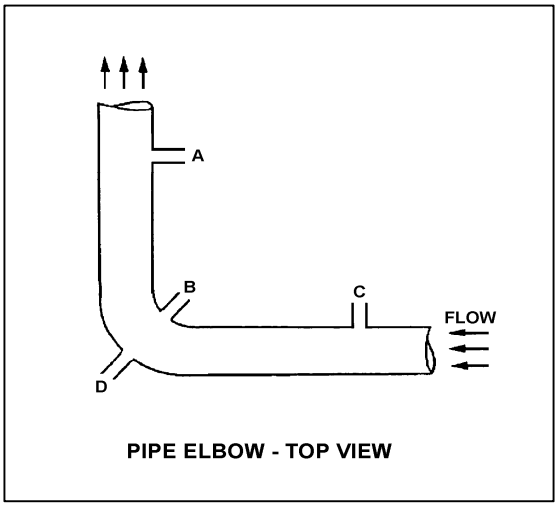

TOPIC: 291002
KNOWLEDGE: K1.05 [3.1/3.1]
QID: B1773 (P1873)

Water is flowing through each of the following devices. Which one of the devices will produce an outlet pressure that is greater than the inlet pressure?

A. Convergent nozzle

B. Divergent nozzle

C. Orifice

D. Flow restrictor

ANSWER: B.

TOPIC: 291002
KNOWLEDGE: K1.05 [3.1/3.1]
QID: B1905 (P907)

A differential pressure (D/P) detector is being used with a venturi to measure main steam flow rate. With a steam flow rate of 5×10^6 lbm/hr, the measured D/P is 40 psid.

If steam flow changes such that the current D/P is 30 psid, what is the approximate current steam flow rate? (Assume that main steam pressure at the inlet of the venturi remains constant.)

A. 2.1×10^6 lbm/hr

B. 3.5×10^6 lbm/hr

C. 3.7×10^6 lbm/hr

D. 4.3×10^6 lbm/hr

ANSWER: D.

TOPIC: 291002
KNOWLEDGE: K1.05 [3.1/3.1]
QID: B1907 (P1007)

Refer to the drawing of a pipe elbow used for flow measurement in a cooling water system (see figure below).

A differential pressure (D/P) flow detector is connected to instrument lines A and B.

If instrument line A develops a leak, indicated flow rate will _____ due to a _____ measured D/P.

A. increase; larger

B. increase; smaller

C. decrease; larger

D. decrease; smaller

ANSWER: D.

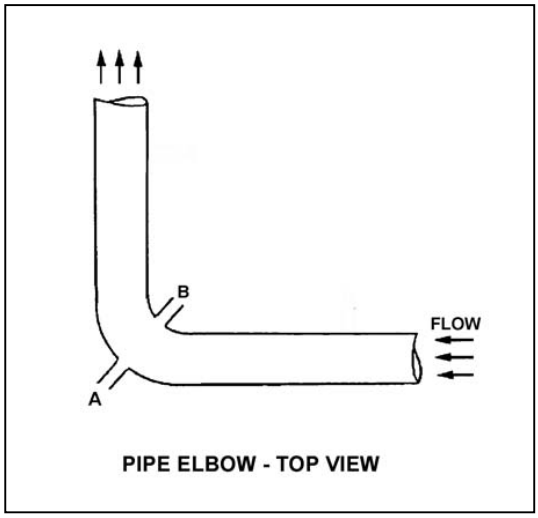

TOPIC: 291002
KNOWLEDGE: K1.05 [3.1/3.1]
QID: B2112

A cooling water system is operating at a steady-state flow rate of 500 gpm with 60 psid across the flow transmitter venturi. If cooling water flow rate is increased to 1000 gpm, differential pressure across the flow transmitter venturi will be approximately...

A. 85 psid.

B. 120 psid.

C. 240 psid.

D. 480 psid.

ANSWER: C.

TOPIC: 291002
KNOWLEDGE: K1.05 [3.1/3.1]
QID: B2209 (P2107)

Refer to the drawing of a pipe elbow used for flow measurement in a cooling water system (see figure below).

A differential pressure (D/P) flow detector is connected to instrument lines A and B.

If instrument line B develops a leak, indicated flow rate will _____ due to a _____ measured D/P.

A. increase; larger

B. increase; smaller

C. decrease; larger

D. decrease; smaller

ANSWER: A.

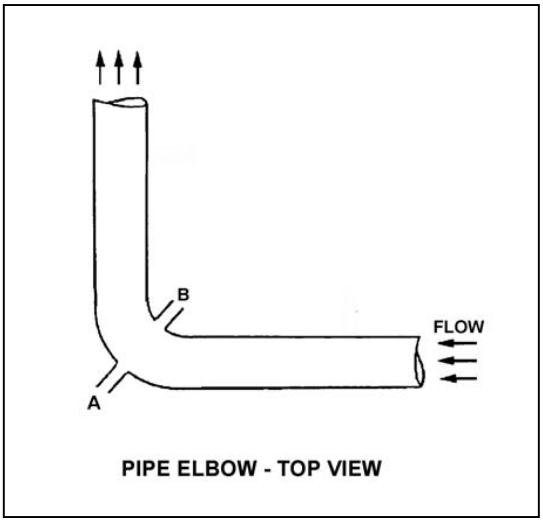

TOPIC: 291002
KNOWLEDGE: K1.05 [3.1/3.1]
QID: B2307 (P2307)

Refer to the drawing of a horizontal pipe elbow (top view) in an operating water system (see figure below). Three separate bellows differential pressure flow detectors are connected to taps A, B, C, and D as follows:

Detector	Taps
X	A and D
Y	B and D
Z	C and D

Assume that water is incompressible and there is no head loss in this section of pipe. How will the detectors be affected if system flow rate remains the same while system pressure increases from 1000 psig to 1200 psig?

A. All detectors will indicate higher flow.

B. Only two detectors will indicate higher flow.

C. Only one detector will indicate higher flow.

D. Detector indication will not change.

ANSWER: D.

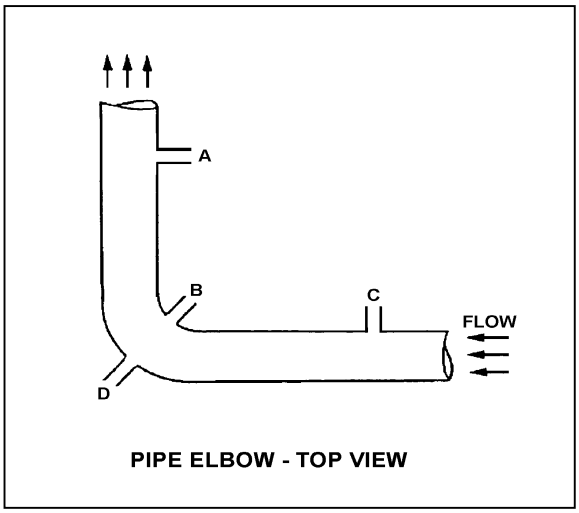

TOPIC: 291002
KNOWLEDGE: K1.05 [3.1/3.1]
QID: B2508 (P2507)

A differential pressure detector is being used with an orifice plate to measure water flow rate through a pipe. When the flow detector was last calibrated, the following parameters were observed:

Upstream Pressure = 125 psig
Downstream Pressure = 116 psig

Actual Flow Rate = 100 gpm
Indicated Flow Rate = 100 gpm

Significant erosion of the orifice has occurred since the calibration such that actual flow rate through the orifice has increased to 120 gpm while the upstream and downstream pressures have changed to 110 psig and 106 psig respectively.

What is the approximate flow rate that is currently indicated?

A. 44 gpm

B. 67 gpm

C. 81 gpm

D. 120 gpm

ANSWER: B.

TOPIC: 291002
KNOWLEDGE: K1.05 [3.1/3.1]
QID: B2607

A cooling water system is operating at a steady-state flow rate of 400 gpm with 60 psid across the flow transmitter venturi. If cooling water flow rate is increased to 600 gpm, differential pressure across the flow transmitter venturi will be approximately...

A. 73 psid.

B. 90 psid.

C. 114 psid.

D. 135 psid.

ANSWER: D.

TOPIC: 291002
KNOWLEDGE: K1.05 [3.1/3.1]
QID: B2807

Refer to the drawing of a pipe elbow used for flow measurement in a cooling water system (see figure below). A differential pressure (D/P) flow detector is properly connected to instrument lines A and C. Connections B and D are capped.

If instrument line A develops a leak, indicated flow rate will _____ due to a _____ measured D/P.

A. increase; larger

B. increase; smaller

C. decrease; larger

D. decrease; smaller

ANSWER: A.

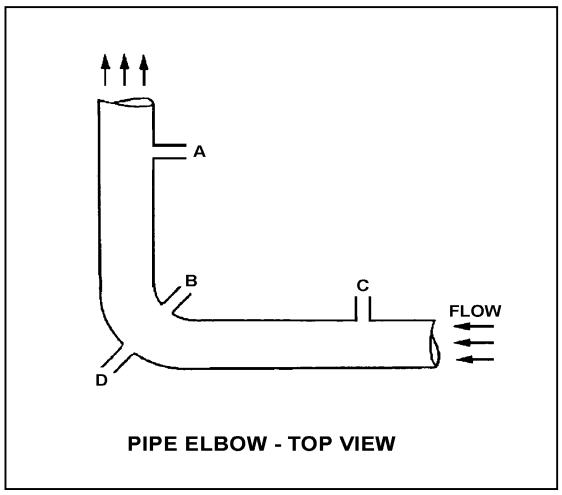

TOPIC: 291002
KNOWLEDGE: K1.05 [3.1/3.1]
QID: B3108 (P2905)

Refer to the drawing of a horizontal pipe elbow (top view) in an operating water system (see figure below).

Three separate bellows-type differential pressure flow detectors are connected to taps A, B, C, and D as follows:

Detector	Taps
X	A and D
Y	B and D
Z	C and D

Assuming zero head loss in this section of pipe, how will the detectors be affected if tap B experiences a significant leak? (Assume water system pressure does not change.)

A. All detectors will fail low.

B. All detectors will fail high.

C. Only one detector will fail, and it will fail low.

D. Only one detector will fail, and it will fail high.

ANSWER: D.

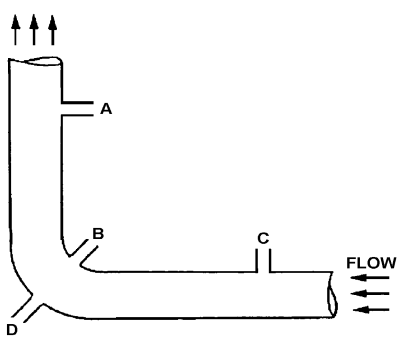

PIPE ELBOW - TOP VIEW

TOPIC: 291002
KNOWLEDGE: K1.05 [3.1/3.1]
QID: B3608 (P3605)

A steam flow measuring instrument uses density compensation and square root extraction to convert the differential pressure across the flow element to flow rate in lbm/hr.

The purpose of density compensation in this flow measuring instrument is to convert _____ to _____.

A. volumetric flow rate; mass flow rate

B. volumetric flow rate; differential pressure

C. differential pressure; mass flow rate

D. differential pressure; volumetric flow rate

ANSWER: A.

TOPIC: 291002
KNOWLEDGE: K1.05 [3.1/3.1]
QID: B3807 (P3807)

Refer to the drawing of a differential pressure manometer (see figure below).

The manometer is filled with water and installed across an orifice in a ventilation duct to determine the rate of air flow. The manometer is currently indicating a water level difference of 16 inches at an air flow rate of 300 ft^3/min.

Which one of the following will be the approximate rate of air flow when the manometer indicates a water level difference of 4 inches?

A. 75 ft^3/min.

B. 125 ft^3/min.

C. 150 ft^3/min.

D. 175 ft^3/min.

ANSWER: C.

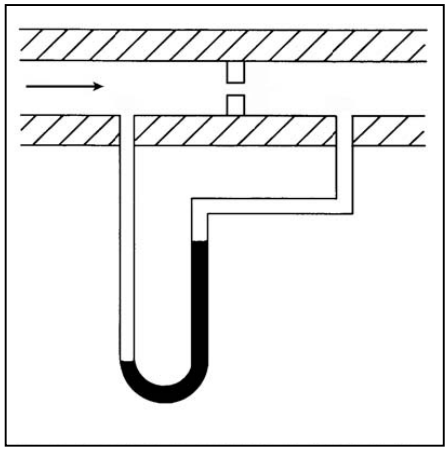

TOPIC: 291002
KNOWLEDGE: K1.05 [3.1/3.1]
QID: B4005 (P4003)

A differential pressure detector is being used with an orifice plate to measure water flow rate through a pipe. When the flow instrument was last calibrated, the following parameters were observed:

Upstream Pressure	= 125 psig	Actual Flow Rate	= 100 gpm
Downstream Pressure	= 116 psig	Indicated Flow Rate	= 100 gpm

Since the calibration, debris has collected in the orifice such that the actual flow rate through the orifice has decreased to 80 gpm while the upstream and downstream pressures have changed to 135 psig and 110 psig, respectively.

What is the approximate flow rate that is currently indicated by the flow instrument?

A. 125 gpm

B. 133 gpm

C. 156 gpm

D. 167 gpm

ANSWER: D.

TOPIC: 291002
KNOWLEDGE: K1.05 [3.1/3.1]
QID: B4605 (P4604)

Refer to the drawing of a differential pressure manometer (see figure below).

The manometer is filled with water and installed across an orifice in a ventilation duct to determine the rate of air flow. The manometer is currently indicating a water level difference of 8 inches at an air flow rate of 300 cubic feet per minute (ft^3/min).

Which one of the following will be the approximate air flow rate when the manometer indicates a water level difference of 4 inches?

A. 75 ft^3/min

B. 150 ft^3/min

C. 188 ft^3/min

D. 212 ft^3/min

ANSWER: D.

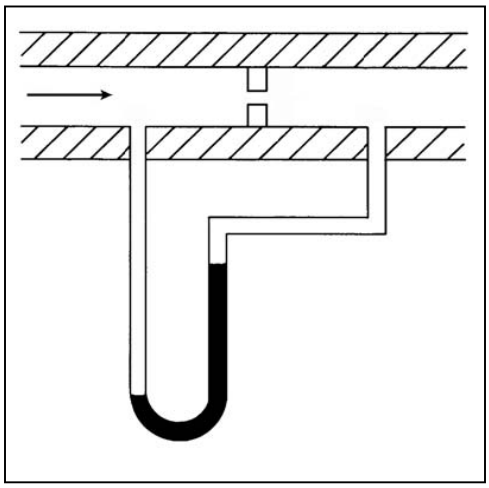

TOPIC: 291002
KNOWLEDGE: K1.06 [2.8/2.9]
QID: B11

Refer to the drawing of a reactor vessel (RV) differential pressure (D/P) level detection system (see figure below).

What is the reason for the reference leg being connected to the RV instead of being connected to a water source independent of the RV?

A. To provide a vent path to prevent collapse of the reference leg during a rapid RV depressurization

B. To remove the need for density compensation of the level signal by keeping the reference leg at the same temperature as the variable leg

C. To make the indicated level proportional to the square root of the D/P pressure between the reference and variable legs for all reactor pressures

D. To provide compensation for the RV pressure exerted on the variable leg

ANSWER: D.

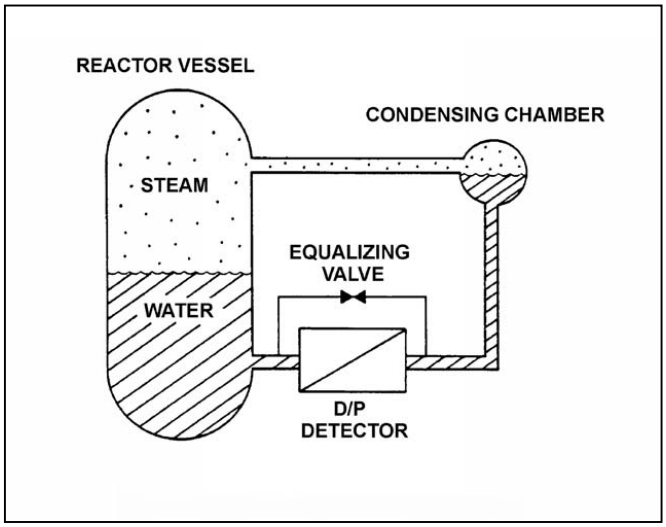

TOPIC: 291002
KNOWLEDGE: K1.06 [2.8/2.9]
QID: B209

Refer to the drawing of a water storage tank with a differential pressure (D/P) level detector (see figure below).

The level detector is being used in a level control system that was calibrated to maintain tank level at 80 percent at the current water temperature of 100°F. If the water temperature gradually decreases and stabilizes at 70°F, the level control system will cause actual tank level to...

A. remain at 80 percent.

B. increase and stabilize above 80 percent.

C. oscillate around 80 percent.

D. decrease and stabilize below 80 percent.

ANSWER: D.

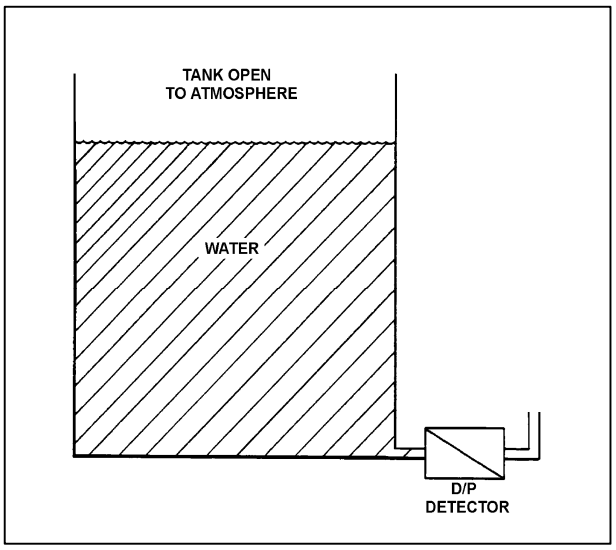

TOPIC: 291002
KNOWLEDGE: K1.06 [2.8/2.9]
QID: B510 (P14)

Refer to the drawing of a water storage tank with two differential pressure (D/P) level indicators (see figure below).

Indicator 1 was calibrated at 200°F and indicator 2 was calibrated at 100°F. If tank water temperature is 150°F, then...

A. indicator 1 will read greater than indicator 2.

B. indicator 2 will read greater than indicator 1.

C. indicators 1 and 2 will read the same.

D. both indicators will be inaccurate, but it is impossible to predict which indicator will read greater.

ANSWER: A.

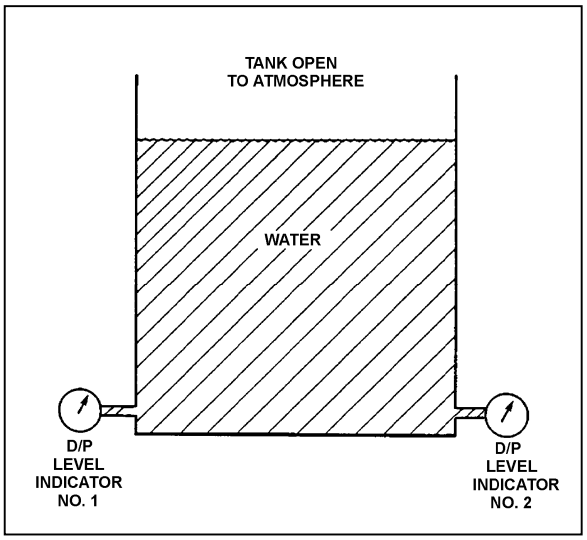

TOPIC: 291002
KNOWLEDGE: K1.06 [2.8/2.9]
QID: B709

Refer to the drawing of a water storage tank with two differential pressure (D/P) level indicators (see figure below).

Indicator 1 was calibrated at 120°F and indicator 2 was calibrated at 180°F. If tank water temperature is 150°F, then indicator...

A. 1 will read greater than indicator 2.

B. 2 will read greater than indicator 1.

C. 1 and 2 readings will increase by the same amount.

D. 1 and 2 readings will decrease by the same amount.

ANSWER: B.

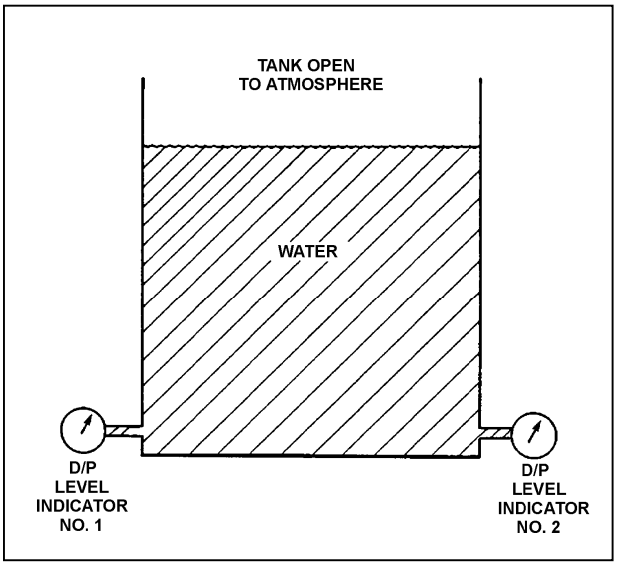

TOPIC: 291002
KNOWLEDGE: K1.06 [2.8/2.9]
QID: B809 (P808)

Refer to the drawing of a water storage tank with a differential pressure (D/P) level detection system (see figure below).

The level detector is being used in a level control system that was calibrated to maintain tank level at 80 percent when the tank water temperature was 100°F. If tank water temperature gradually increases and stabilizes at 150°F, the level control system will cause actual tank level to...

A. remain stable at 80 percent.

B. increase and stabilize above 80 percent.

C. oscillate and then stabilize at 80 percent.

D. decrease and stabilize below 80 percent.

ANSWER: B.

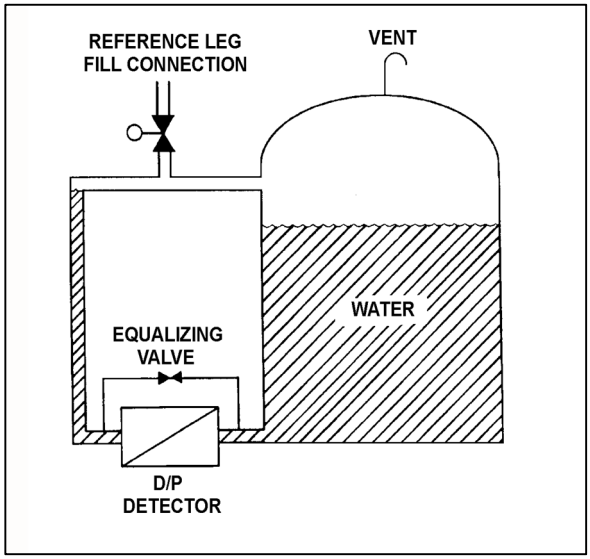

TOPIC: 291002
KNOWLEDGE: K1.06 [2.8/2.9]
QID: B909 (P208)

Refer to the drawing of a water storage tank with a differential pressure (D/P) level detector (see figure below).

The associated level instrument was calibrated with the water storage tank at 100°F. If mass in the tank remains constant and the water temperature increases to 120°F, the indicated level will...

A. remain the same although actual level increases.

B. increase but remain less than actual level.

C. decrease in direct proportion to the temperature rise.

D. increase in direct proportion to the temperature rise.

ANSWER: A.

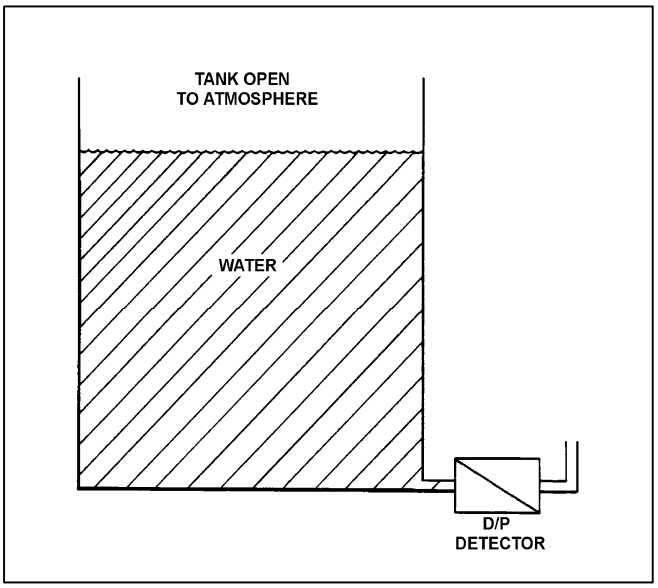

TOPIC: 291002
KNOWLEDGE: K1.06 [2.8/2.9]
QID: B1209

Two differential pressure level transmitters are installed on a large water storage tank. Transmitter I was calibrated at 100°F and transmitter II was calibrated at 200°F water temperature.

Which transmitter will indicate a higher level?

A. Transmitter I below 150°F, transmitter II above 150°F.

B. Transmitter II below 150°F, transmitter I above 150°F.

C. Transmitter I at all water temperatures.

D. Transmitter II at all water temperatures.

ANSWER: D.

TOPIC: 291002
KNOWLEDGE: K1.06 [2.8/2.9]
QID: B1409 (P1607)

Refer to the drawing of a water storage tank with a differential pressure (D/P) level detector (see figure below).

The associated level instrument was calibrated with the water storage tank at 120°F. If the mass in the tank remains constant and the water temperature decreases to 100°F, the indicated level will...

A. remain the same although actual level decreases.

B. remain the same although actual level increases.

C. increase in direct proportion to the temperature decrease.

D. decrease in direct proportion to the temperature decrease.

ANSWER: A.

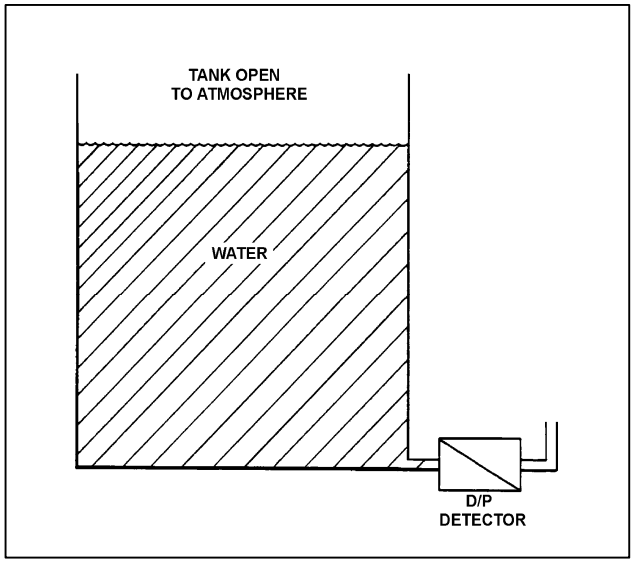

TOPIC: 291002
KNOWLEDGE: K1.06 [2.8/2.9]
QID: B1706 (P1706)

Refer to the drawing of a water storage tank with two differential pressure (D/P) level indicators (see figure below).

Two D/P level indicators are installed on a large water storage tank. Indicator No. 1 was calibrated at 200°F water temperature and indicator No. 2 was calibrated at 100°F water temperature.

Assuming both indicators are on scale, which indicator will indicate the lower level?

A. Indicator 1 at all water temperatures.

B. Indicator 2 at all water temperatures.

C. Indicator 1 below 150°F, indicator 2 above 150°F.

D. Indicator 2 below 150°F, indicator 1 above 150°F.

ANSWER: B.

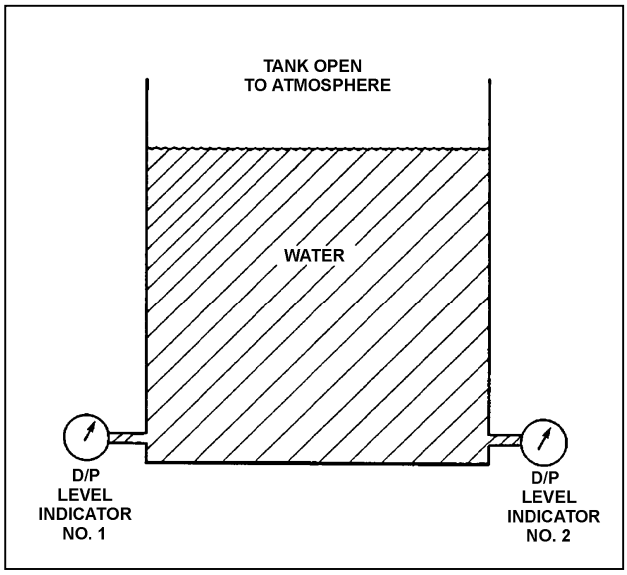

TOPIC: 291002
KNOWLEDGE: K1.06 [2.8/2.9]
QID: B1809

Refer to the drawing of a water storage tank with a differential pressure (D/P) level detector that was recently calibrated at a tank water temperature of 80°F (see figure below).

If the mass of the water in the tank remains the same while the tank water temperature is raised from 80°F to 150°F, the indicated level will...

A. remain equal to actual level.

B. increase, due to the expansion of the water.

C. remain the same.

D. decrease, due to the expansion of the water.

ANSWER: C.

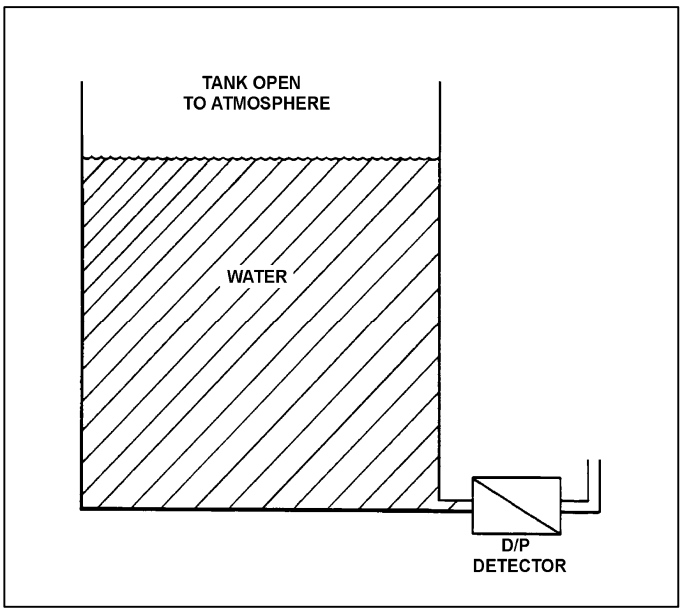

TOPIC: 291002
KNOWLEDGE: K1.06 [2.8/2.9]
QID: B2210

Refer to the drawing of a water storage tank with a differential pressure (D/P) level detector (see figure below).

The level detector is being used in a level control system that was calibrated to maintain tank level at 80 percent at the current water temperature of 70°F. If the water temperature gradually increases and stabilizes at 90°F, the level control system will cause actual tank level to...

A. remain at 80 percent.

B. increase and stabilize above 80 percent.

C. oscillate around 80 percent.

D. decrease and stabilize below 80 percent.

ANSWER: B.

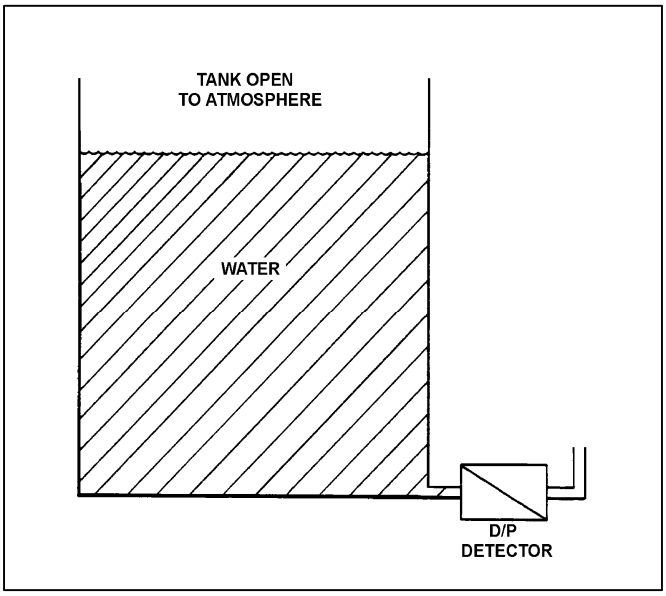

TOPIC: 291002
KNOWLEDGE: K1.06 [2.8/2.9]
QID: B2408 (P2108)

Refer to the drawing of a water storage tank with two differential pressure (D/P) level indicators (see figure below).

Indicator 1 was calibrated at 180°F and indicator 2 was calibrated at 120°F. If tank water temperature is 150°F, then indicator...

A. 1 will read greater than indicator 2, and greater than actual water level.

B. 1 will read greater than indicator 2, and less than actual water level.

C. 2 will read greater than indicator 1, and greater than actual water level.

D. 2 will read greater than indicator 1, and less than actual water level.

ANSWER: A.

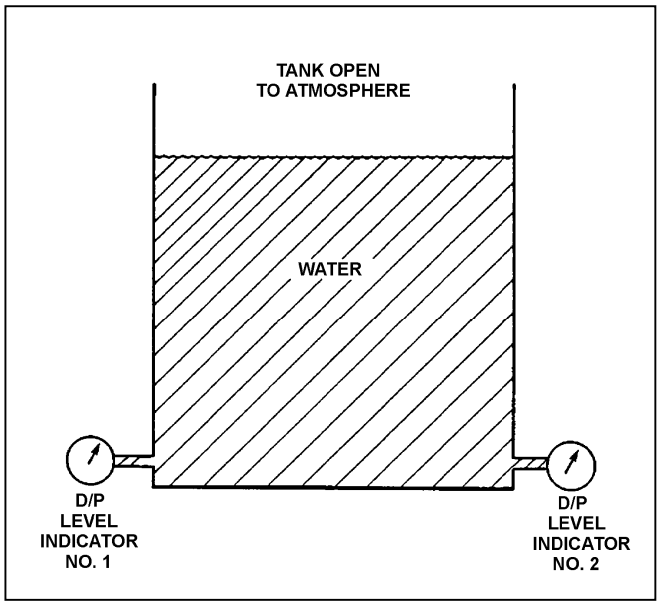

TOPIC: 291002
KNOWLEDGE: K1.06 [2.8/2.9]
QID: B2409

Refer to the drawing of a reactor vessel differential pressure (D/P) level detection system that was calibrated at 1,000 psia (see figure below).

A reactor vessel cooldown has resulted in a decrease in reactor vessel pressure from 1,000 psia to 500 psia over several hours. Without density compensation of the level instrumentation, at the end of the cooldown, reactor vessel level indication would indicate _____ than actual level because the density of the water in the _____ has changed significantly. (Assume the reference leg does not flash to steam.)

A. higher; reactor vessel

B. higher; reference leg

C. lower; reactor vessel

D. lower; reference leg

ANSWER: A.

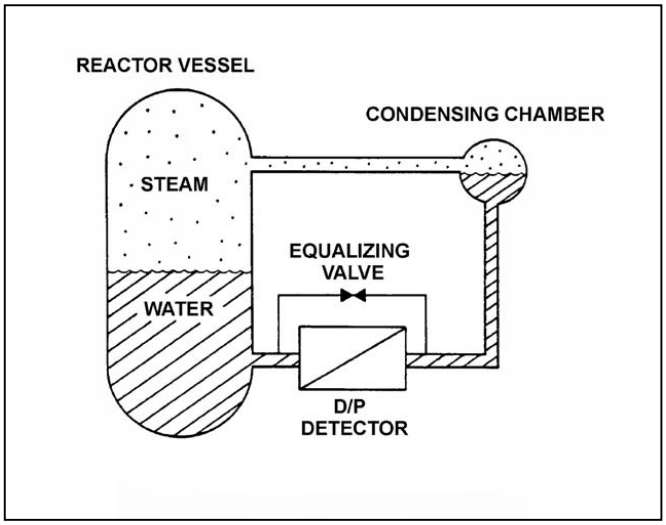

TOPIC: 291002
KNOWLEDGE: K1.06 [2.8/2.9]
QID: B2509

Refer to the drawing of a reactor vessel differential pressure (D/P) level detection system that was calibrated at 500 psia (see figure below).

A reactor vessel heatup has resulted in an increase in reactor vessel pressure from 500 psia to 1,000 psia over several hours. Without density compensation of the level instrumentation, at the end of the heatup, reactor vessel level indication would indicate _____ than actual level because the density of the water in the _____ has changed significantly.

A. higher; reactor vessel

B. higher; reference leg

C. lower; reactor vessel

D. lower; reference leg

ANSWER: C.

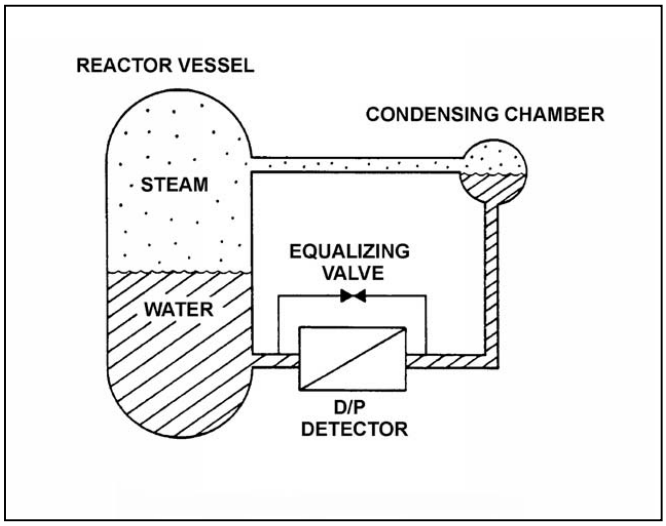

TOPIC: 291002
KNOWLEDGE: K1.06 [2.8/2.9]
QID: B3210

A reactor is currently shut down at 180°F. Reactor vessel (RV) level is being monitored using a differential pressure detector with a wet reference leg. The RV level instrument was calibrated at normal plant operating conditions.

The RV level instrument currently indicates _____ than actual RV level because, compared to the calibration conditions, there has been a significant change in the density of the fluid in the _____.

A. higher; reactor vessel

B. higher; reference leg

C. lower; reactor vessel

D. lower; reference leg

ANSWER: A.

TOPIC: 291002
KNOWLEDGE: K1.06 [2.8/2.9]
QID: B3508 (P911)

Refer to the drawing of a reactor vessel (RV) differential pressure (D/P) level detection system (see figure below) that was recently calibrated at normal operating conditions.

With the reactor shut down, RV pressure was inadvertently decreased from 1,000 psig to 500 psig in 5 minutes due to operator error. RV pressure was stabilized at 500 psig, but during the pressure decrease a small amount of water in the condensing chamber flashed to steam. Assume the reference leg water remained subcooled, except for the small amount of water that flashed to steam in the condensing chamber.

As a result of the small loss of condensing chamber water, RV level will indicate _____ than actual level; and as the condensing chamber refills, indicated level will _____.

A. higher; decrease and stabilize above the actual level

B. higher; decrease and stabilize below the actual level

C. lower; increase and stabilize above the actual level

D. lower; increase and stabilize below the actual level

ANSWER: A.

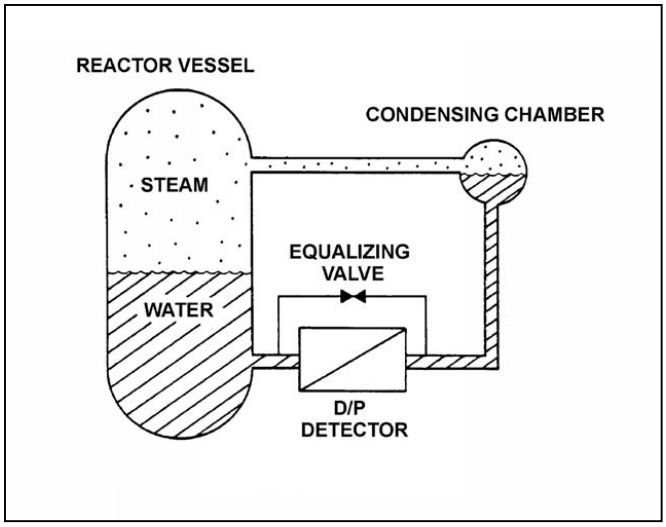

TOPIC: 291002
KNOWLEDGE: K1.06 [2.8/2.9]
QID: B4104

Refer to the drawing of a reactor vessel differential pressure (D/P) level detection system that was recently calibrated at normal operating conditions (see figure below). Assume that the associated reactor vessel level instrument does not use density compensation.

With the nuclear power plant shut down at reduced reactor vessel temperature and pressure, the reactor vessel level instrument will indicate _____ than actual water level; the D/P currently sensed by the D/P detector is _____ than the D/P for the same reactor vessel water level at normal operating conditions.

A. higher; smaller

B. higher; larger

C. lower; smaller

D. lower; larger

ANSWER: A.

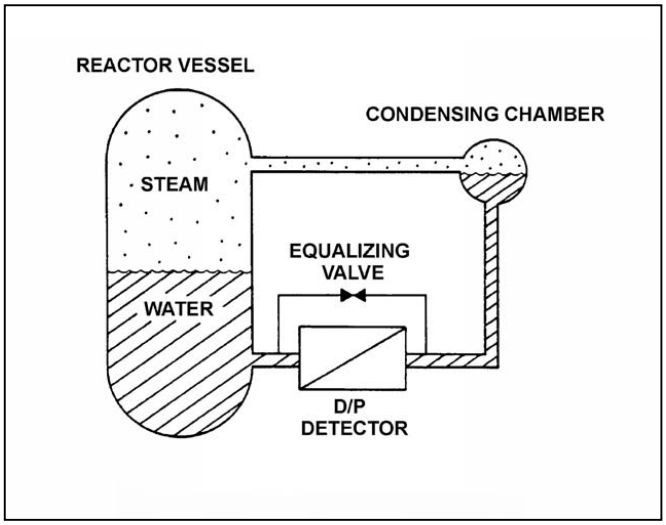

TOPIC: 291002
KNOWLEDGE: K1.06 [2.8/2.9]
QID: B4205 (P1907)

Refer to the drawing of a water storage tank with two differential pressure (D/P) level indicators (see figure below).

Indicator 1 was calibrated at 120°F and indicator 2 was calibrated at 180°F. If tank water temperature is currently 150°F, then indicator...

A. 1 will read greater than indicator 2, and greater than actual level.

B. 1 will read greater than indicator 2, and less than actual level.

C. 2 will read greater than indicator 1, and greater than actual level.

D. 2 will read greater than indicator 1, and less than actual level.

ANSWER: C.

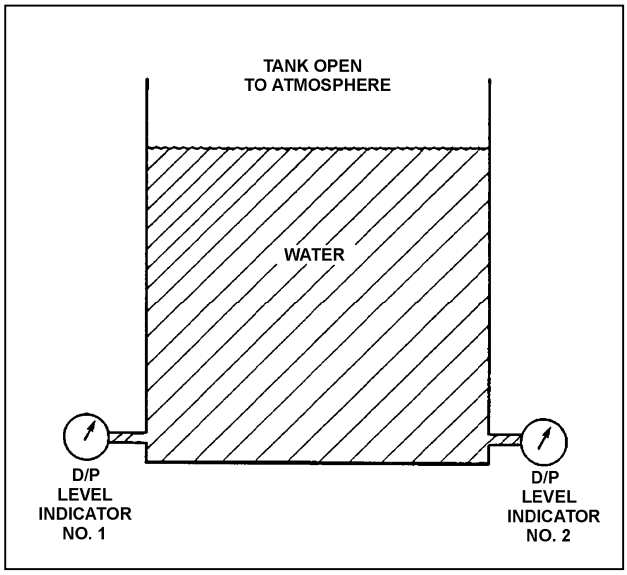

TOPIC: 291002
KNOWLEDGE: K1.06 [2.8/2.9]
QID: B4504

Refer to the drawing of a differential pressure (D/P) level detection system for a reactor vessel at normal operating temperature and pressure (see figure below).

A nuclear power plant uses several differential pressure detectors like the one below to provide multiple channels of reactor vessel water level indication. A hot channel was calibrated when the reactor vessel was at normal operating temperature. A cold channel was calibrated when the reactor vessel was at 160°F.

How will the level indications on the two channels compare when the reactor vessel is at normal operating temperature?

A. The cold channel will indicate higher than the hot channel, due to the difference in reference leg water density at the two calibration temperatures.

B. The cold channel will indicate lower than the hot channel, due to the difference in reference leg water density at the two calibration temperatures.

C. The cold channel will indicate higher than the hot channel, due to the difference in reactor vessel water density at the two calibration temperatures.

D. The cold channel will indicate lower than the hot channel, due to the difference in reactor vessel water density at the two calibration temperatures.

ANSWER: D.

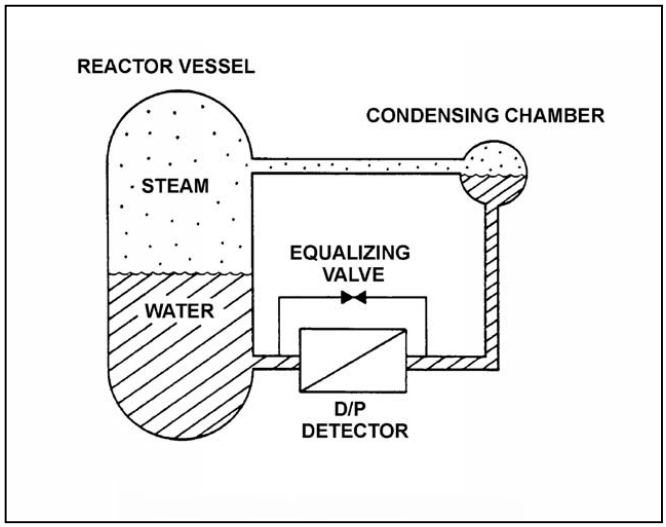

TOPIC: 291002
KNOWLEDGE: K1.06 [2.8/2.9]
QID: B5105

Refer to the drawing of a differential pressure (D/P) level detection system for a reactor vessel at normal operating temperature and pressure (see figure below).

A nuclear power plant uses several differential pressure detectors like the one below to provide multiple channels of reactor vessel water level indication. A hot channel was calibrated when the reactor vessel was at normal operating temperature. A cold channel was calibrated when the reactor vessel was at 160°F.

How will the level indications on the two channels compare when the reactor vessel is at 160°F?

A. The cold channel will indicate higher than the hot channel, due to the difference in reference leg water density at the two calibration temperatures.

B. The cold channel will indicate lower than the hot channel, due to the difference in reference leg water density at the two calibration temperatures.

C. The cold channel will indicate higher than the hot channel, due to the difference in reactor vessel water density at the two calibration temperatures.

D. The cold channel will indicate lower than the hot channel, due to the difference in reactor vessel water density at the two calibration temperatures.

ANSWER: D.

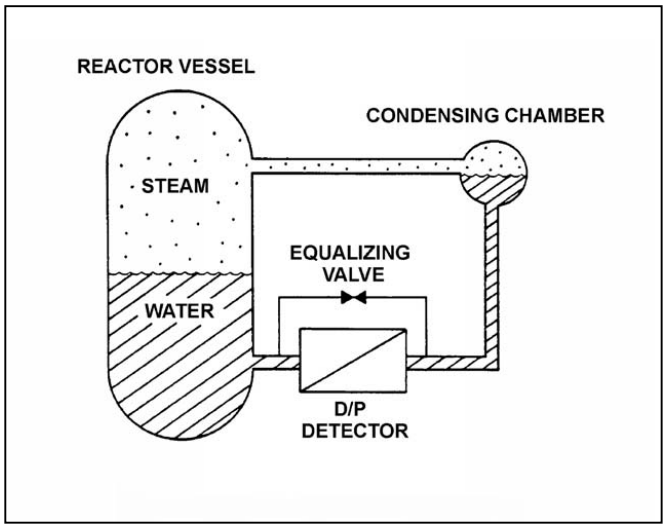

TOPIC: 291002
KNOWLEDGE: K1.06 [2.8/2.9]
QID: B6204

Refer to the drawing of a reactor vessel differential pressure (D/P) level detection system (see figure below).

With the reactor containing saturated water at 536°F, reactor vessel level indication is 40 feet. Assume that reference leg level and temperature do not change. Also, ignore the effect of steam density changes on level indication.

With no change in actual reactor vessel level, what will level indication be at 300°F (saturated)?

A. 32.7 feet

B. 35.8 feet

C. 45.2 feet

D. 48.9 feet

ANSWER: D.

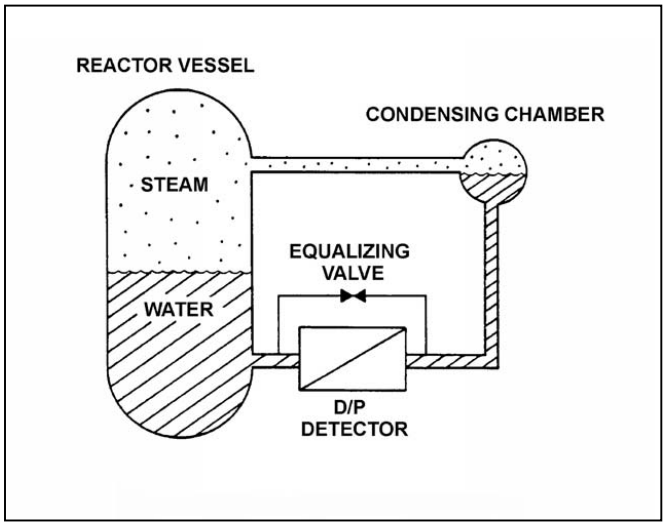

TOPIC: 291002
KNOWLEDGE: K1.07 [3.2/3.2]
QID: B155

Many reactor vessel water level instruments are designed with a condensing chamber in the reference leg. The purpose of the condensing chamber is to...

A. provide a source of makeup water to the reference leg during normal operations.

B. provide reference leg compensation for the reactor pressure exerted on the variable leg.

C. prevent reference leg flashing during a rapid depressurization of the reactor vessel.

D. ensure the reference leg temperature remains near the temperature of the water in the reactor vessel.

ANSWER: A.

TOPIC: 291002
KNOWLEDGE: K1.07 [3.2/3.2]
QID: B910 (P910)

Refer to the drawing of a water storage tank with a differential pressure (D/P) level detection system (see figure below).

The D/P sensed by the detector varies in the _____ direction as the temperature of the water in the tank if the _____ of the tank water is constant. (Assume reference leg and tank water temperatures are initially the same.)

A. same; level

B. inverse; level

C. same; mass

D. inverse; mass

ANSWER: A.

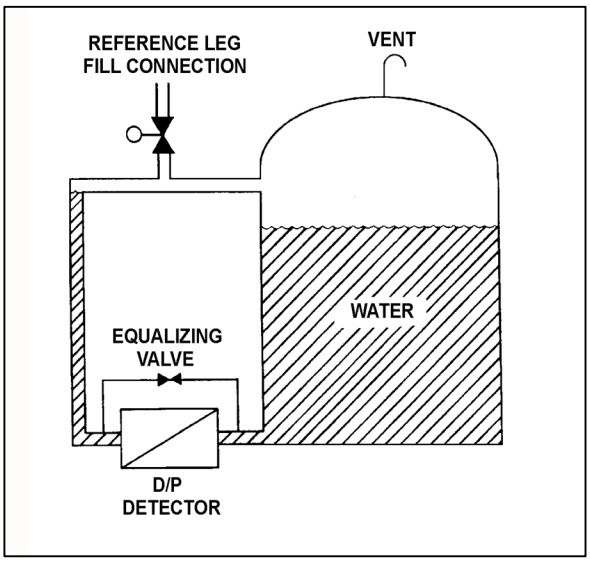

TOPIC: 291002
KNOWLEDGE: K1.07 [3.2/3.2]
QID: B1211 (P1807)

A cooling water system is cooling a lube oil heat exchanger. Cooling water system surge tank level is being measured using a differential pressure level detector that has been calibrated at the current water temperature in the tank. A leak in the heat exchanger results in lube oil collecting in the surge tank.

Assuming that the temperature of the contents in the surge tank does not change, indicated tank level will be _____ than actual tank level because lube oil is _____ than water.

A. higher; more dense

B. higher; less dense

C. lower; more dense

D. lower; less dense

ANSWER: D.

TOPIC: 291002
KNOWLEDGE: K1.07 [3.2/3.2]
QID: B1507 (P1107)

Refer to the drawing of a water storage tank with two tank differential pressure (D/P) level indicators (see figure below).

Two D/P level indicators are installed on a large water storage tank. Indicator 1 was calibrated at 100°F water temperature and indicator 2 was calibrated at 200°F water temperature.

Assuming both indicators are on scale, which indicator will indicate the lower level?

A. Indicator 1 at all water temperatures

B. Indicator 2 at all water temperatures

C. Indicator 1 below 150°F, indicator 2 above 150°F

D. Indicator 2 below 150°F, indicator 1 above 150°F

ANSWER: A.

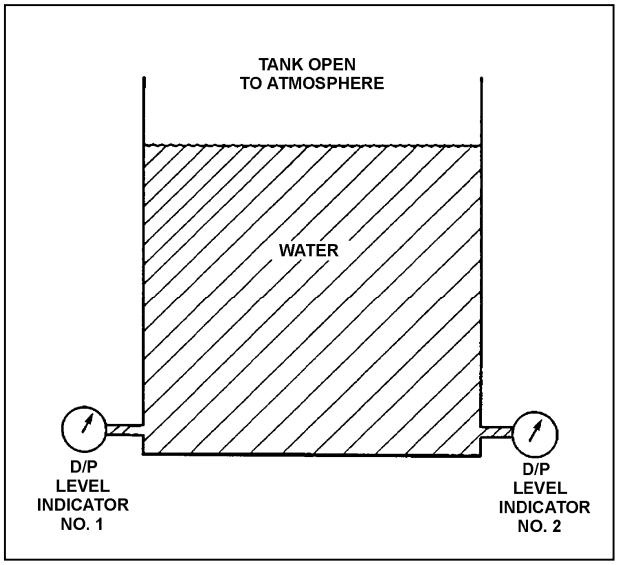

TOPIC: 291002
KNOWLEDGE: K1.07 [3.2/3.2]
QID: B3010 (P3008)

Refer to the drawing of a water storage tank with a differential pressure (D/P) level detection system (see figure below).

Assume the initial temperature of the reference leg and the water in the tank is 100°F, and that reference leg temperature does not change.

If the temperature of the water in the tank increases by 20°F, the D/P sensed by the detector will _____ as long as the water _____ is maintained constant.

A. increase; level

B. decrease; level

C. increase; mass

D. decrease; mass

ANSWER: A.

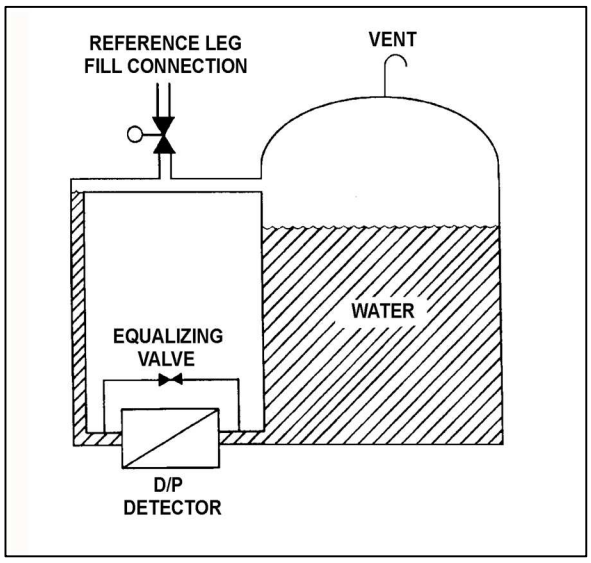

TOPIC: 291002
KNOWLEDGE: K1.07 [3.2/3.2]
QID: B5004

The downcomer region of a reactor vessel contains 40 feet of saturated water at 536°F. A reactor vessel water level detector has a pressure tap located at the bottom of the downcomer region. Approximately how much of the total pressure at the pressure tap is caused by the downcomer water?

A. 0.6 psi

B. 13.0 psi

C. 27.7 psi

D. 156.0 psi

ANSWER: B.

TOPIC: 291002
KNOWLEDGE: K1.07 [3.2/3.2]
QID: B5204

Refer to the drawing of a differential pressure (D/P) level detection system (see figure below) for a reactor vessel at normal operating temperature and pressure. The level detector has just been calibrated.

The high pressure side of the detector is connected to the _____; and if the equalizing valve is opened, the indicated reactor vessel level will be _____ than the actual level.

A. condensing chamber; lower

B. condensing chamber; higher

C. reactor vessel; lower

D. reactor vessel; higher

ANSWER: B.

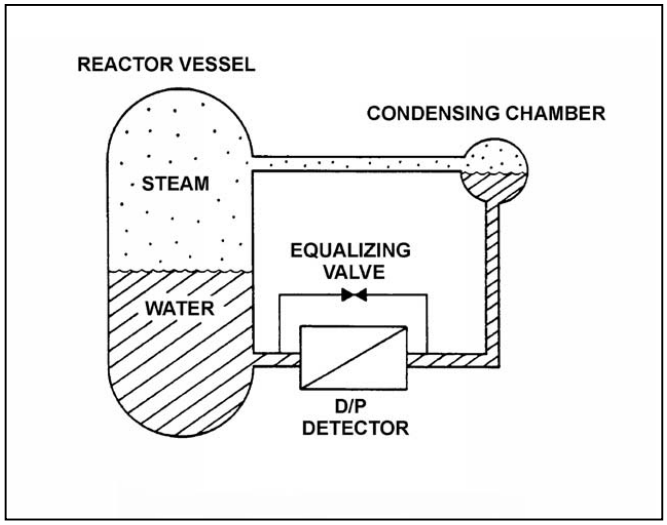

TOPIC: 291002
KNOWLEDGE: K1.07 [3.2/3.2]
QID: B6105 (P6104)

Refer to the drawing of a water storage tank with a differential pressure (D/P) level detection system (see figure below).

The D/P level detector was just calibrated and returned to operation with the following conditions:

- The reference leg contains 20 feet of water at 70°F.
- The tank contains 18 feet of water at 70°F.
- Tank level indication is 18 feet.

Assume the actual tank water level and the temperature of the water in the tank and reference leg do <u>not</u> change. Which one of the following will be the new tank level indication if the reference leg water level decreases to 18 feet?

A. 22 feet

B. 20 feet

C. 18 feet

D. 2 feet

ANSWER: B.

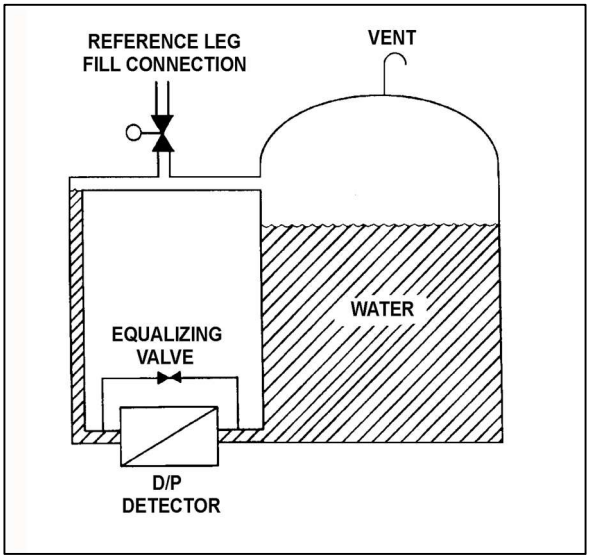

TOPIC: 291002
KNOWLEDGE: K1.07 [3.2/3.2]
QID: B6606 (P6604)

Refer to the drawing of a water storage tank with a differential pressure (D/P) level detection system (see figure below).

The water storage tank is 40 feet tall. The level detection system is calibrated to provide a level indication of 30 feet when the tank and reference leg levels are equal.

If the tank is completely filled with water, the tank level will indicate...

A. less than 30 feet.

B. 30 feet.

C. greater than 30 feet, but less than 40 feet.

D. 40 feet.

ANSWER: B.

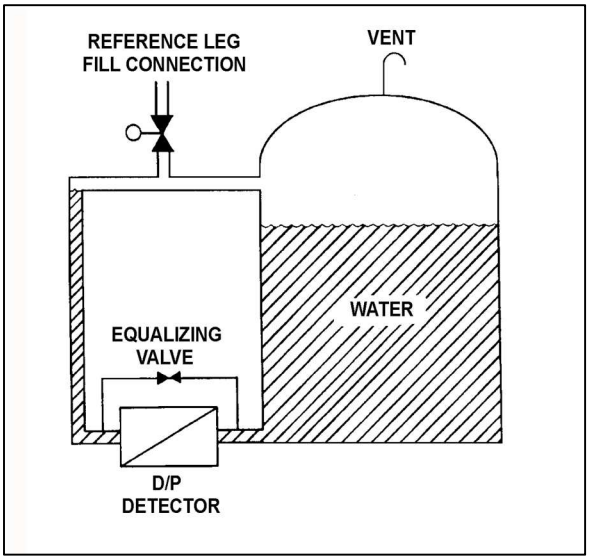

TOPIC: 291002
KNOWLEDGE: K1.07 [3.2/3.2]
QID: B6705 (P6704)

Refer to the drawing of a water storage tank with a differential pressure (D/P) level detection system (see figure below).

Assume that the initial temperature of the reference leg and the water in the tank is 100°F, and that reference leg temperature does not change.

If the temperature of the water in the tank increases by 20°F, the D/P sensed by the detector will _____ if the _____ of the water in the tank is constant.

A. decrease; level

B. decrease; mass

C. remain the same; level

D. remain the same; mass

ANSWER: D.

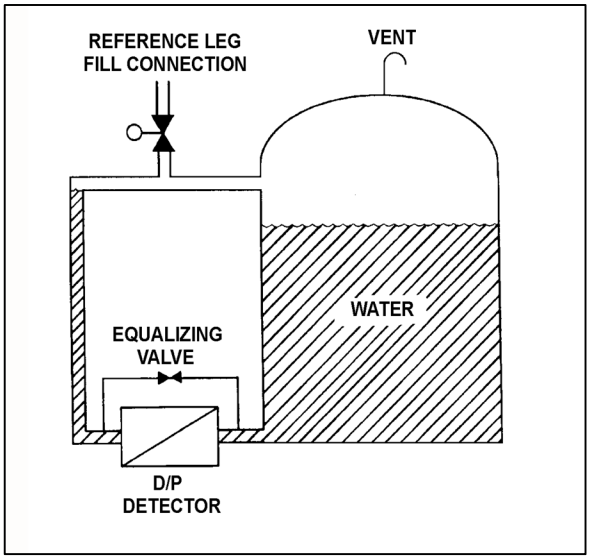

TOPIC: 291002
KNOWLEDGE: K1.07 [3.2/3.2]
QID: B7404 (P7404)

Refer to the drawing of a vented water storage tank with a differential pressure (D/P) level detection system (see figure below). The water in the tank and reference leg is at the same temperature.

The tank level indicator was just calibrated to indicate 0 percent when the tank is empty and 100 percent when the water level reaches the upper tap. The indicator's display range is 0 percent to 120 percent. The initial water level is as indicated in the figure.

If the tank water level slowly increases and stabilizes just below the top of the tank, the level indication will increase until…

A. the water level stabilizes, at which time the level indication will stabilize at 100 percent.

B. the water level stabilizes, at which time the level indication will stabilize at a value greater than 100 percent.

C. the water level reaches the upper tap, at which time the level indication will remain at 100 percent as the water level continues to increase.

D. the water level reaches the upper tap, at which time the level indication will continue to increase as the water level continues to increase.

ANSWER: C.

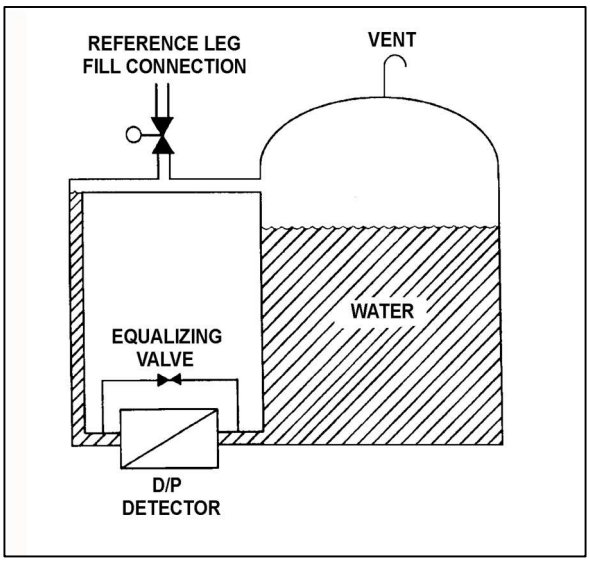

TOPIC: 291002
KNOWLEDGE: K1.07 [3.2/3.2]
QID: B7602 (B7602)

Refer to the drawing of a water storage tank with a differential pressure (D/P) level detection system (see figure below). The level detector has just been calibrated.

How will the indicated level be affected if condensation partially fills the normally dry reference leg?

A. Indicated level will <u>not</u> be affected.

B. Indicated level will be lower than actual level.

C. Indicated level will be higher than actual level.

D. Indicated level may be higher or lower than actual level depending on the pressure in the upper volume of the tank.

ANSWER: B.

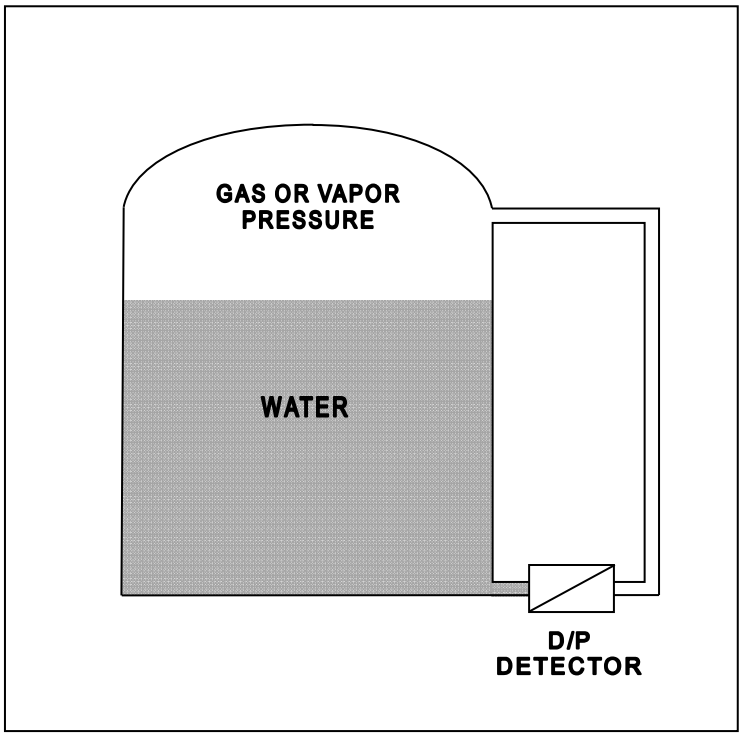

TOPIC: 291002
KNOWLEDGE: K1.08 [2.8/2.9]
QID: B12 (P609)

Refer to the drawing of two water storage tanks with four differential pressure (D/P) level detectors (see figure below).

The tanks are identical with equal water levels and both are pressurized to 20 psig. All detectors were calibrated at the current water temperature and 70°F external (ambient) temperature.

Which detectors will provide the most accurate level indication following an increase in external (ambient) temperature from 70°F to 100°F? (Assume tank contents temperatures and external pressure do not change.)

A. 1 and 3

B. 2 and 4

C. 1 and 4

D. 2 and 3

ANSWER: B.

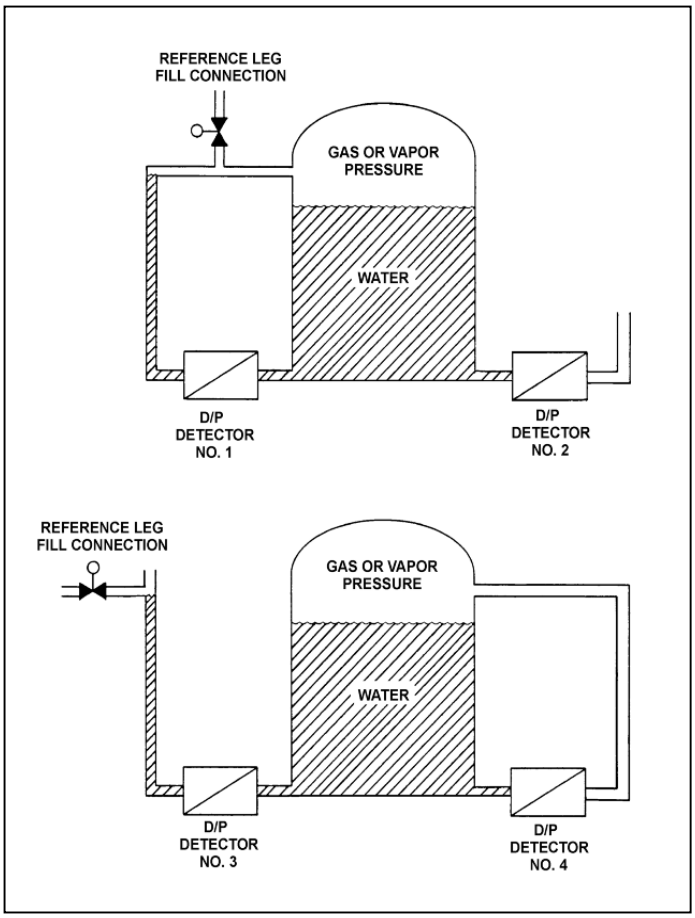

TOPIC: 291002
KNOWLEDGE: K1.08 [2.8/2.9]
QID: B308 (P309)

Refer to the drawing of a water storage tank with a differential pressure (D/P) level detection system (see figure below).

Tank water level indication will be lower than actual level when reference leg temperature is _____ than calibration conditions or when there is a break in the _____ leg of the D/P cell.

A. less; reference

B. less; variable

C. greater; reference

D. greater; variable

ANSWER: B.

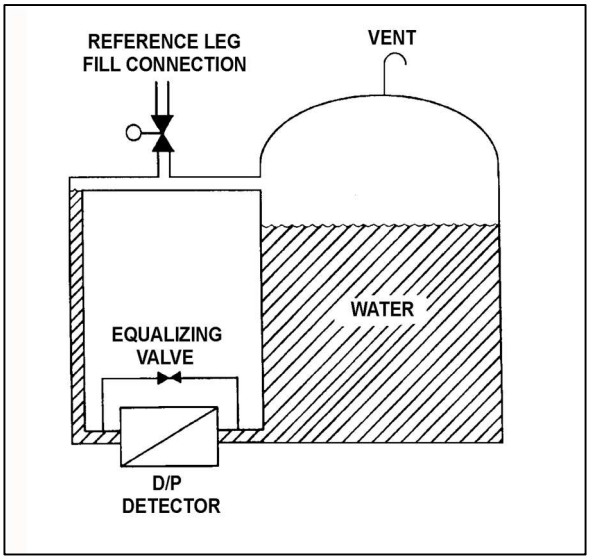

TOPIC: 291002
KNOWLEDGE: K1.08 [2.8/2.9]
QID: B710 (P709)

Refer to the drawing of two water storage tanks with four differential pressure (D/P) level detectors (see figure below).

The tanks are identical and are being maintained at 17 psia and 70 percent water level (calibration conditions). They are located in a building that is currently at atmospheric pressure.

If the building ventilation system creates a vacuum in the building, which level detectors will provide the lowest level indications?

A. 1 and 3

B. 1 and 4

C. 2 and 3

D. 2 and 4

ANSWER: B.

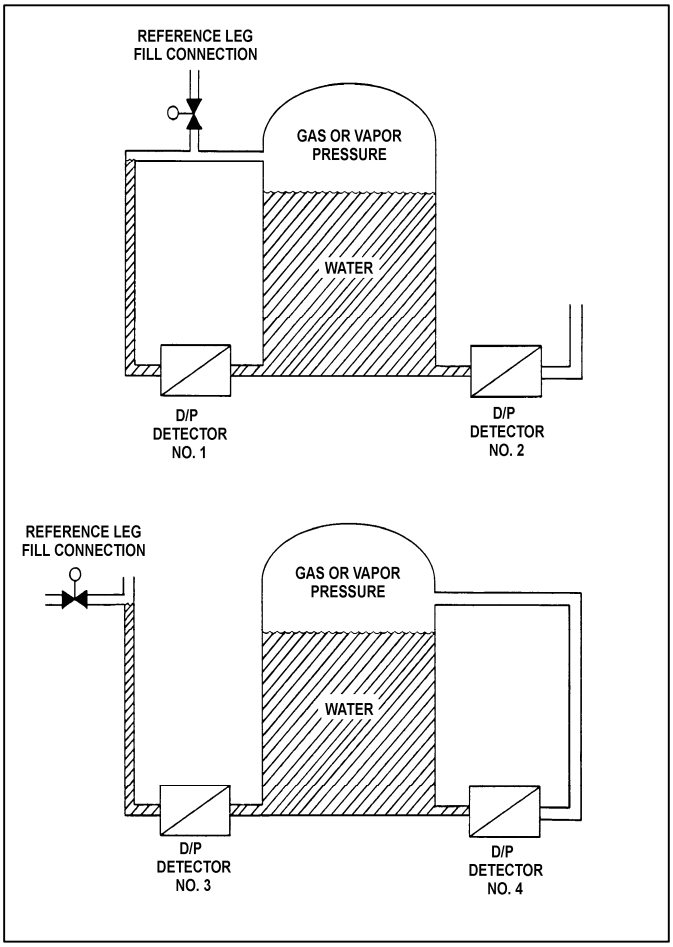

TOPIC: 291002
KNOWLEDGE: K1.08 [2.8/2.9]
QID: B1609 (P1108)

Refer to the drawing of a water storage tank with a differential pressure (D/P) level detection system (see figure below).

A calibrated D/P level detector is being used to measure level in a vented tank inside the auxiliary building. If building pressure increases with no change in temperature, the associated level indication will...

A. decrease, then increase and stabilize at the actual level.

B. decrease and stabilize below the actual level.

C. increase and stabilize above the actual level.

D. remain at the actual level.

ANSWER: D.

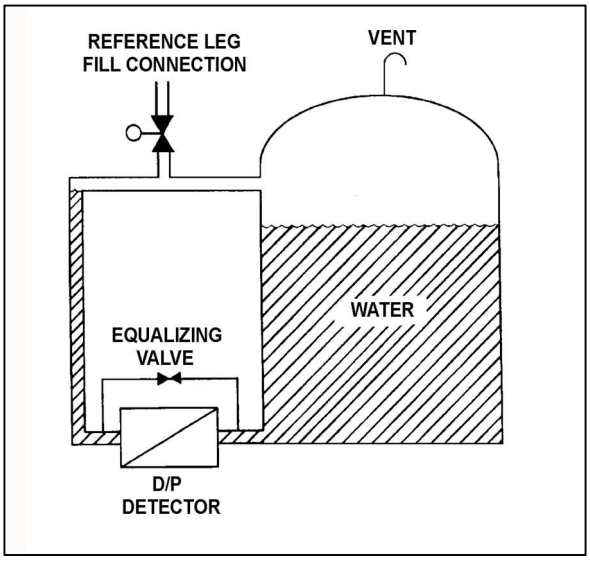

TOPIC: 291002
KNOWLEDGE: K1.08 [2.8/2.9]
QID: B1909 (P1008)

Refer to the drawing of a water storage tank with a differential pressure (D/P) level detector (see figure below).

The level detector is being used in a level control system that is calibrated to maintain tank level at 75 percent at the current water temperature of 120°F. If water temperature gradually decreases and stabilizes at 90°F, actual tank level will...

A. remain at 75 percent.

B. increase and stabilize above 75 percent.

C. oscillate around 75 percent.

D. decrease and stabilize below 75 percent.

ANSWER: D.

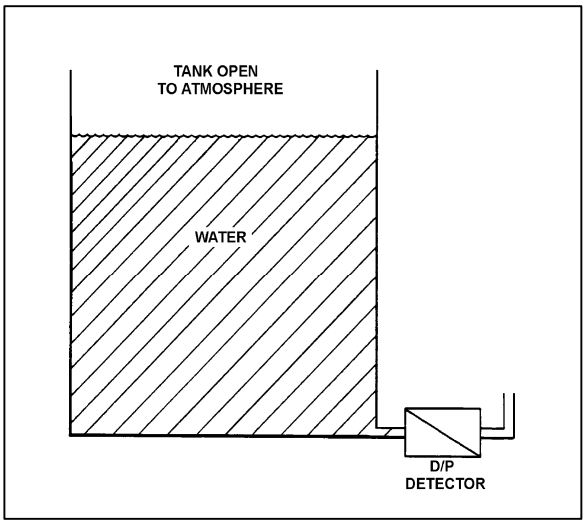

TOPIC: 291002
KNOWLEDGE: K1.08 [2.8/2.9]
QID: B2609 (P708)

Refer to the drawing of a water storage tank with a differential pressure (D/P) level detector (see figure below).

The level detector is being used in a level control system that is calibrated to maintain tank level at 75 percent at the current water temperature of 90°F. If water temperature gradually increases and stabilizes at 120°F, the level control system will cause actual tank level to...

A. remain at 75 percent.

B. increase and stabilize above 75 percent.

C. oscillate around 75 percent.

D. decrease and stabilize below 75 percent.

ANSWER: B.

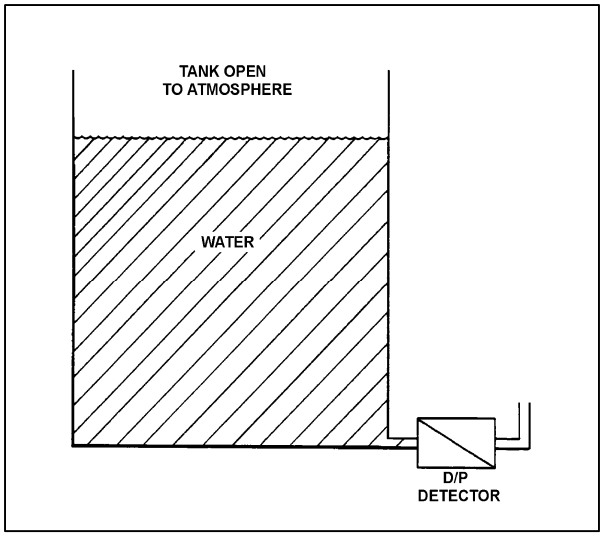

TOPIC: 291002
KNOWLEDGE: K1.08 [2.8/2.9]
QID: B2808 (P2810)

Refer to the drawing of a reactor vessel level detection system (see figure below). The differential pressure (D/P) detector was calibrated while the plant was at normal operating conditions.

With the plant initially at normal operating conditions, a reactor vessel head leak occurred. Reactor vessel pressure decreased by 300 psia, and the ambient air temperature surrounding the reference leg increased by 80°F, where these parameters stabilized.

If the actual reactor vessel water level is 6 feet above the fuel, the reduced reactor vessel pressure will tend to make the indicated water level read _____ than actual level; and the increased reference leg temperature will tend to make the indicated water level read _____ than actual level.

A. higher; higher

B. higher; lower

C. lower; higher

D. lower; lower

ANSWER: A.

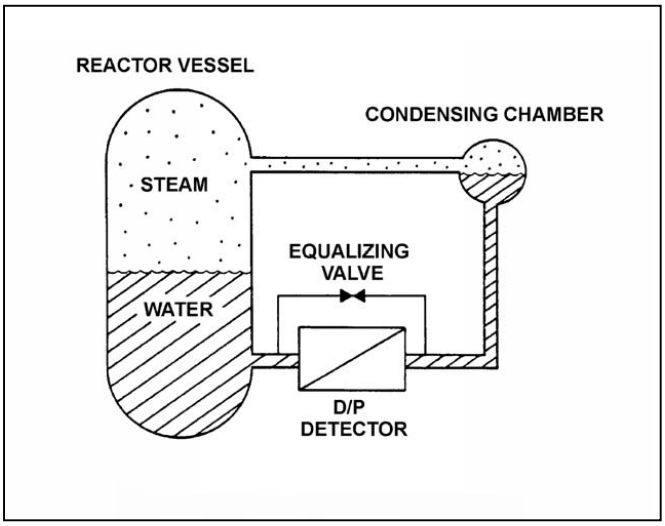

TOPIC: 291002
KNOWLEDGE: K1.08 [2.8/2.9]
QID: B3408 (P3407)

Refer to the drawing of a water storage tank with a differential pressure (D/P) level detection system (see figure below). Assume that the initial temperature of the reference leg and the water in the tank are the same, and that reference leg temperature and level do not change.

The level detector is being used in a level control system (not shown) that is calibrated to maintain tank level at 75 percent at the current tank water temperature (70°F) and pressure (5 psig).

If the tank water temperature remains constant, but the tank pressure is increased by 10 psig, the level control system will cause actual tank level to...

A. remain at 75 percent.

B. increase and stabilize above 75 percent.

C. oscillate around 75 percent.

D. decrease and stabilize below 75 percent.

ANSWER: A.

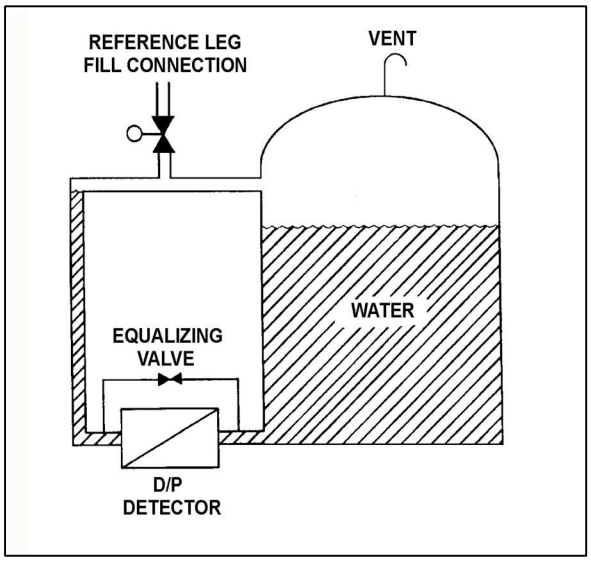

TOPIC: 291002
KNOWLEDGE: K1.08 [2.8/2.9]
QID: B4006 (P4004)

Refer to the drawing of a water storage tank with a differential pressure (D/P) level detection system (see figure below).

The level instrument has just been calibrated to indicate actual tank water level. Assume that tank water temperature and level remain constant. If the reference leg temperature increases by 20°F, indicated tank water level will...

A. be unpredictable.

B. equal the actual level.

C. be less than the actual level.

D. be greater than the actual level.

ANSWER: B.

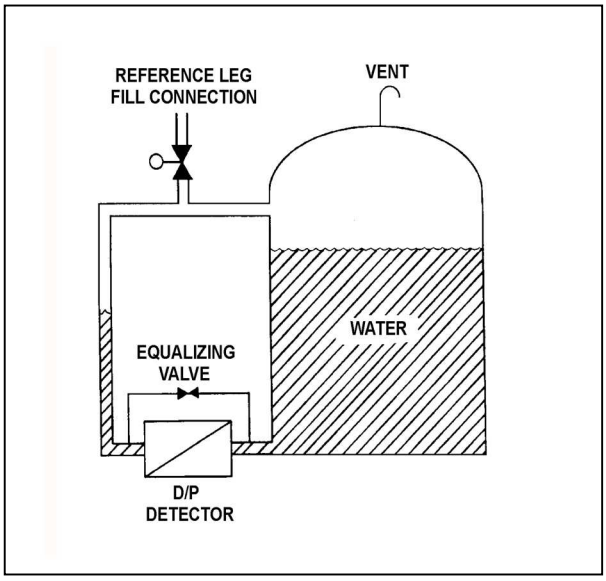

TOPIC: 291002
KNOWLEDGE: K1.09 [3.3/3.3]
QID: B165

Reactor feedwater flow and vessel level detectors use differential pressure (D/P) cells to measure flow and level. If a level D/P cell diaphragm fails, the level indication...

A. will go to 0.

B. will slowly move to 50 percent (midrange).

C. will indicate 100 percent (full range).

D. remains the same.

ANSWER: C.

TOPIC: 291002
KNOWLEDGE: K1.09 [3.3/3.3]
QID: B207

Refer to the drawing of a water storage tank with a differential pressure (D/P) level detection system (see figure below).

Which one of the following failures will cause the lowest stable water level indication? (Assume no operator action and no tank makeup.)

A. The tank level sensing line ruptures at the detector.

B. The reference leg ruptures at the detector.

C. The gas or vapor space ruptures.

D. The D/P cell diaphragm ruptures.

ANSWER: A.

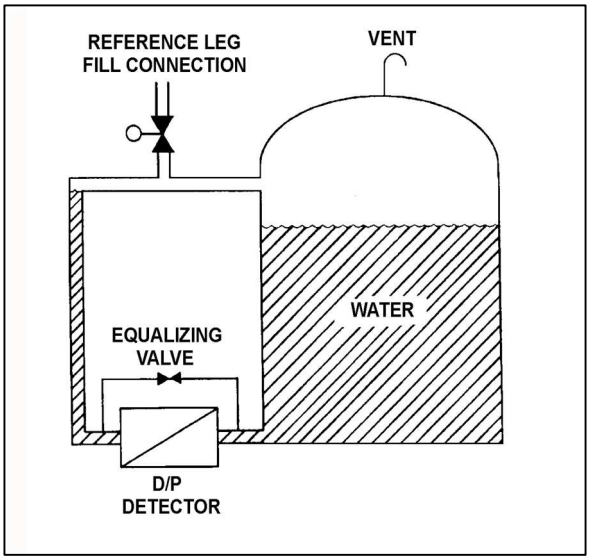

TOPIC: 291002
KNOWLEDGE: K1.09 [3.3/3.3]
QID: B1010 (P209)

Refer to the drawing of a reactor vessel differential pressure (D/P) level detection system (see figure below).

The D/P detector was calibrated at the current conditions. Which one of the following will cause the level instrument to indicate lower than actual level? (Assume actual level remains the same.)

A. The variable leg ruptures.

B. The equalizing valve is opened.

C. The reference leg temperature increases.

D. The D/P detector diaphragm ruptures.

ANSWER: A.

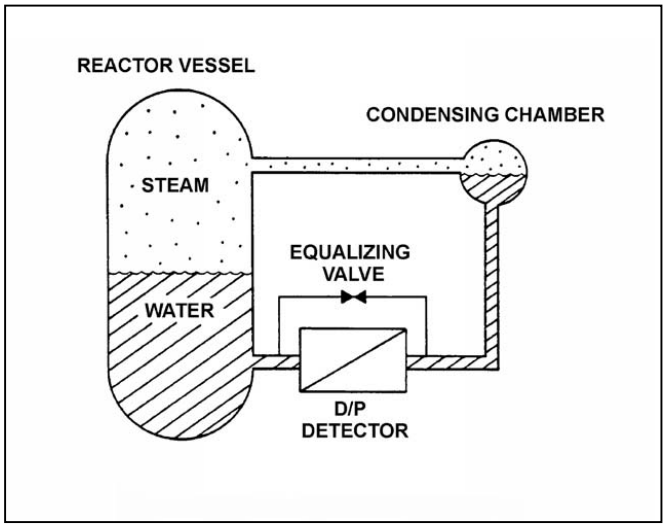

TOPIC: 291002
KNOWLEDGE: K1.09 [3.3/3.3]
QID: B1212 (P2408)

Refer to the drawing of a reactor vessel (RV) differential pressure (D/P) level detection system (see figure below).

Which one of the following events will result in a reactor vessel level indication that is greater than actual level?

A. The RV pressure increases by 50 psia.

B. The variable leg breaks and completely drains.

C. A portion of the reference leg water flashes to steam.

D. The temperature surrounding the RV and reference leg decreases by 30°F.

ANSWER: C.

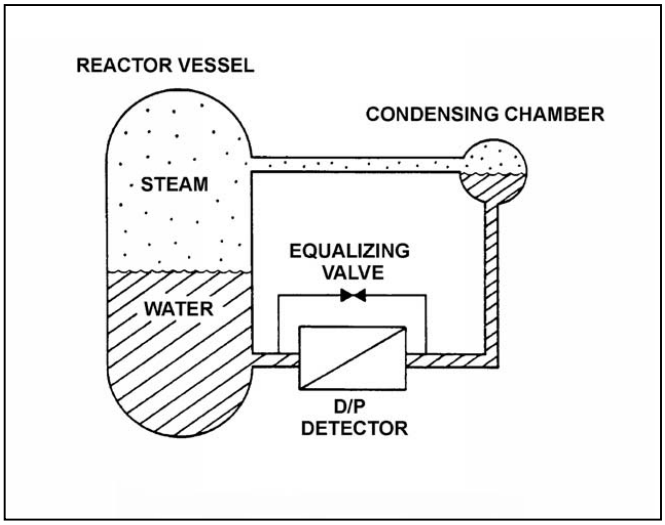

TOPIC: 291002
KNOWLEDGE: K1.09 [3.3/3.3]
QID: B1308

Refer to the drawing of a reactor vessel differential pressure (D/P) level detection system (see figure below).

Which one of the following will result in the lowest reactor vessel level indication?

A. The reactor pressure increases by 100 psig.

B. The D/P cell equalizing valve leaks by.

C. The reference leg flashes to steam.

D. The temperature of the reference leg decreases by 20°F.

ANSWER: D.

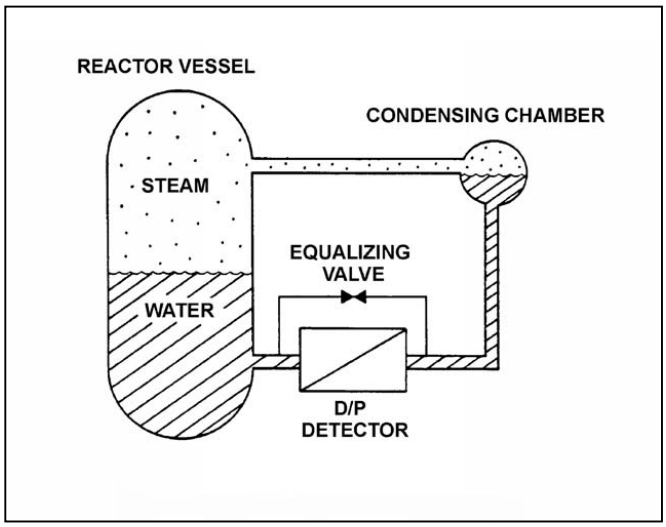

TOPIC: 291002
KNOWLEDGE: K1.09 [3.3/3.3]
QID: B1410

Refer to the drawing of a reactor vessel differential pressure (D/P) level detection system (see figure below).

Which one of the following events will result in a reactor vessel level indication that is greater than actual level?

A. The external pressure surrounding the D/P detector decreases by 2 psi.

B. Reactor vessel pressure increases by 10 psi with no change in actual water level.

C. Actual vessel level increases by 6 inches.

D. The temperature of the reference leg increases by 20°F.

ANSWER: D.

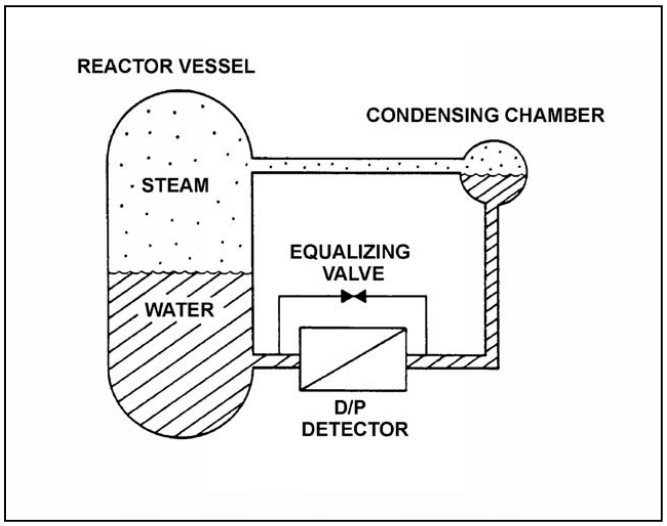

TOPIC: 291002
KNOWLEDGE: K1.09 [3.3/3.3]
QID: B2308 (P2308)

Refer to the drawing of a reactor vessel differential pressure (D/P) level detection system that was calibrated at normal operating conditions (see figure below).

A reactor vessel cooldown has resulted in a decrease in reactor vessel pressure from 900 psia to 400 psia in one hour. Without density compensation of the level instrumentation, at the end of the cooldown reactor vessel level indication would indicate _____ than actual level because the density of the water in the _____ has changed significantly.

A. higher; reference leg

B. higher; reactor vessel

C. lower; reference leg

D. lower; reactor vessel

ANSWER: B.

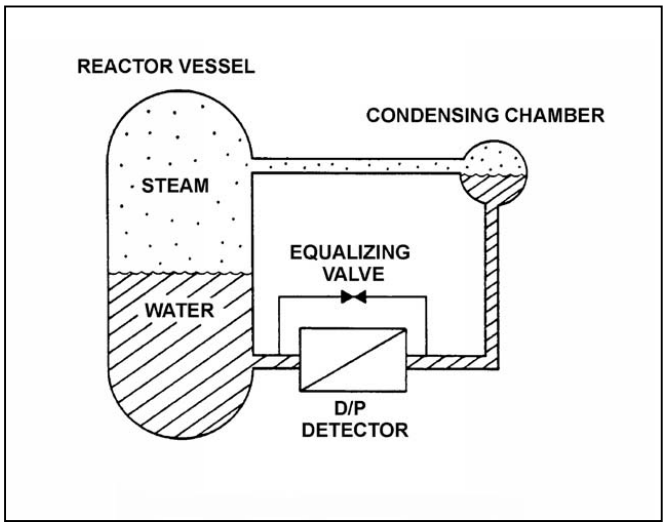

TOPIC: 291002
KNOWLEDGE: K1.09 [3.3/3.3]
QID: B2709

Refer to the drawing of a reactor vessel (RV) differential pressure (D/P) level detection system (see figure below).

The reactor vessel is supplying steam at normal operating temperature and pressure, and the level instrumentation has just been calibrated. Which one of the following events will result in a vessel level indication that is lower than actual level?

A. RV saturation pressure increases by 50 psi.

B. Actual RV water level decreases by 6 inches.

C. The external pressure surrounding the D/P detector decreases by 2 psi.

D. The external temperature surrounding the reference leg increases by 20°F.

ANSWER: A.

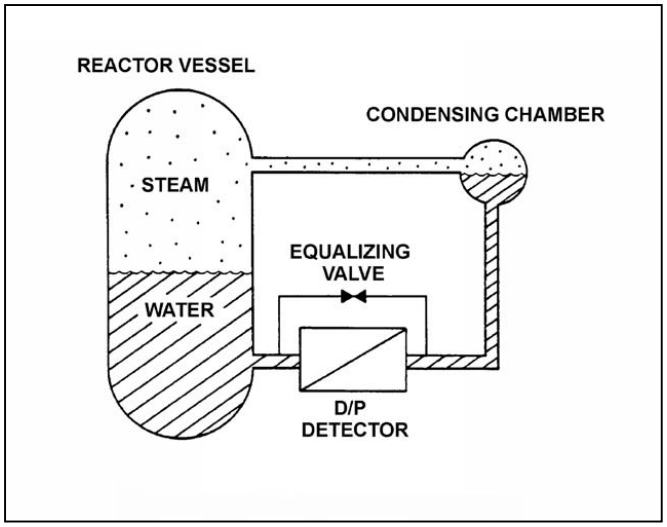

TOPIC: 291002
KNOWLEDGE: K1.09 [3.3/3.3]
QID: B3808

Refer to the drawing of a reactor vessel (RV) differential pressure (D/P) level detection system (see figure below).

A reactor is shutdown with the reactor coolant system being maintained at 100 psia. The level detector has just been calibrated. Suddenly a rupture in the condensing chamber of the level detector results in a rapid drop of the condensing chamber pressure to atmospheric pressure.

Given the following current conditions:

- The condensing chamber is at atmospheric pressure.
- RV pressure is 98 psia and slowly decreasing.
- Bulk reference leg temperature is 120°F.
- Actual RV level has not changed significantly.

Which one of the following describes the current RV level indication from the detector?

A. Off scale low, because the bulk of the water in the reference leg has flashed to steam.

B. Off scale high, because the bulk of the water in the reference leg has flashed to steam.

C. Off scale low, because the static pressure on the reference leg is much less than the static pressure in the RV.

D. Off scale high, because the static pressure on the reference leg is much less than the static pressure in the RV.

ANSWER: D.

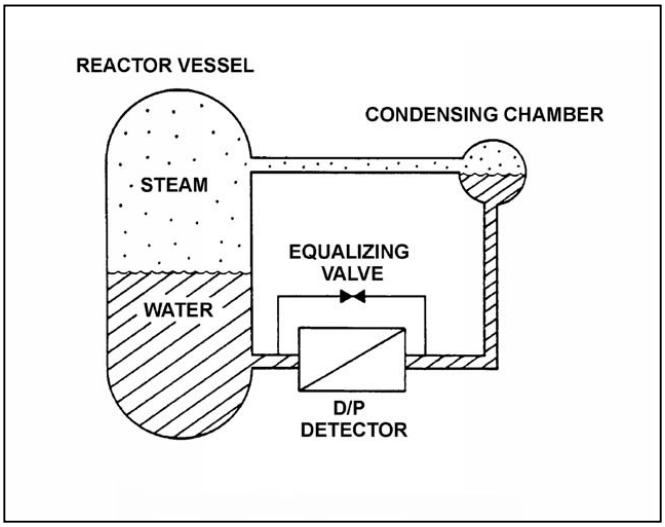

TOPIC: 291002
KNOWLEDGE: K1.10 [2.4/2.5]
QID: B410 (P413)

If the pressure sensed by a bourdon tube increases, the curvature of the detector will _____ because the greater force is being applied to the _____ curve of the detector.

A. increase; outer

B. increase; inner

C. decrease; outer

D. decrease; inner

ANSWER: C.

TOPIC: 291002
KNOWLEDGE: K1.10 [2.4/2.5]
QID: B610 (P2610)

Refer to the drawing of a bellows-type differential pressure (D/P) detector (see figure below).

The spring in this detector (shown in a compressed state) has weakened from long-term use. If the actual D/P is constant, how will indicated D/P respond as the spring weakens?

A. Increase, because the spring will expand more

B. Decrease, because the spring will expand more

C. Increase, because the spring will compress more

D. Decrease, because the spring will compress more

ANSWER: C.

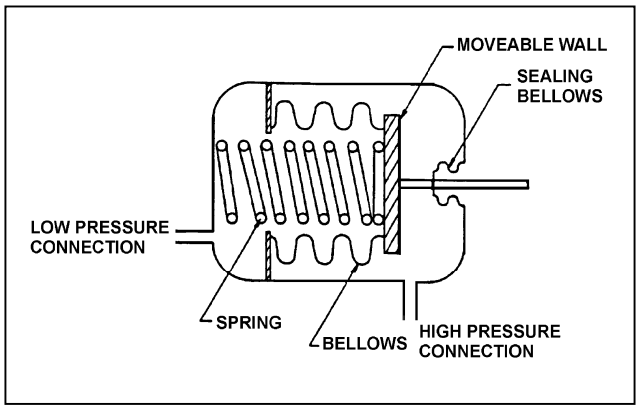

TOPIC: 291002
KNOWLEDGE: K1.10 [2.4/2.5]
QID: B1011 (P1508)

A bourdon tube works on the principle that when the pressure inside the tube decreases, the tube tends to: (Assume detected pressure remains above atmospheric pressure.)

A. coil, due to an increased pressure-induced force on the outside of the tube.

B. straighten, due to an increased pressure-induced force on the outside of the tube.

C. coil, due to the spring action of the metal overcoming the pressure-induced force on the inside of the tube.

D. straighten, due to the spring action of the metal overcoming the pressure-induced force on the inside of the tube.

ANSWER: C.

TOPIC: 291002
KNOWLEDGE: K1.10 [2.4/2.5]
QID: B2109 (P2109)

A centrifugal pump is taking suction from the bottom of a vented cylindrical storage tank that contains 100,000 gallons of water at 60°F. A pressure gauge at the inlet to the pump indicates 40 psig. Over the next several days, storage tank temperature increases to 90°F with <u>no</u> change in tank water level and <u>no</u> change in head loss in the pump suction line.

Which one of the following is the current pressure at the inlet to the pump?

A. 31.2 psig

B. 34.6 psig

C. 37.4 psig

D. 39.8 psig

ANSWER: D.

TOPIC: 291002
KNOWLEDGE: K1.11 [2.4/2.5]
QID: B210 (P210)

A simple bellows pressure detector is connected to a cooling water system. The detector is located in the reactor containment and has its low pressure side vented to the containment atmosphere. Current system pressure indication is 100 psig.

If a main steam line break raises containment pressure by 40 psig, the system pressure indication will: (Disregard any temperature effect on the pressure detector.)

A. increase by 40 psig.

B. increase by the square root of 40 psig.

C. decrease by 40 psig.

D. decrease by the square root of 40 psig.

ANSWER: C.

TOPIC: 291002
KNOWLEDGE: K1.11 [2.3/2.5]
QID: B711 (P710)

Cooling water system pressure is being monitored by a simple diaphragm pressure detector with its low pressure side vented to the containment. If a main steamline rupture raises containment pressure by 20 psi, cooling water system pressure indication will: (Disregard any temperature effect on the detector.)

A. increase by 20 psi.

B. decrease by 20 psi.

C. increase by the square root of 20 psi.

D. decrease by the square root of 20 psi.

ANSWER: B.

TOPIC: 291002
KNOWLEDGE: K1.11 [2.3/2.5]
QID: B1310 (P509)

A cooling water system bourdon tube pressure detector is located inside a sealed building and system pressure currently indicates 50 psig. A building ambient temperature increase of 20°F will cause a _____ change in indicated system pressure; a building pressure increase of 20 psig will cause a _____ change in indicated system pressure.

A. significant; significant

B. negligible; significant

C. significant; negligible

D. negligible; negligible

ANSWER: B.

TOPIC: 291002
KNOWLEDGE: K1.11 [2.3/2.5]
QID: B1908 (P2211)

Refer to the drawing of a bellows-type pressure detector (see figure below).

A bellows-type pressure detector with its low-pressure side vented to containment atmosphere is being used to measure reactor vessel pressure. A decrease in the associated pressure indication will be caused by either a containment pressure _____ or a _____.

A. increase; ruptured bellows

B. increase; broken spring

C. decrease; ruptured bellows

D. decrease; broken spring

ANSWER: A.

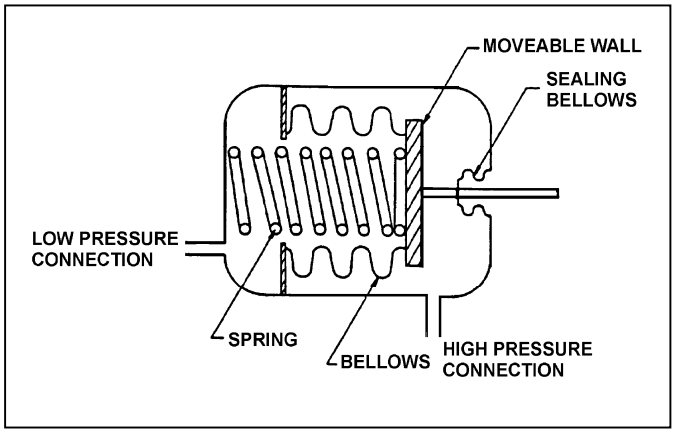

TOPIC: 291002
KNOWLEDGE: K1.11 [2.3/2.5]
QID: B2910 (P1011)

A properly calibrated 0 to 100 psia diaphragm pressure detector is connected to a pressurized system; the low pressure side of the detector is vented to the atmosphere. The detector is currently producing a system pressure indication of 75 psia.

If the detector diaphragm ruptures, indicated pressure will be approximately...

A. 0 psia.

B. 15 psia.

C. 60 psia.

D. 90 psia.

ANSWER: B.

TOPIC: 291002
KNOWLEDGE: K1.11 [2.3/2.5]
QID: B2912 (P3509)

The pressure within a cooling water system is 100 psig, as indicated by a bourdon tube pressure detector. The cooling water system and the detector are located inside a reactor containment building. The pressure detector case is vented to the containment building, which is currently at atmospheric pressure.

If a steam line rupture raises the containment building pressure by 20 psi, the cooling water system pressure indication will... (Disregard any temperature effect on the detector.)

A. decrease to 80 psig.

B. decrease by a small, but indeterminate amount.

C. increase to 120 psig.

D. increase by a small, but indeterminate amount.

ANSWER: A.

TOPIC: 291002
KNOWLEDGE: K1.11 [2.3/2.5]
QID: B7504 (P7503)

A cooling water system pressure detector uses a bourdon tube as the sensing element. Which one of the following explains how the indicated system pressure will be affected if a local steam leak raises the temperature of the bourdon tube by 50°F? (Assume the cooling water system pressure does not change.)

A. Indicated pressure will decrease because the bourdon tube will become more flexible.

B. Indicated pressure will increase because the bourdon tube will become more flexible.

C. Indicated pressure will decrease because the bourdon tube internal pressure will increase.

D. Indicated pressure will increase because the bourdon tube internal pressure will increase.

ANSWER: B.

TOPIC: 291002
KNOWLEDGE: K1.11 [2.3/2.5]
QID: B7642 (P7642)

A cooling water system pressure detector uses a bourdon tube as the sensing element. Which one of the following explains how the indicated system pressure will be affected if the temperature of the bourdon tube decreases by 30°F? (Assume the cooling water system pressure does not change.)

A. Indicated pressure will decrease because the bourdon tube will become less flexible.

B. Indicated pressure will increase because the bourdon tube will become less flexible.

C. Indicated pressure will decrease because the bourdon tube internal pressure will decrease.

D. Indicated pressure will increase because the bourdon tube internal pressure will decrease.

ANSWER: A.

TOPIC: 291002
KNOWLEDGE: K1.12 [2.3/2.5]
QID: B611

Which one of the following parameters requires square root compensation when measured by a differential pressure detector?

A. Reactor vessel level

B. Condenser vacuum

C. Reactor vessel pressure

D. Recirculation pump flow rate

ANSWER: D.

TOPIC: 291002
KNOWLEDGE: K1.13 [2.9/3.1]
QID: B212 (P211)

A bourdon-tube pressure detector was indicating 50 percent of scale when it was suddenly exposed to a high pressure transient that caused permanent strain to the bourdon tube. The detector remained intact and actual pressure was restored to its original value.

During the pressure transient, the affected pressure indication initially went off-scale high. After the original pressure was restored, the indication was...

A. unpredictable.

B. less than 50 percent of scale.

C. 50 percent of scale.

D. greater than 50 percent of scale.

ANSWER: D.

TOPIC: 291002
KNOWLEDGE: K1.15 [2.6/2.8]
QID: B14

Which one of the following describes a characteristic of a thermocouple?

A. A junction between two dissimilar metals will exhibit a change in electrical resistance proportional to temperature.

B. A junction between two dissimilar metals will generate a voltage proportional to temperature.

C. Thermocouples are generally more accurate than resistance temperature detectors.

D. Indication will fail high off scale with an open circuit.

ANSWER: B.

TOPIC: 291002
KNOWLEDGE: K1.15 [2.6/2.8]
QID: B208 (P414)

A resistance temperature detector (RTD) is used in a balanced bridge circuit to indicate temperature. If the RTD develops an open circuit (bridge circuit remains intact), temperature indication will fail...

A. high.

B. low.

C. as is.

D. to midscale.

ANSWER: A.

TOPIC: 291002
KNOWLEDGE: K1.15 [2.6/2.8]
QID: B309 (P1510)

In contrast to a thermocouple, a resistance temperature detector...

A. is used in high temperature applications.

B. does not require an external power supply for temperature indication.

C. uses a single type of metal or alloy in the sensing element.

D. is commonly placed in direct contact with the monitored substance.

ANSWER: C.

TOPIC: 291002
KNOWLEDGE: K1.15 [2.6/2.8]
QID: B310 (P312)

If shorting occurs within a resistance temperature detector, the associated indication will fail...

A. low.

B. high.

C. as is.

D. to midscale.

ANSWER: A.

TOPIC: 291002
KNOWLEDGE: K1.15 [2.6/2.8]
QID: B1112

An operator suspects that a steam temperature instrument reading is not correct. A recently calibrated pressure gauge, which senses steam pressure for the same steam line, indicates 351 psig.

Assuming the system is operating at saturated conditions, what is the actual steam temperature?

A. 424°F

B. 428°F

C. 432°F

D. 436°F

ANSWER: D.

TOPIC: 291002
KNOWLEDGE: K1.15 [2.6/2.8]
QID: B1314 (P1209)

Refer to the drawing of a simple thermocouple circuit (see figure below).

A thermocouple temperature indication is initially 350°F. A small steam leak raises reference (cold) junction temperature by 20°F, while the measuring junction temperature remains constant. Without temperature compensation for the reference junction, the new temperature indication will be...

A. 310°F.

B. 330°F.

C. 370°F.

D. 390°F.

ANSWER: B.

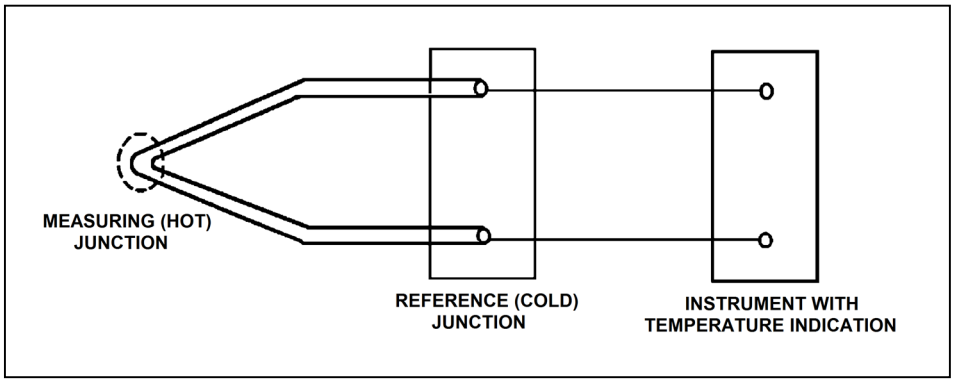

TOPIC: 291002
KNOWLEDGE: K1.15 [2.6/2.8]
QID: B1510 (P2212)

Refer to the drawing of a simple thermocouple circuit (see figure below).

Circuit temperature indication is initially 350°F. The reference (cold) junction temperature decreases by 10°F, while the measuring junction temperature remains constant. Without temperature compensation for the reference junction, the new temperature indication will be...

A. 340°F.

B. 350°F.

C. 360°F.

D. 370°F.

ANSWER: C.

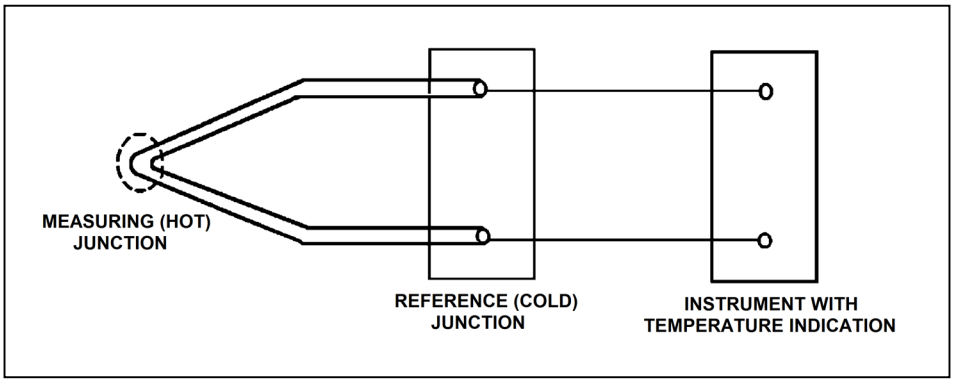

TOPIC: 291002
KNOWLEDGE: K1.15 [2.6/2.8]
QID: B1710 (P1710)

Refer to the drawing of a simple thermocouple circuit (see figure below).

A thermocouple temperature indication is initially 150°F. A small steam leak raises both the measuring (hot) junction and reference (cold) junction temperatures by 20°F. Without temperature compensation for the reference junction, the new temperature indication will be...

A. 130°F.

B. 150°F.

C. 170°F.

D. 190°F.

ANSWER: B.

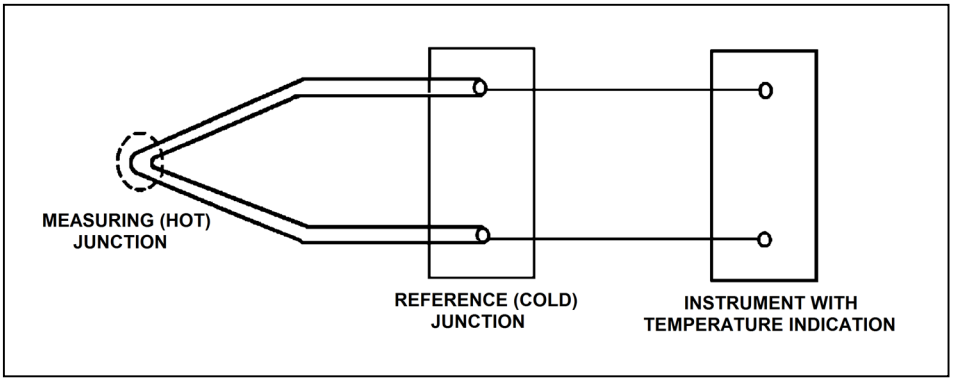

TOPIC: 291002
KNOWLEDGE: K1.15 [2.6/2.8]
QID: B2009 (P2011)

Refer to the drawing of a simple thermocouple circuit (see figure below) that is calibrated for a reference junction temperature of 90°F.

Thermocouple temperature indication is currently 150°F. Indicator range is from 0°F to 2000°F.

If one of the thermocouple extension wires loosens and becomes dislodged from its terminal in the reference junction panel, which one of the following temperature indications will result?

A. 0°F

B. 60°F

C. 90°F

D. 2000°F

ANSWER: C.

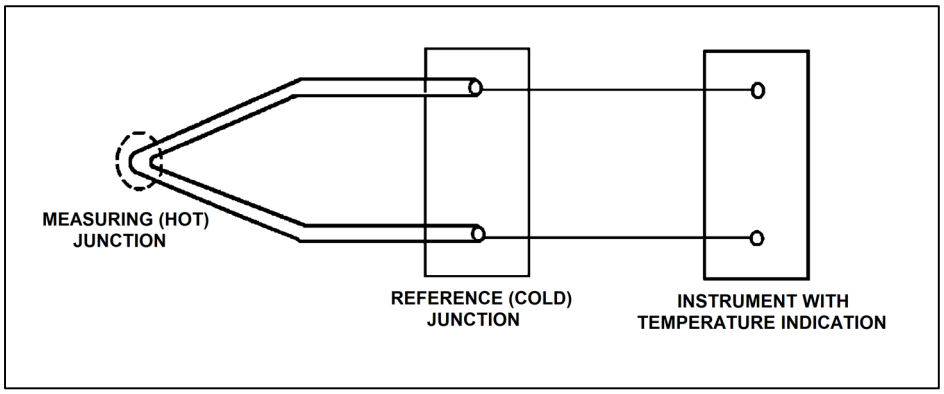

TOPIC: 291002
KNOWLEDGE: K1.15 [2.6/2.8]
QID: B2412 (P2409)

What is the purpose of the reference junction panel that is provided with many thermocouple circuits?

A. Ensures that thermocouple output is amplified sufficiently for use by temperature indication devices.

B. Ensures that temperature changes away from the thermocouple measuring junction do not affect thermocouple temperature indication.

C. Ensures that electrical noise in the thermocouple extension wires does not affect thermocouple temperature indication.

D. Ensures that different lengths of thermocouple extension wires do not affect thermocouple temperature indication.

ANSWER: B.

TOPIC: 291002
KNOWLEDGE: K1.15 [2.6/2.8]
QID: B2712 (P2711)

Unlike a resistance temperature detector, a typical thermocouple...

A. uses a single type of metal in the sensing element

B. requires a temperature-controlled reference junction.

C. can provide temperature input to a valve controller in a cooling water system.

D. requires an external power supply to provide indication of temperature.

ANSWER: B.

TOPIC: 291002
KNOWLEDGE: K1.15 [2.6/2.8]
QID: B2911 (P1412)

Refer to the drawing of a simple thermocouple circuit (see figure below).

A thermocouple temperature indication is initially 390°F. A small steam leak raises reference (cold) junction temperature by 20°F, while the measuring junction temperature remains constant. Without temperature compensation for the reference junction, the new temperature indication will be...

A. 370°F.

B. 390°F.

C. 400°F.

D. 410°F.

ANSWER: A.

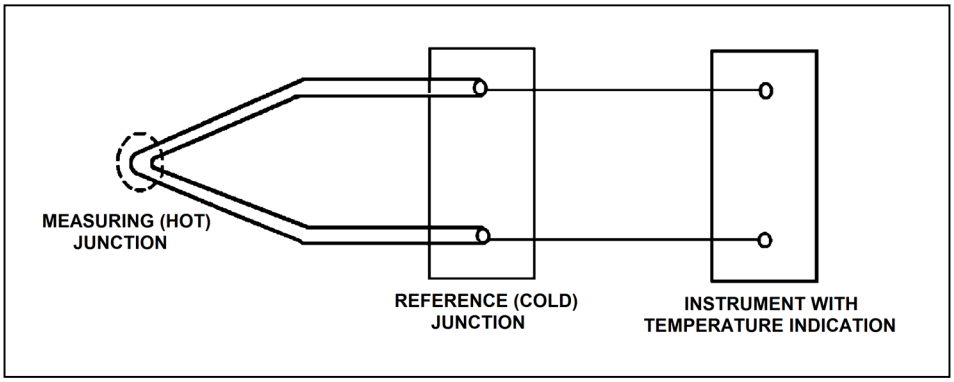

TOPIC: 291002
KNOWLEDGE: K1.15 [2.6/2.8]
QID: B3013 (P3011)

Refer to the drawing of a simple thermocouple circuit (see figure below).

A thermocouple temperature indication is initially 410°F with the reference (cold) junction at 125°F. An ambient temperature decrease lowers the reference junction temperature to 110°F, while the measuring junction temperature remains constant. Without temperature compensation for the reference junction, the new thermocouple temperature indication will be...

A. 380°F.

B. 395°F.

C. 410°F.

D. 425°F.

ANSWER: D.

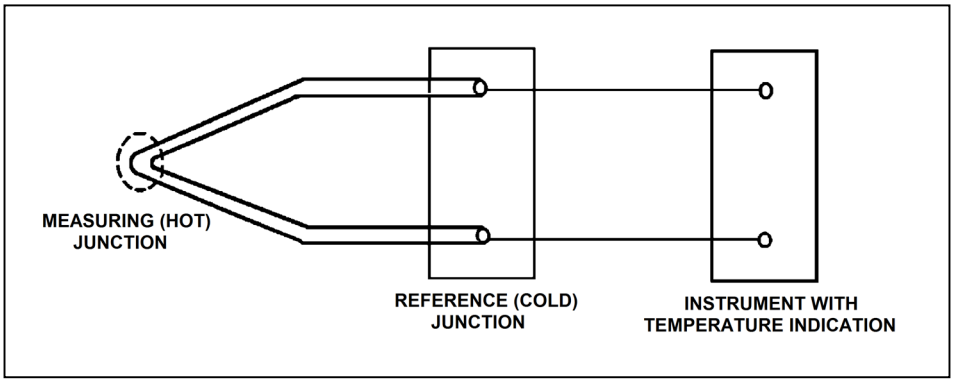

TOPIC: 291002
KNOWLEDGE: K1.15 [2.6/2.8]
QID: B4206 (P4206)

Refer to the drawing of a simple thermocouple circuit (see figure below).

Given that the temperatures at the measuring and reference junctions remain constant, if a ventilation system malfunction causes the temperature of the temperature indication panel to increase by 10°F, indicated temperature will...

A. not be affected.

B. increase by 10°F.

C. decrease by 10°F.

D. change in an unpredictable manner.

ANSWER: A.

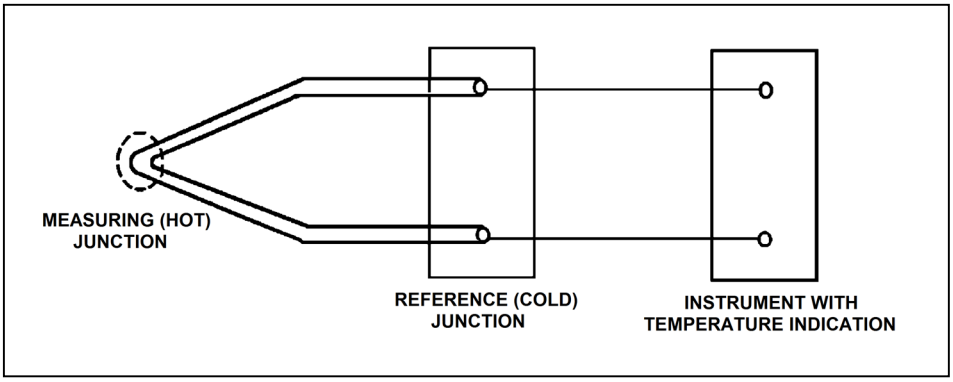

TOPIC: 291002
KNOWLEDGE: K1.15 [2.6/2.8]
QID: B5305 (P5305)

Refer to the drawing of a simple thermocouple circuit (see figure below).

The measuring and reference junctions are located inside the reactor containment building while the instrument is located in a remote location outside the containment building. Thermocouple temperature indication is initially 500°F.

An ambient temperature decrease outside the containment building lowers the temperature of the instrument by 10°F, while the measuring and reference junction temperatures remain constant. Thermocouple temperature indication at the lower ambient temperature will be...

A. 490°F.

B. 500°F.

C. 510°F.

D. unpredictable.

ANSWER: B.

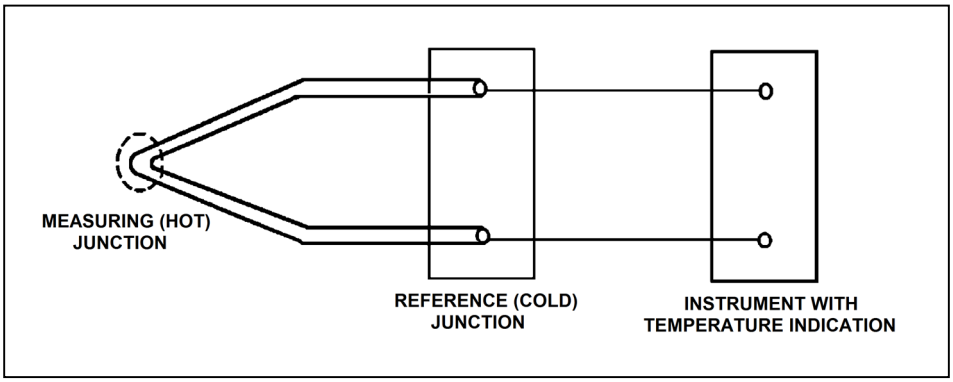

TOPIC: 291002
KNOWLEDGE: K1.15 [2.6/2.8]
QID: B5507 (P5505)

Refer to the drawing of a simple chromel-alumel thermocouple circuit (see figure below).

What is the effect on the thermocouple reference junctions if the chromel and alumel extension wires from the thermocouple connection head to the reference junction panel are replaced with copper wires?

A. There will no longer be any reference junctions.

B. The reference junctions will be located in the temperature instrument.

C. The reference junctions will still be located in the reference junction panel.

D. The reference junctions will be located in the thermocouple connection head.

ANSWER: D.

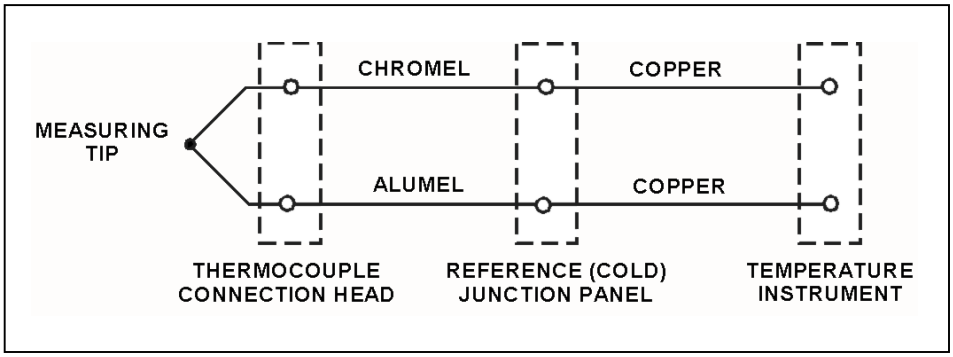

TOPIC: 291002
KNOWLEDGE: K1.15 [2.6/2.8]
QID: B5805 (P5805)

Which one of the following is a characteristic of a resistance temperature detector but not a thermocouple?

A. Sensing element is made from a single metal or alloy.

B. Requires a reference junction for accurate temperature measurement.

C. Extension leads made from relatively expensive metals or alloys are required for accurate temperature measurement.

D. Temperature measurement relies on a sensor material property that varies directly with the change in the measured temperature.

ANSWER: A.

TOPIC: 291002
KNOWLEDGE: K1.15 [2.6/2.8]
QID: B6005 (P6004)

Refer to the drawing of a simple chromel-alumel thermocouple circuit (see figure below).

What is the effect on the thermocouple reference junctions if the copper extension wires from the reference junction panel to the temperature instrument are replaced with alumel (top) and chromel (bottom) extension wires?

A. The reference junctions will be located in the thermocouple connection head.

B. The reference junctions will still be located in the reference junction panel.

C. The reference junctions will be located in the temperature instrument.

D. There will no longer be any reference junctions.

ANSWER: C.

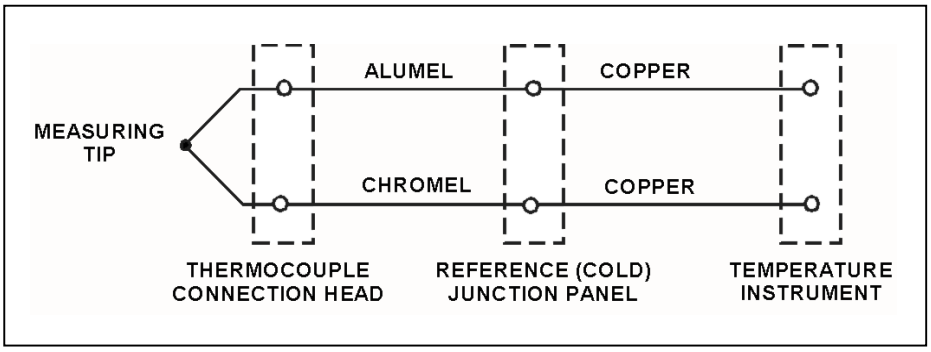

TOPIC: 291002
KNOWLEDGE: K1.15 [2.6/2.8]
QID: B6306 (P6305)

Refer to the drawing of a simple chromel-alumel thermocouple circuit (see figure below).

The thermocouple, thermocouple connection head, and reference junction panel are located inside a reactor building (RB) while the temperature instrument is located outside the RB. Thermocouple temperature indication is initially 440°F.

A steam leak inside the RB increases the temperatures of the thermocouple connection head and reference junction panel by 40°F, while the temperature at the measuring tip is unchanged. What is the resulting temperature indication?

A. 400°F

B. 440°F

C. 480°F

D. 520°F

ANSWER: A.

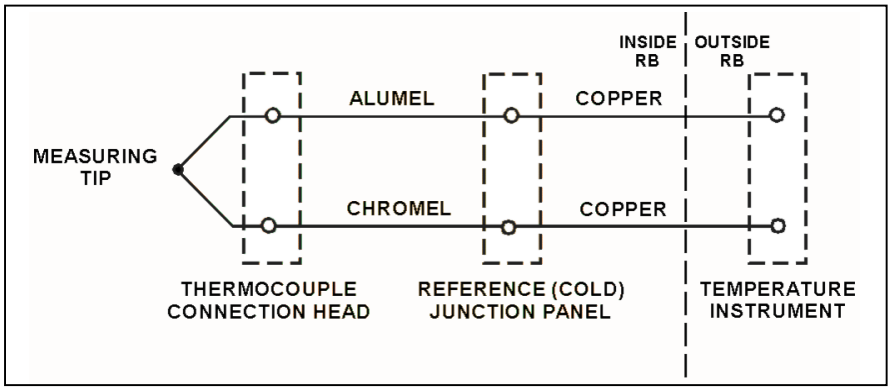

TOPIC: 291002
KNOWLEDGE: K1.15 [2.6/2.8]
QID: B6506 (P6504)

Because of a thermocouple temperature display failure, the millivolt output of a thermocouple circuit is being converted to a temperature value using conversion tables. The tables are based on a thermocouple reference junction temperature of 32°F. The actual reference junction is located in a panel that is maintained at 120°F. Room temperature surrounding the panel is 80°F.

What adjustment must be made to the temperature value taken from the conversion tables to calculate the actual temperature at the measuring tip of the thermocouple?

A. Add 48°F.

B. Subtract 48°F.

C. Add 88°F.

D. Subtract 88°F.

ANSWER: C.

TOPIC: 291002
KNOWLEDGE: K1.15 [2.6/2.8]
QID: B6905 (P6905)

A simple two-wire resistance temperature detector (RTD) is being used to measure the temperature of a water system. Copper extension wires run from the RTD to a temperature instrument 40 feet away. If the temperature of the extension wires decreases, the electrical resistance of the extension wires will _____; and the temperature indication will _____ unless temperature compensation is provided.

A. increase; increase

B. increase; decrease

C. decrease; increase

D. decrease; decrease

ANSWER: D.

TOPIC: 291002
KNOWLEDGE: K1.15 [2.6/2.8]
QID: B7106 (P7103)

A resistance temperature detector (RTD) and a thermocouple (TC) are commonly used sensors for temperature measurement. If a temperature display fails, which of the sensors, if any, has a property that can be measured manually and converted to a temperature value with the aid of conversion tables.

A. TC only.

B. RTD only.

C. Both TC and RTD.

D. Neither TC nor RTD.

ANSWER: C.

TOPIC: 291002
KNOWLEDGE: K1.15 [2.6/2.8]
QID: B7206 (P7205)

Because of a thermocouple temperature display failure, the millivolt output of a thermocouple circuit is being converted to a temperature value using conversion tables. The tables are based on a thermocouple reference junction temperature of 32°F. The actual reference junction is located in a panel that is currently at 80°F.

The temperature value taken from the conversion tables is 120°F.

What adjustment must be made to the temperature value taken from the conversion tables to calculate the actual temperature at the measuring tip of the thermocouple?

A. Add 48°F.

B. Subtract 48°F.

C. Add 88°F.

D. Subtract 88°F.

ANSWER: A.

TOPIC: 291002
KNOWLEDGE: K1.15 [2.6/2.8]
QID: B7405 (P7405)

Refer to the drawing of a simple thermocouple circuit (see figure below).

The measuring junction temperature is currently 300°F while the reference junction temperature is being held constant at 120°F. The thermocouple circuit is capable of indicating 32°F to 600°F and has just been calibrated at the current conditions.

If the measuring junction temperature decreases and stabilizes at 90°F, what temperature will be indicated?

A. 32°F

B. 60°F

C. 90°F

D. 120°F

ANSWER: C.

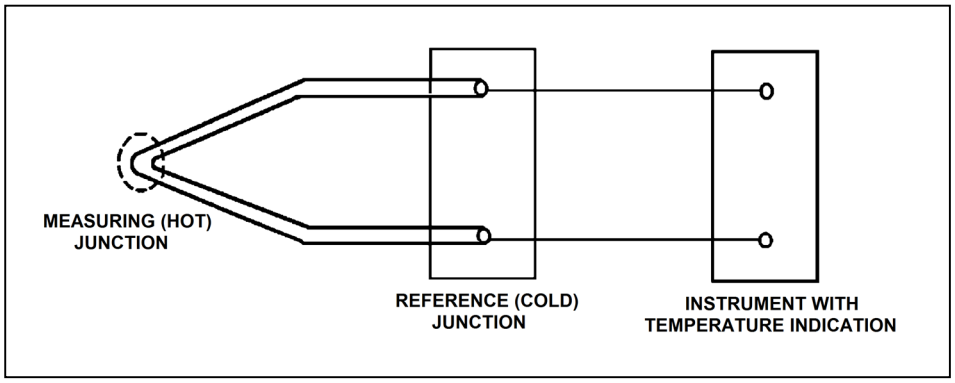

TOPIC: 291002
KNOWLEDGE: K1.15 [2.6/2.8]
QID: B7612 (P7612)

For proper operation of a thermocouple circuit, the reference junction temperature…

A. must be less than the measuring junction temperature.

B. must be greater than the measuring junction temperature.

C. may be less than, greater than, or equal to the measuring junction temperature.

D. may be less than or greater than, but not equal to, the measuring junction temperature.

ANSWER: C.

TOPIC: 291002
KNOWLEDGE: K1.15 [2.6/2.8]
QID: B7652 (P7652)

Because of a thermocouple temperature display failure, the millivolt output of a thermocouple circuit is being converted to a temperature value using conversion tables. The tables are based on a thermocouple reference junction temperature of 32°F. The actual reference junction is located in a panel that is maintained at 96°F. Room temperature surrounding the panel is 72°F.

What adjustment must be made to the temperature value taken from the conversion tables to calculate the actual temperature at the measuring tip of the thermocouple?

A. Add 64°F.

B. Subtract 64°F.

C. Add 40°F.

D. Subtract 40°F.

ANSWER: A.

TOPIC: 291002
KNOWLEDGE: K1.16 [2.5/2.7]
QID: B812 (P813)

What type of sensor is most commonly used to provide remote position indication of a valve that is normally either fully open or fully closed?

A. Limit switch

B. Reed switch

C. Servo transmitter

D. Linear variable differential transformer

ANSWER: A.

TOPIC: 291002
KNOWLEDGE: K1.16 [2.5/2.7]
QID: B1712 (P1313)

Which one of the following devices is commonly used to provide remote indication of valve position on an analog meter in units of "percent of full open"?

A. Limit switch

B. Reed switch

C. Linear variable differential transformer

D. Resistance temperature detector

ANSWER: C.

TOPIC: 291002
KNOWLEDGE: K1.16 [2.5/2.7]
QID: B2611

Reed switches are being used in an electrical measuring circuit to monitor the position of a control rod in a reactor. The reed switches are mounted in a column below the reactor vessel such that the control rod drive shaft passes by the reed switches as the control rod is withdrawn.

Which one of the following describes the action that causes the electrical output of the measuring circuit to change as the control rod is withdrawn?

A. An AC coil on the control rod drive shaft induces a voltage into each reed switch as the drive shaft passes by.

B. A metal tab on the control rod drive shaft mechanically closes each reed switch as the drive shaft passes by.

C. The primary and secondary coils of each reed switch attain maximum magnetic coupling as the drive shaft passes by.

D. A permanent magnet on the control rod drive shaft attracts the movable contact arm of each reed switch as the drive shaft passes by.

ANSWER: D.

TOPIC: 291002
KNOWLEDGE: K1.16 [2.5/2.7]
QID: B2811 (P2813)

Refer to the simplified drawing of a control rod position detector circuit (see figure below).

A magnet on the control rod extension (or drive) shaft sequentially closes individual reed switches mounted vertically adjacent to the control rod drive housing. A constant +5 DC volts is supplied to the input of the resistor network at resistor R_1.

A control rod is initially fully inserted such that all reed switch contacts are open; then the rod is withdrawn until reed switch contact S_1 is closed. Compared to the initial circuit currents, the current through resistor R_5 after the rod withdrawal will be _____; and the output current of the resistor network to the amplifier will be _____.

A. lower; higher

B. lower; lower

C. higher; higher

D. higher; lower

ANSWER: A.

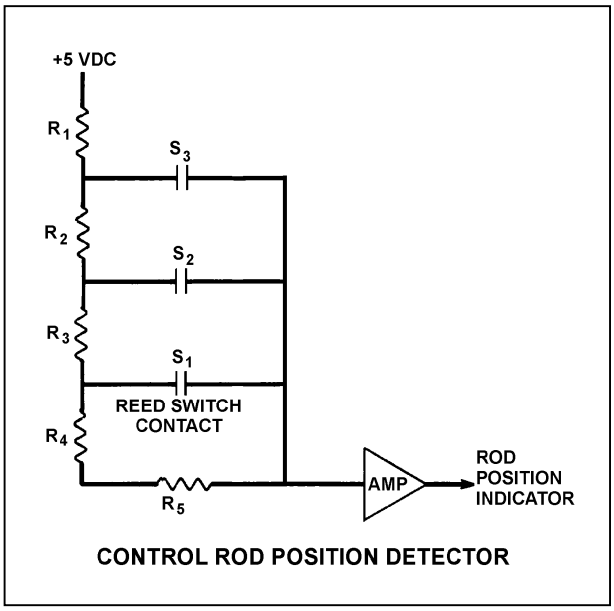

TOPIC: 291002
KNOWLEDGE: K1.19 [3.0/3.1]
QID: B213 (P214)

Most of the electrons collected in a fission chamber are released as a result of ionizations caused directly by...

A. fission fragments.

B. fission gammas.

C. fission betas.

D. fissionable materials.

ANSWER: A.

TOPIC: 291002
KNOWLEDGE: K1.19 [3.0/3.1]
QID: B612

Gamma radiation contributes to the output of a fission chamber mainly by interacting with the...

A. detector gas.

B. detector leads.

C. center electrode.

D. U-235 coating on the detector walls.

ANSWER: A.

TOPIC: 291002
KNOWLEDGE: K1.19 [3.0/3.1]
QID: B1113 (P1909)

What is the function of the positive electrode in an ion chamber?

A. Produce ions when exposed to a radiation field.

B. Release electrons to combine with positive ions.

C. Perform gas quenching to maximize detector sensitivity.

D. Collect the electrons released during gas ionization.

ANSWER: D.

TOPIC: 291002
KNOWLEDGE: K1.19 [3.0/3.1]
QID: B1214

Due to a loss-of-coolant accident, a reactor scram resulted. The source range monitors (SRMs) were inserted and are currently positioned in a water-filled region of the core.

If the SRMs are subsequently repositioned to a voided region of the core, the indicated count rate will _____; primarily due to a _____ in the voided region of the core.

A. decrease, smaller fast neutron flux

B. decrease, smaller thermal neutron flux

C. increase, larger fast neutron flux

D. increase, larger thermal neutron flux

ANSWER: B.

TOPIC: 291002
KNOWLEDGE: K1.19 [3.0/3.1]
QID: B2312

Following a loss-of-coolant accident, a reactor scram resulted. The source range monitors (SRMs) were inserted and are currently positioned in a voided region of the core.

If the SRMs are subsequently repositioned to a water-filled region of the core, the indicated count rate will _____; primarily due to a _____ in the water-filled region of the core.

A. decrease, smaller fast neutron flux

B. decrease, smaller thermal neutron flux

C. increase, larger fast neutron flux

D. increase, larger thermal neutron flux

ANSWER: D.

TOPIC: 291002
KNOWLEDGE: K1.19 [3.0/3.1]
QID: B3112

Fission chamber detectors are used to monitor reactor power/neutron level in a shutdown reactor as well as a reactor operating at rated power (and all power levels in between). At what power level(s) is it necessary to compensate the output of the fission chamber detectors for gamma interactions with the detectors and why?

A. At all power levels, because gamma interactions produce larger detector pulses than neutron interactions.

B. At all power levels, because gamma interactions produce smaller detector pulses than neutron interactions.

C. Only when shutdown or at low power levels, because gamma flux is <u>not</u> proportional to reactor power at low power levels.

D. Only when operating at high power levels, because gamma flux is <u>not</u> proportional to reactor power at high power levels.

ANSWER: C.

TOPIC: 291002
KNOWLEDGE: K1.19 [3.0/3.1]
QID: B7506

A loss-of-coolant accident resulted in a reactor scram. The source range monitors (SRMs) were fully inserted and are currently located in a voided section of the core.

If the SRMs are subsequently positioned below the core water level, the SRM count rate will…

A. decrease due to decreased neutron migration length.

B. decrease due to decreased thermal neutron flux.

C. increase due to increased neutron migration length.

D. increase due to increased thermal neutron flux.

ANSWER: D.

TOPIC: 291002
KNOWLEDGE: K1.21 [2.8/2.9]
QID: B513

A fission chamber used for reactor neutron monitoring is operating in the ionization region of the gas ionization curve. If the voltage supplied to the fission chamber is continuously increased, which one of the following operating regions will the detector enter next?

A. Proportional

B. Recombination

C. Geiger-Mueller

D. Limited proportional

ANSWER: A.

TOPIC: 291002
KNOWLEDGE: K1.21 [2.8/2.9]
QID: B713

A fission chamber neutron monitoring instrument is operating in the proportional region of the gas ionization curve. If the voltage supplied to the fission chamber is continuously decreased, which one of the following operating regions will the detector enter next?

A. Geiger-Mueller

B. Recombination

C. Limited proportional

D. Ionization

ANSWER: D.

TOPIC: 291002
KNOWLEDGE: K1.21 [2.8/2.9]
QID: B814 (P1812)

A gas-filled radiation detector operating in the proportional region is exposed to a constant gamma radiation field. If the applied voltage is increased but maintained within the proportional region, the rate of ion collection will...

A. increase, because more secondary ionizations are occurring in the detector.

B. increase, because fewer primary ions are recombining in the detector prior to reaching the electrodes.

C. stay approximately the same, because the ion chamber is operating at saturated conditions.

D. stay approximately the same, because all of the primary ions were already being collected at the lower voltage.

ANSWER: A.

TOPIC: 291002
KNOWLEDGE: K1.21 [2.8/2.9]
QID: B2413 (P2014)

What is the effect on a gas-filled neutron detector operating in the proportional region if the detector voltage is increased such that the detector operates closer to the high end of the proportional region?

A. Neutron-induced pulses will become so large that gamma pulse discrimination is no longer needed, yielding a more accurate neutron count rate.

B. The positive space charge effect will increase and prevent collection of both gamma- and neutron-induced pulses, yielding a less accurate neutron count rate.

C. A high rate of incident gamma radiation will result in the combination of multiple small gamma-induced pulses into larger pulses. The larger combined pulses will be counted as neutron-induced pulses, yielding a less accurate neutron count rate.

D. Detection of any single ionizing event will result in ionizing nearly the entire detector gas volume. The resulting large pulses will prevent the detector from differentiating between radiation types, yielding a less accurate neutron count rate.

ANSWER: C.

TOPIC: 291002
KNOWLEDGE: K1.21 [2.8/2.9]
QID: B2613 (P2313)

A gas-filled radiation detector operating in the proportional region is exposed to a constant gamma radiation field. If the applied voltage is decreased but maintained within the proportional region, the rate of ion collection will...

A. stay approximately the same, because all primary ions are collected as long as detector voltage remains in the proportional region.

B. stay approximately the same, because the detector is still operating at saturated conditions.

C. decrease, because a decreased space charge around the positive electrode reduces gas amplification.

D. decrease, because fewer secondary ionizations are occurring in the detector.

ANSWER: D.

TOPIC: 291002
KNOWLEDGE: K1.21 [2.8/2.9]
QID: B5607 (P5606)

A proportional detector with pulse height discrimination circuitry is being used in a constant field of neutron and gamma radiation to provide source range neutron count rate indication. Assume that the pulse height discrimination setpoint does not change.

If the detector voltage is increased but maintained within the proportional region, count rate indication will increase because...

A. a single neutron- or gamma-induced ionizing event will result in multiple pulses inside the detector.

B. the ratio of the number of neutron-induced pulses to gamma-induced pulses inside the detector will increase.

C. the positive space charge effect will increase and promote the collection of both gamma- and neutron-induced pulses.

D. all detector pulses will increase in amplitude and previously uncounted gamma pulses will be added to the total count rate.

ANSWER: D.

TOPIC: 291002
KNOWLEDGE: K1.22 [3.0/3.1]
QID: B511 (P1514)

A fission chamber neutron monitoring instrument is operating in the proportional region. If a complete loss of fission chamber gas pressure occurs, the instrument indication will fail...

A. upscale.

B. downscale.

C. as is.

D. to midscale.

ANSWER: B.

TOPIC: 291002
KNOWLEDGE: K1.22 [3.0/3.1]
QID: B613

Which one of the following will cause an upscale failure of a fission chamber neutron detector that is operating in the ion chamber region as a local power range monitor (LPRM)?

A. The detector electrode high voltage power supply output has decreased by 5 percent due to setpoint drift.

B. The detector chamber has become flooded with water due to leakage around the electrodes.

C. A power supply fuse in the amplifier circuit for the neutron monitoring instrument drawer has blown.

D. The uranium-235 in the detector coating has been transformed to uranium-236 by neutron absorption.

ANSWER: B.

TOPIC: 291002
KNOWLEDGE: K1.22 [3.0/3.1]
QID: B3414

Two identical fission chamber neutron detectors (operating in the proportional region) are being used to monitor the neutron flux during a reactor startup. Detector A has developed a tiny leak and the argon fill gas pressure has decreased to approximately 25 percent of the gas pressure in detector B. When the reactor reaches criticality, the neutron level indicated by detector A will be _____ than the neutron level indicated by detector B, primarily because the incident neutrons result in _____.

A. larger; more fissions in detector A

B. smaller; fewer fissions in detector A

C. larger; more ionizations in the detector A gas

D. smaller; fewer ionizations in the detector A gas

ANSWER: D.

TOPIC: 291002
KNOWLEDGE: K1.22 [3.0/3.1]
QID: B7007

Two identical fission chamber neutron detectors, operating in the proportional region, are being used to monitor core neutron flux during a reactor startup. Detector A has developed a small leak that caused its argon fill gas pressure to decrease to approximately 25 percent of the gas pressure in detector B. When the reactor reaches criticality, the neutron flux indication produced by detector B will be _____ than the neutron flux indication produced by detector A, primarily because the higher gas pressure in detector B results in _____.

A. greater; more neutron-induced fissions in detector B

B. smaller; fewer neutron-induced fissions in detector B

C. greater; more ionizations in the detector B fill gas

D. smaller; fewer ionizations in the detector B fill gas

ANSWER: C.

TOPIC: 291002
KNOWLEDGE: K1.23 [2.8/2.9]
QID: B313 (P2013)

A gas-filled radiation detector operating in the ion chamber is exposed to a constant gamma radiation field. If the applied voltage is increased but maintained within the ion chamber region, the rate of ion collection will...

A. increase, because more secondary ionizations are occurring in the detector.

B. stay approximately the same, because all of the primary ions were already being collected at the lower voltage.

C. increase, because fewer primary ions are recombining in the detector prior to reaching the electrodes.

D. stay approximately the same, because the ion chamber is operating at saturated conditions.

ANSWER: B.

TOPIC: 291002
KNOWLEDGE: K1.23 [2.8/2.9]
QID: B314 (P15)

Scintillation detectors convert radiation energy into light by a process known as...

A. gas amplification.

B. space charge effect.

C. luminescence.

D. photoionization.

ANSWER: C.

TOPIC: 291002
KNOWLEDGE: K1.23 [2.8/2.9]
QID: B414 (P2913)

Which one of the following statements describes the operation of a gas-filled radiation detector operating in the proportional region?

A. The number of ions collected from both primary and secondary ionizations is independent of the applied voltage.

B. Essentially all of the ions from primary ionizations are collected; the number of ions collected from secondary ionizations is independent of the applied voltage.

C. The number of ions collected from both primary and secondary ionizations varies directly with the applied voltage on a logarithmic scale.

D. Essentially all of the ions from primary ionizations are collected; the number of ions collected from secondary ionizations varies directly with the applied voltage on a logarithmic scale.

ANSWER: D.

TOPIC: 291002
KNOWLEDGE: K1.23 [2.8/2.9]
QID: B714 (P714)

Which one of the following types of radiation is the major contributor to the dose indication on a self-reading pocket dosimeter (SRPD)?

A. Alpha

B. Beta

C. Gamma

D. Neutron

ANSWER: C.

TOPIC: 291002
KNOWLEDGE: K1.23 [2.8/2.9]
QID: B913 (P1613)

Which one of the following describes a characteristic of a Geiger-Mueller radiation detector?

A. Radiation types can be identified by pulse height and duration.

B. Specific radionuclides can be identified with the use of gamma spectrometry.

C. Small variations in applied voltage will result in large changes in detector output.

D. Any type of radiation that ionizes the detector gas will produce the same magnitude detector output pulse.

ANSWER: D.

TOPIC: 291002
KNOWLEDGE: K1.23 [2.8/2.9]
QID: B1114 (P2613)

Which one of the following describes the reason for the high sensitivity of a gas-filled radiation detector operating in the Geiger-Mueller region?

A. Any radiation-induced ionization results in a large detector output pulse.

B. Geiger-Mueller detectors are longer than other types of radiation detectors, resulting in greater detector surface area.

C. The detector output is inversely proportional to the applied voltage within the Geiger-Mueller region.

D. High detector voltage allows differentiation between the various radiation types.

ANSWER: A.

TOPIC: 291002
KNOWLEDGE: K1.23 [2.8/2.9]
QID: B1514 (P1513)

Which one of the following lists the two types of gas-filled radiation detectors whose outputs will be <u>least</u> affected by a small variation (±10 volts) in the voltage applied to the detectors? (Assume the applied voltage remains within normal range.)

A. Limited proportional and Geiger-Mueller

B. Ion chamber and proportional

C. Proportional and limited proportional

D. Geiger-Mueller and ion chamber

ANSWER: D.

TOPIC: 291002
KNOWLEDGE: K1.23 [2.8/2.9]
QID: B1714 (P1713)

A Geiger-Mueller radiation detector is located in a radiation field consisting of beta, gamma, and fast neutron radiation. Assuming each type of radiation enters the detector gas chamber and ionizes the detector gas, which one of the following describes the resulting detector pulse sizes?

A. Beta radiation will produce a larger pulse size than either gamma or fast neutron radiation.

B. Gamma radiation will produce a larger pulse size than either beta or fast neutron radiation.

C. Fast neutron radiation will produce a larger pulse size than either beta or gamma radiation.

D. Beta, gamma, and fast neutron radiation will produce pulse sizes that are equal in magnitude.

ANSWER: D.

TOPIC: 291002
KNOWLEDGE: K1.23 [2.8/2.9]
QID: B2414 (P2413)

A gas-filled radiation detector operating in the ion chamber region is exposed to a constant gamma radiation field. If the applied voltage is decreased but maintained within the ion chamber region, the rate of ion collection will...

A. stay approximately the same, because all of the primary ions continue to be collected and essentially no secondary ionizations are occurring.

B. stay approximately the same, because detector operation in the ionization chamber region is characterized by complete ionization of the detector gas.

C. decrease, because fewer primary ionizations are occurring in the detector as detector voltage decreases.

D. decrease, because fewer secondary ionizations are occurring in the detector as detector voltage decreases.

ANSWER: A.

TOPIC: 291002
KNOWLEDGE: K1.23 [2.8/2.9]
QID: B3907 (P3906)

A beta particle and an alpha particle enter and cause ionization in a gas-filled radiation detector operating in the Geiger-Mueller region. Which one of the following accurately compares the amplitude of the detector pulses caused by each type of radiation?

A. The beta particle pulse will be larger in amplitude.

B. The alpha particle pulse will be larger in amplitude.

C. The pulses will be the same for both types of radiation.

D. Cannot be determined without particle kinetic energy information.

ANSWER: C.

TOPIC: 291002
KNOWLEDGE: K1.23 [2.8/2.9]
QID: B4507 (P4506)

A nuclear power plant has been shut down for one month. A portable gas-filled radiation detector is needed to monitor shutdown reactor core neutron level from a location outside the reactor vessel. The detector must be able to distinguish between ionizations caused by gamma and neutron radiation.

Which region(s) of the gas-filled detector characteristic curve is/are acceptable for operation of the detector?

A. Geiger-Mueller, Ion Chamber, and Proportional regions are all acceptable.

B. Proportional region is acceptable, and Ion Chamber region also may be usable.

C. Ion Chamber region is acceptable, and Geiger-Mueller region also may be usable.

D. Geiger-Mueller region is acceptable, and Proportional region also may be usable.

ANSWER: B.

TOPIC: 291002
KNOWLEDGE: K1.23 [2.8/2.9]
QID: B4807 (P4806)

Quench gases are added to gas-filled radiation detectors that operate in the _____ region; the quench gases prevent a single ionization event from causing _____ in the detector gas volume.

A. ion chamber; multiple discharges

B. ion chamber; secondary ionizations

C. Geiger-Mueller; multiple discharges

D. Geiger-Mueller; secondary ionizations

ANSWER: C.

TOPIC: 291002
KNOWLEDGE: K1.23 [2.8/2.9]
QID: B4907 (P4906)

Which one of the following contains the pair of radiation detector types that are the most sensitive to low-energy beta and/or gamma radiation?

A. Geiger-Mueller and scintillation

B. Geiger-Mueller and ion chamber

C. Ion chamber and scintillation

D. Ion chamber and proportional

ANSWER: A.

TOPIC: 291002
KNOWLEDGE: K1.23 [2.8/2.9]
QID: B5207 (P5206)

A beta particle and an alpha particle with equal kinetic energies cause ionization in a gas-filled radiation detector. The detector is operating in the ion chamber region of the gas ionization curve. Which one of the following describes the amplitudes of the detector pulses caused by each type of radiation?

A. The beta particle pulse will be larger in amplitude.

B. The alpha particle pulse will be larger in amplitude.

C. The amplitudes of both pulses will be approximately equal for all detector voltages in the ion chamber region.

D. The amplitudes of both pulses will be approximately equal for all detector voltages in the ion chamber region, as well as all detector voltages outside the ion chamber region.

ANSWER: B.

TOPIC: 291002
KNOWLEDGE: K1.23 [2.8/2.9]
QID: B5307 (P5306)

Which one of the following types of radiation detectors is generally <u>not</u> used for measuring a high-intensity beta and gamma radiation field because of a relatively long detector recovery time, or dead time, following each ionization event.

A. Geiger-Mueller

B. Ion chamber

C. Proportional

D. Scintillation

ANSWER: A.

TOPIC: 291002
KNOWLEDGE: K1.23 [2.8/2.9]
QID: B6007 (P6006)

Which one of the following types of radiation detectors uses a gas volume for radiation detection and will typically produce the weakest output signal if all of the detectors are placed in the same gamma radiation field?

A. Geiger-Mueller

B. Ion chamber

C. Proportional counter

D. Scintillation

ANSWER: B.

TOPIC: 291002
KNOWLEDGE: K1.23 [2.8/2.9]
QID: B6206 (P6206)

Which one of the following types of radiation detectors is typically the <u>least</u> accurate in determining the dose rate to a human body from an unspecified source of radiation?

A. Geiger-Mueller

B. Ion chamber

C. Proportional counter

D. Scintillation

ANSWER: A.

TOPIC: 291002
KNOWLEDGE: K1.23 [2.8/2.9]
QID: B6407 (P6405)

A fission chamber neutron detector is located in a constant neutron radiation field and is initially operating in the proportional region. If the voltage applied to the detector is changed such that the detector operates in the ion chamber region, the rate of neutron interactions in the detector will _____; and the amplitude of each neutron-induced detector pulse will _____.

A. increase; increase

B. decrease; decrease

C. remain the same; increase

D. remain the same; decrease

ANSWER: D.

TOPIC: 291002
KNOWLEDGE: K1.23 [2.8/2.9]
QID: B6507 (P6505)

Which one of the following describes the positive space charge effect associated with a gas-filled radiation detector?

A. Multiple detector pulses result from a single ionization event because positive ions form a cloud around the negative electrode, which increases the electric field strength, thereby initiating secondary ionizations.

B. Multiple detector pulses result from a single ionization event because positive ions form a cloud around the positive electrode, which increases the electric field strength, thereby initiating secondary ionizations.

C. The pulse amplitude resulting from an ionization event is reduced because positive ions form a cloud around the negative electrode, which reduces the electric field strength, thereby limiting secondary ionizations.

D. The pulse amplitude resulting from an ionization event is reduced because positive ions form a cloud around the positive electrode, which reduces the electric field strength, thereby limiting secondary ionizations.

ANSWER: D.

TOPIC: 291002
KNOWLEDGE: K1.23 [2.8/2.9]
QID: B6906 (P6906)

In which usable region(s) of the gas-filled detector ionization curve is the pulse height resulting from the detection of a 1 MeV beta particle the same as a 5 MeV alpha particle?

A. Geiger-Mueller only.

B. Geiger-Mueller and Ionization Chamber.

C. Proportional only.

D. Proportional and Ionization Chamber.

ANSWER: A.

TOPIC: 291002
KNOWLEDGE: K1.23 [2.8/2.9]
QID: B7207 (P7206)

Which one of the following personal radiation monitoring devices can be charged with DC voltage to "zero" the device prior to use?

A. Film badge

B. Alarming dosimeter

C. Thermoluminescent dosimeter

D. Self-reading pocket dosimeter

ANSWER: D.

TOPIC: 291002
KNOWLEDGE: K1.23 [2.8/2.9]
QID: B7507 (P7505)

A Geiger-Mueller detector with a "pancake" probe (often called a frisker) is being used to monitor personnel leaving a radiologically controlled area. The probe is equipped with a mica window.

Two individuals have radioactive skin contamination—one individual with only alpha emitters, and the other with only beta emitters. Both types of radiation are being emitted at the same rate. The same percentage of each type of radiation enters the probe's detection chamber and causes ionization.

Which one of the following describes the detector's count rate response to the alpha and beta radiation?

A. The count rate will be higher for the alpha radiation.

B. The count rate will be higher for the beta radiation.

C. The count rate will be the same for both types of radiation.

D. Cannot be determined without knowing the energy levels of the radiation.

ANSWER: C.

TOPIC: 291002
KNOWLEDGE: K1.23 [2.8/2.9]
QID: B7613 (P7613)

A proportional detector with pulse height discrimination circuitry is being used in a constant field of neutron and gamma radiation to provide source range neutron count rate indication. Assume the pulse height discrimination value does not change.

If the detector voltage is decreased significantly, but maintained within the proportional region, the detector count rate indication will _____; and the detector will become _____ susceptible to the positive space charge effect.

A. decrease; less

B. decrease; more

C. remain the same; less

D. remain the same: more

ANSWER: A.

TOPIC: 291002
KNOWLEDGE: K1.23 [2.8/2.9]
QID: B7662 (P7662)

A gas-filled radiation detector that operates in the Geiger-Mueller region of the gas ionization curve is being used in a constant radiation field. If the detector's operating voltage is increased by 50 volts while remaining in the Geiger-Mueller region, the detector's count rate indication will _____; and the ability of the detector to detect gamma radiation will _____.

A. increase; improve

B. increase; remain the same

C. remain the same; improve

D. remain the same; remain the same

ANSWER: D.

TOPIC: 291002
KNOWLEDGE: K1.23 [2.8/2.9]
QID: B7672 (P7672)

A proportional detector with pulse height discrimination circuitry is being used in a constant field of neutron and gamma radiation to provide source range neutron count rate indication. Assume the pulse height discrimination value does <u>not</u> change.

If the detector voltage is increased significantly, but maintained within the proportional region, the detector count rate indication will _____; and the detector will become _____ susceptible to the positive space charge effect.

A. increase; less

B. increase; more

C. remain the same; less

D. remain the same: more

ANSWER: B.

TOPIC: 291002
KNOWLEDGE: K1.23 [2.8/2.9]
QID: B7701 (P7701)

A fission chamber detector is initially operating in the proportional region to measure neutron flux in the source range. If the voltage applied to the detector is changed such that the detector is operating in the ion chamber region, the detector will produce _____ pulses; and will experience a _____ positive space charge effect.

A. larger; larger

B. larger; smaller

C. smaller; larger

D. smaller; smaller

ANSWER: D.

TOPIC: 291002
KNOWLEDGE: K1.24 [3.1/3.2]
QID: B214 (P216)

Which one of the following describes a characteristic of a self-reading pocket dosimeter (SRPD)?

A. The output of an SRPD is a dose rate in mR/hr.

B. SRPDs are primarily sensitive to beta radiation.

C. SRPD readings must be considered inaccurate when they are dropped.

D. SRPDs hold their charge indefinitely when removed from a radiation field.

ANSWER: C.

TOPIC: 291002
KNOWLEDGE: K1.24 [3.1/3.2]
QID: B5707 (P5706)

Which one of the following describes a characteristic of a self-reading pocket dosimeter?

A. Provides dose rate indication in mR/hr.

B. More sensitive to gamma radiation than beta radiation.

C. Contains crystals that luminesce when exposed to ionizing radiation.

D. Can be stored as an accurate record of lifetime radiation exposure.

ANSWER: B.

TOPIC: 291002
KNOWLEDGE: K1.24 [3.1/3.2]
QID: B6807 (P6806)

A nuclear plant worker normally wears a thermoluminescent dosimeter (TLD) or similar device for measuring radiation exposure. When a self-reading pocket dosimeter (SRPD) is also required, where will the SRPD be worn and why?

A. Below the waist near the TLD to measure radiation from the same source(s).

B. Below the waist away from the TLD to measure radiation from different sources.

C. Above the waist near the TLD to measure radiation from the same source(s).

D. Above the waist away from the TLD to measure radiation from different sources.

ANSWER: C.

TOPIC: 291002
KNOWLEDGE: K1.24 [3.1/3.2]
QID: B7633 (P7633)

A Geiger-Mueller detector with a "pancake" probe (often called a frisker) is being used to monitor workers leaving a radiologically controlled area for contamination. The probe is equipped with a mica window. The background detector count rate is 20 cpm.

As one individual's shoe is scanned, the detector reading increases to 200 cpm. When a sheet of paper is placed between the probe and the shoe, the detector reading decreases to 60 cpm. Which one of the following is indicated by the decrease in the detector reading?

A. The contamination contains beta particles.

B. The contamination contains alpha particles.

C. The contamination does <u>not</u> contain beta particles.

D. The contamination does <u>not</u> contain alpha particles.

ANSWER: B.

TOPIC: 291002
KNOWLEDGE: K1.24 [3.1/3.2]
QID: B7653 (P7653)

A Geiger Mueller detector with a "pancake" probe (sometimes called a frisker) is being used to monitor for skin contamination. During frisking, the probe is more likely to detect contamination if the probe is held _____ than one-half inch from the skin; and is moved _____ than two inches per second.

A. farther; faster

B. farther; slower

C. closer; faster

D. closer; slower

ANSWER: D.

TOPIC: 291002
KNOWLEDGE: K1.24 [3.1/3.2]
QID: B7691 (P7691)

A nuclear plant worker normally wears a thermoluminescent dosimeter (TLD) or similar device for measuring whole body radiation exposure. When a self-reading pocket dosimeter (SRPD) is also required for whole body monitoring, where will the SRPD be worn and why?

A. Near the TLD to add exposure to the TLD measurement.

B. Near the TLD to measure radiation affecting the same part of the body.

C. Away from the TLD to add exposure to the TLD measurement.

D. Away from the TLD to measure radiation affecting a different part of the body.

ANSWER: B.

TOPIC: 291003
KNOWLEDGE: K1.01 [3.5/3.7]
QID: B15

The difference between the setpoint and the measured parameter in an automatic flow controller is called...

A. gain.

B. bias.

C. error.

D. feedback.

ANSWER: C.

TOPIC: 291003
KNOWLEDGE: K1.01 [3.5/3.7]
QID: B215 (P217)

The range of values around the setpoint of a measured variable where <u>no</u> <u>action</u> occurs in an automatic flow controller is called...

A. deviation.

B. error.

C. deadband.

D. bias.

ANSWER: C.

TOPIC: 291003
KNOWLEDGE: K1.01 [3.5/3.7]
QID: B715 (P1615)

An automatic flow controller is being used to position a valve in a cooling water system. A signal that is proportional to valve position is received by the controller. This signal is referred to as...

A. gain.

B. bias.

C. feedback.

D. error.

ANSWER: C.

TOPIC: 291003
KNOWLEDGE: K1.01 [3.5/3.7]
QID: B1414 (P17)

The difference between the setpoint in an automatic controller and the steady-state value of the controlled parameter is called...

A. offset.

B. gain.

C. deadband.

D. feedback.

ANSWER: A.

TOPIC: 291003
KNOWLEDGE: K1.01 [3.5/3.7]
QID: B1516 (P1219)

The level in a tank is controlled by an automatic level controller. Level is initially at 50 percent when the tank develops a leak. When level decreases to 45 percent the level controller opens a makeup supply valve. After a few minutes, level is 55 percent and the makeup valve closes. With the leak still in progress, level continuously oscillates between 45 percent and 55 percent as the makeup valve opens and closes.

The controller in this system uses primarily _____ control.

A. bistable

B. proportional

C. integral

D. derivative

ANSWER: A.

TOPIC: 291003
KNOWLEDGE: K1.01 [3.5/3.7]
QID: B1616 (P1518)

Which one of the following terms is used to describe the delay between a process parameter change and the sensing of that change by the process controller?

A. Offset

B. Gain

C. Dead time

D. Time constant

ANSWER: C.

TOPIC: 291003
KNOWLEDGE: K1.01 [3.5/3.7]
QID: B1817 (P715)

An automatic flow controller is being used to position a valve in a cooling water system. The controller develops a flow error signal and then increases the magnitude of the signal to drive the valve operator.

The factor by which the magnitude of the flow error signal is increased is referred to as...

A. bias.

B. gain.

C. feedback.

D. offset.

ANSWER: B.

TOPIC: 291003
KNOWLEDGE: K1.01 [3.5/3.7]
QID: B2115 (P918)

In a proportional controller, the term "offset" refers to the difference between the...

A. control point and setpoint.

B. control point and proportional band.

C. deadband and setpoint.

D. deadband and proportional band.

ANSWER: A.

TOPIC: 291003
KNOWLEDGE: K1.01 [3.5/3.7]
QID: B3715 (P3715)

A flow controller has proportional, integral, and derivative control features. Which one of the following lists the effect on the control features when the controller is switched from the automatic mode to the manual mode?

A. Only the derivative feature will be lost.

B. Only the integral and derivative features will be lost.

C. All proportional, integral, and derivative features will be lost.

D. All control features will continue to influence the controller output.

ANSWER: C.

TOPIC: 291003
KNOWLEDGE: K1.01 [3.5/3.7]
QID: B5608 (P5607)

Consider a direct-acting proportional flow controller that is maintaining flow rate at a value that is offset from the controller setpoint. If the controller's gain is increased, the controller's offset will _____; and the controller's proportional band will _____.

A. decrease; decrease

B. decrease; increase

C. increase; decrease

D. increase; increase

ANSWER: A.

TOPIC: 291003
KNOWLEDGE: K1.01 [3.5/3.7]
QID: B6108 (P6107)

Consider a direct-acting proportional flow controller that is maintaining flow rate at a value that is offset from the controller setpoint. If the controller's gain is decreased, the controller's offset will _____; and the controller's proportional band will _____.

A. decrease; decrease

B. decrease; increase

C. increase; decrease

D. increase; increase

ANSWER: D.

TOPIC: 291003
KNOWLEDGE: K1.02 [3.5/3.6]
QID: B3115 (P218)

An emergency diesel generator (DG) is operating as the only power source connected to an emergency bus. The governor of the DG is <u>directly</u> sensing DG _____ and will <u>directly</u> adjust DG _____ flow to maintain a relatively constant DG frequency.

A. speed; air

B. speed; fuel

C. load; air

D. load; fuel

ANSWER: B.

TOPIC: 291003
KNOWLEDGE: K1.03 [3.3/3.4]
QID: B1317 (P818)

The water level in a tank is being controlled by an automatic level controller and is initially at the controller setpoint. A drain valve is then opened, causing tank level to decrease. The decreasing level causes the controller to begin to open a makeup water supply valve. After a few minutes, a new steady-state tank level below the original level is established, with the supply rate equal to the drain rate.

The controller in this system uses _____ control.

A. proportional, integral, and derivative

B. proportional and integral only

C. proportional only

D. bistable

ANSWER: C.

TOPIC: 291003
KNOWLEDGE: K1.03 [3.3/3.4]
QID: B2215 (P1417)

Which one of the following controller types is designed to control the measured parameter at the controller setpoint?

A. Integral

B. Proportional

C. On-Off

D. Derivative

ANSWER: A.

TOPIC: 291003
KNOWLEDGE: K1.03 [3.3/3.4]
QID: B2315 (P2319)

The level in a drain collection tank is being controlled by an automatic level controller and is initially stable at the controller setpoint. Flow rate into the tank increases, causing tank level to increase. The increasing level causes the controller to throttle open a tank drain valve. After a few minutes, a new stable tank level above the original level is established, with the drain flow rate equal to the supply flow rate.

The controller in this system uses _____ control.

A. on-off

B. proportional

C. proportional plus integral

D. proportional plus integral plus derivative

ANSWER: B.

TOPIC: 291003
KNOWLEDGE: K1.03 [3.3/3.4]
QID: B2415 (P2419)

The level in a drain collection tank is being controlled by an automatic level controller and level is initially at the controller setpoint. Flow rate into the tank causes tank level to increase. The increasing level causes the controller to fully open a tank drain valve. When level decreases below the setpoint, the controller closes the drain valve. Tank level continues to be controlled in this manner within a narrow band above and below the setpoint.

The controller in this system uses _____ control.

A. on-off

B. proportional

C. proportional plus integral

D. proportional plus integral plus derivative

ANSWER: A.

TOPIC: 291003
KNOWLEDGE: K1.03 [3.3/3.4]
QID: B2815 (P2819)

The level in a water collection tank is being controlled by an automatic level controller that positions a tank drain valve. Tank level is initially stable at the controller setpoint. Then, flow rate into the tank increases, slowly at first, and then faster until a stable flow rate is attained.

When tank level increases, the controller begins to open the tank drain valve farther. The level controller output signal increases both as the tank level increases and as the rate of the tank level change quickens. After a few minutes, a new stable tank level above the original level is established, with the drain flow rate equal to the supply flow rate.

The controller in this system uses _____ control.

A. proportional only

B. proportional plus integral

C. proportional plus derivative

D. proportional plus integral plus derivative

ANSWER: C.

TOPIC: 291003
KNOWLEDGE: K1.03 [3.3/3.4]
QID: B3116 (P2919)

The level in a drain collection tank is being controlled by an automatic level controller, and is initially stable at the controller setpoint. Flow rate into the tank increases, slowly at first, and then faster until a stable higher flow rate is attained.

As tank level begins to increase, the level controller slowly opens a tank drain valve. The level controller output signal increases both as the tank level increases and as the rate of tank level change quickens. After a few minutes, tank level returns to, and remains at, the original level with the drain flow rate equal to the supply flow rate.

The controller in this system uses _____ control.

A. proportional only

B. proportional plus derivative only

C. proportional plus integral only

D. proportional plus integral plus derivative

ANSWER: D.

TOPIC: 291003
KNOWLEDGE: K1.03 [3.3/3.4]
QID: B3316 (P3319)

Refer to the drawing of a water storage tank with a level control system (see figure below). The tank water level is being automatically controlled at 50 percent by a proportional-integral (PI) controller that positions the drain valve. Tank water level is currently stable with 500 gpm entering the tank and the drain valve is 50 percent open.

Tank inlet flow rate suddenly increases to 700 gpm and remains constant. When tank water level stabilizes, level will be _____; and the drain valve position will be _____.

A. higher than 50 percent; more open

B. higher than 50 percent; the same

C. 50 percent; more open

D. 50 percent; the same

ANSWER: C.

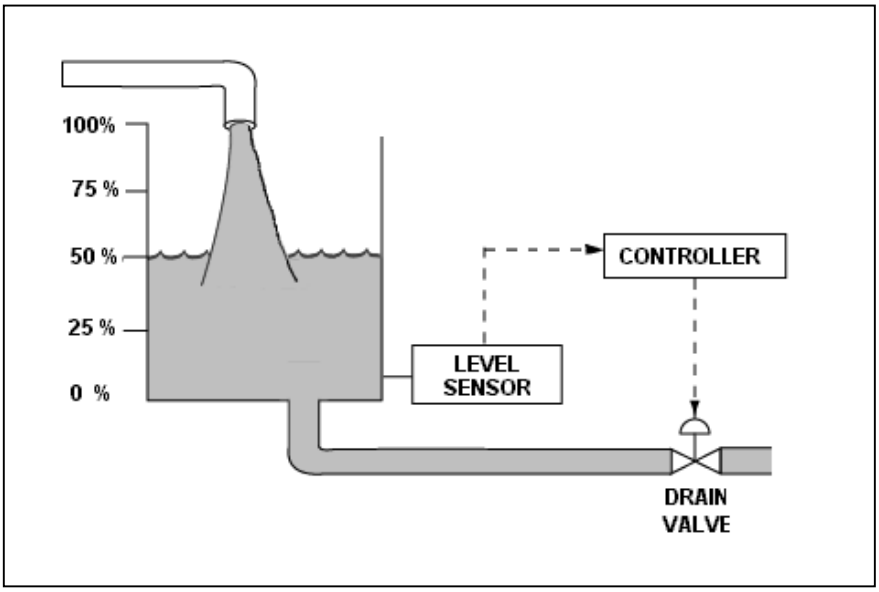

TOPIC: 291003
KNOWLEDGE: K1.03 [3.3/3.4]
QID: B3415 (P3419)

Refer to the drawing of a water storage tank with a level control system (see figure below). The tank water level is being automatically controlled at 50 percent by a proportional-integral (PI) controller that positions the drain valve. Tank water level is currently stable with 500 gpm entering the tank and the drain valve is 50 percent open.

The tank suddenly develops a constant 200 gpm leak, while the input flow rate remains constant at 500 gpm. When tank water level stabilizes, level will be _____; and the drain valve position will be _____.

A. 50 percent; more open

B. 50 percent; more closed

C. lower than 50 percent; more open

D. lower than 50 percent; more closed

ANSWER: B.

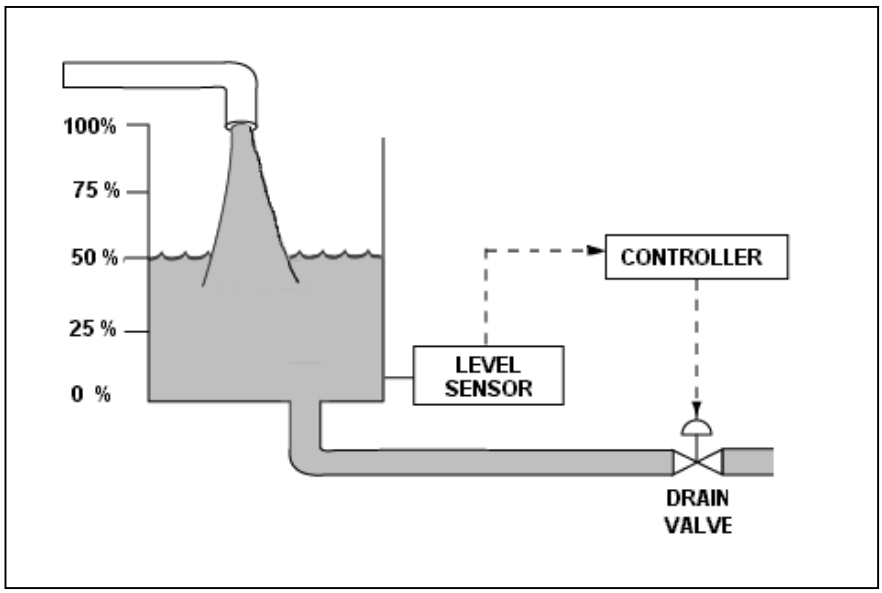

TOPIC: 291003
KNOWLEDGE: K1.03 [3.3/3.4]
QID: B3515 (P3519)

Refer to the drawing of a water storage tank with a level control system (see figure below).

The tank water level is being automatically controlled by a proportional-only controller with a setpoint of 50 percent. Tank water level is currently stable at 50 percent with 500 gpm entering the tank and the drain valve is 50 percent open.

The tank suddenly develops a 200 gpm leak, while the input flow rate remains constant at 500 gpm. After the tank water level stabilizes, level will be _____; and the drain valve position will be _____.

A. 50 percent; more than 50 percent open

B. 50 percent; less than 50 percent open

C. below 50 percent; more than 50 percent open

D. below 50 percent; less than 50 percent open

ANSWER: D.

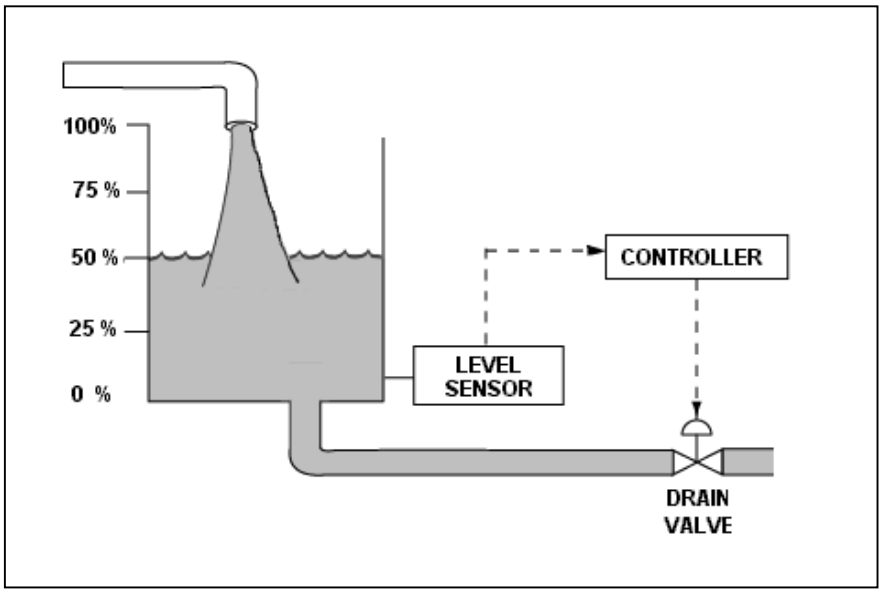

TOPIC: 291003
KNOWLEDGE: K1.03 [3.3/3.4]
QID: B3616 (P3617)

Refer to the drawing of a water storage tank with an automatic level control system (see figure below).

Given:

- The drain valve fails open on loss of controller output signal.
- The level sensor output signal changes directly with tank water level.

For proper automatic control of tank water level, the controller must be _____; and the control loop must be _____.

A. direct-acting; open

B. direct-acting; closed

C. reverse-acting; open

D. reverse-acting; closed

ANSWER: D.

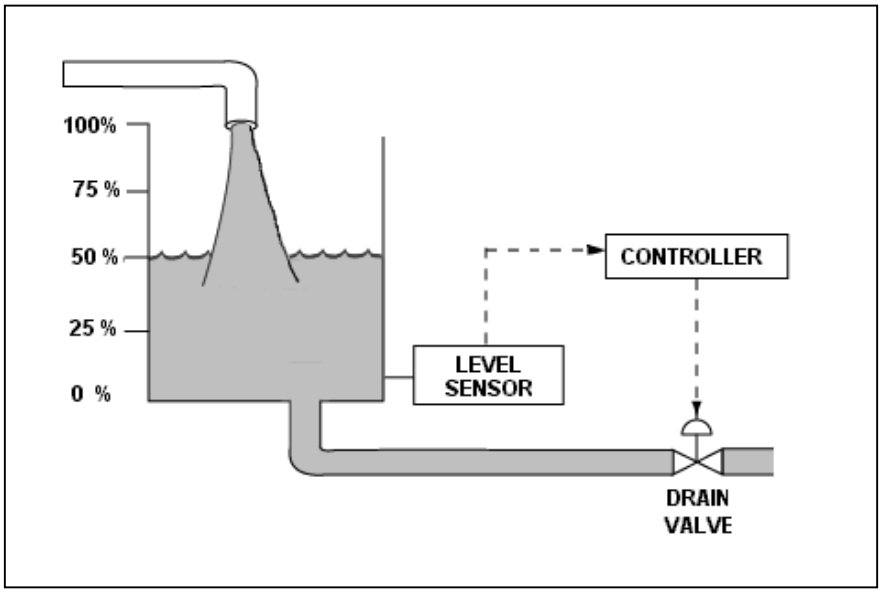

TOPIC: 291003
KNOWLEDGE: K1.03 [3.3/3.4]
QID: B3816 (P3818)

Refer to the drawing of a water storage tank with a level control system (see figure below).

The tank water level is being automatically controlled by a proportional-only controller with a level setpoint of 50 percent. Tank water level is currently stable at 50 percent with 500 gpm entering the tank and the drain valve is 50 percent open.

The tank input flow rate suddenly increases to 700 gpm. After the tank water level stabilizes, level will be _____; and the drain valve position will be _____.

A. 50 percent; more than 50 percent open

B. 50 percent; 50 percent open

C. above 50 percent; more than 50 percent open

D. above 50 percent; 50 percent open

ANSWER: C.

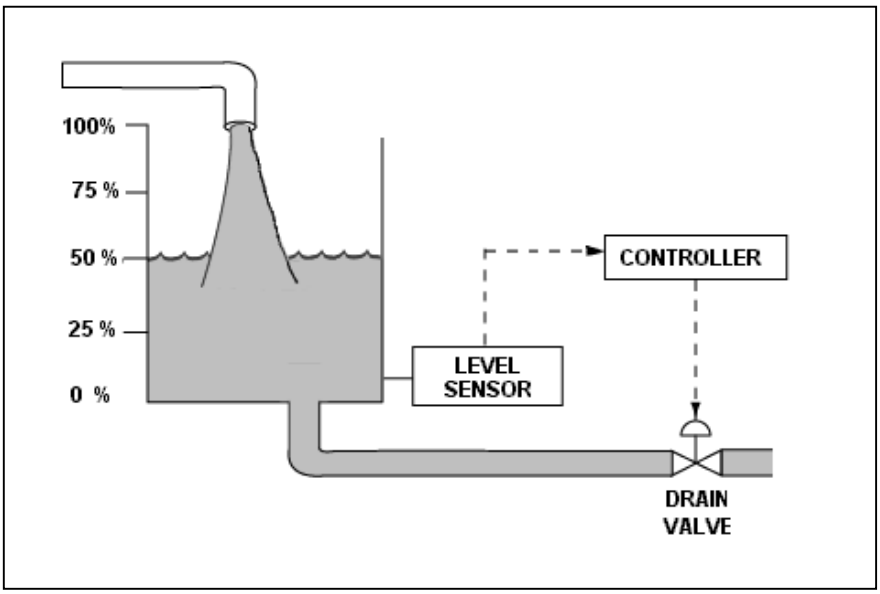

TOPIC: 291003
KNOWLEDGE: K1.03 [3.3/3.4]
QID: B4108 (P4109)

Refer to the drawing of a water storage tank with an automatic level control system (see figure below).

Given:

- The drain valve fails closed on loss of controller output signal.
- The level sensor output signal changes directly with tank water level.

For proper automatic control of tank water level, the controller must be _____; and the control loop must be _____.

A. direct-acting; open

B. direct-acting; closed

C. reverse-acting; open

D. reverse-acting; closed

ANSWER: B.

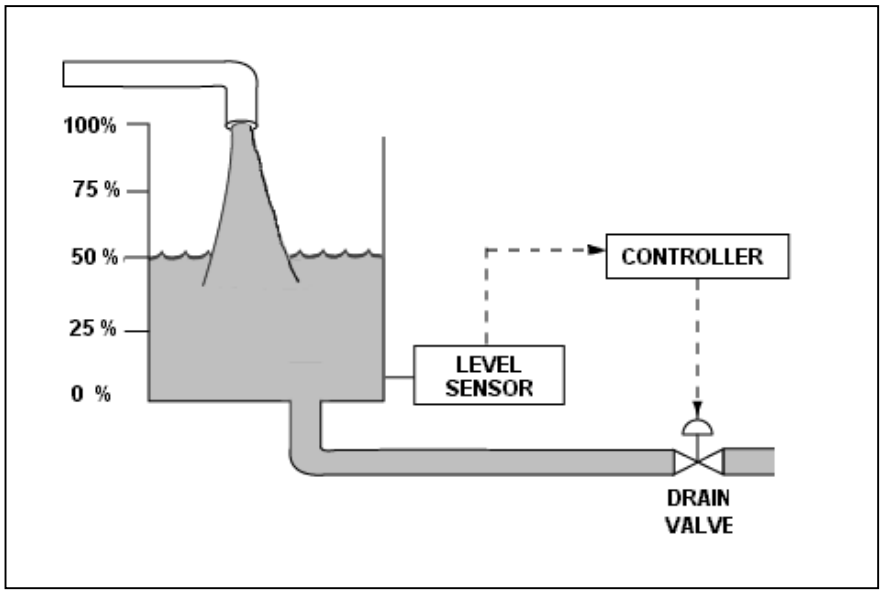

TOPIC: 291003
KNOWLEDGE: K1.03 [3.3/3.4]
QID: B4408 (P4408)

The water level in a water storage tank is being controlled by an automatic bistable level controller. If water level increases to 70 percent, the controller bistable turns on to open a tank drain valve. When water level decreases to 60 percent, the controller bistable turns off to close the drain valve.

Which one of the following bistable symbols indicates the characteristics of the bistable used in the level controller?

A. 1.

B. 2.

C. 3.

D. 4.

ANSWER: D.

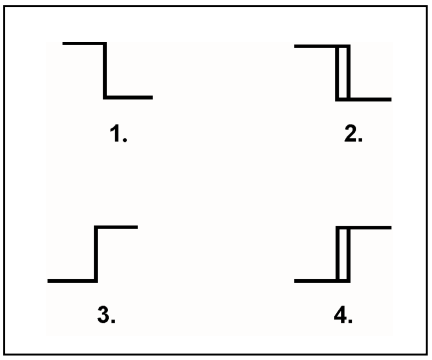

TOPIC: 291003
KNOWLEDGE: K1.03 [3.3/3.4]
QID: B4708 (P4707)

Refer to the valve controller logic diagram (see figure below).

Which one of the following combinations of inputs will result in the valve receiving an OPEN signal?

	INPUTS			
	1.	2.	3.	4.
A.	On	Off	Off	On
B.	Off	On	On	Off
C.	On	Off	On	Off
D.	Off	On	Off	On

ANSWER: B.

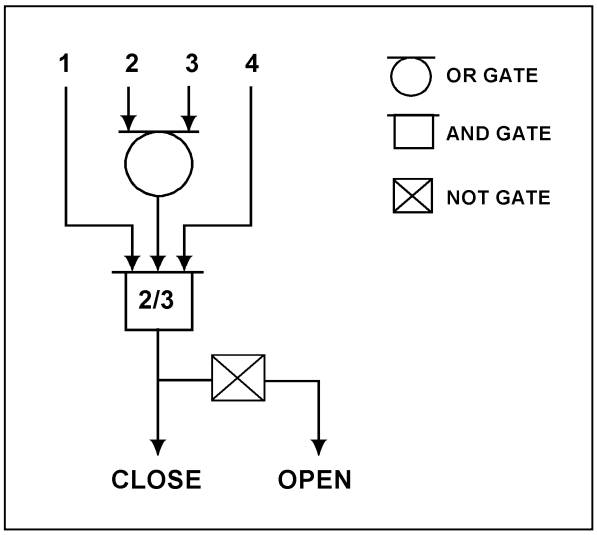

TOPIC: 291003
KNOWLEDGE: K1.03 [3.3/3.4]
QID: B4908 (P4909)

The water level in a water storage tank is being controlled by an automatic bistable level controller. If water level increases to 70 percent, the controller bistable turns off to open a tank drain valve. When water level decreases to 60 percent, the controller bistable turns on to close the drain valve.

Which one of the following bistable symbols indicates the characteristics of the bistable used in the level controller?

A. 1.

B. 2.

C. 3.

D. 4.

ANSWER: B.

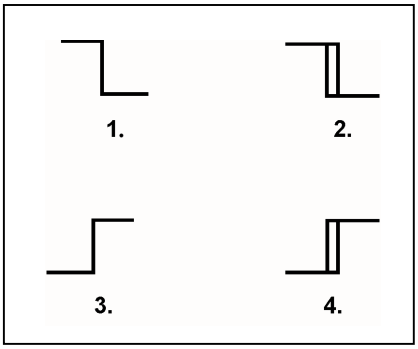

TOPIC: 291003
KNOWLEDGE: K1.03 [3.3/3.4]
QID: B5009 (P5009)

Refer to the valve controller logic diagram (see figure below).

Which one of the following combinations of inputs will result in the valve receiving a CLOSE signal?

	INPUTS			
	1.	2.	3.	4.
A.	On	On	Off	Off
B.	Off	Off	On	Off
C.	On	Off	Off	On
D.	On	On	On	Off

ANSWER: B.

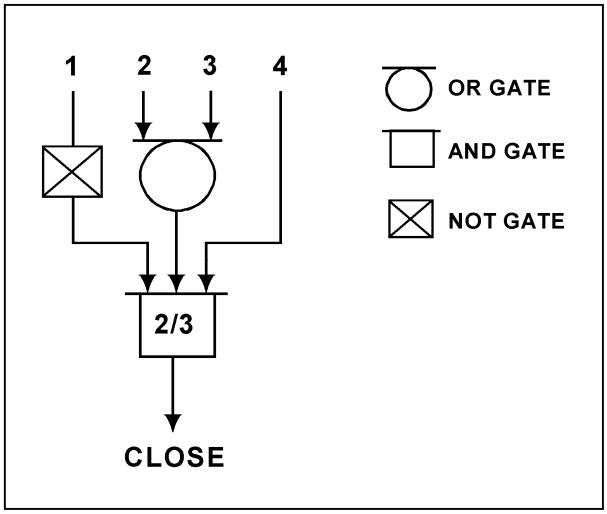

TOPIC: 291003
KNOWLEDGE: K1.03 [3.3/3.4]
QID: B5408 (P5409)

Refer to the valve controller logic diagram (see figure below).

Which one of the following combinations of inputs will result in the valve receiving an OPEN signal?

	INPUTS			
	1.	2.	3.	4.
A.	On	Off	On	On
B.	Off	On	Off	Off
C.	On	Off	Off	On
D.	Off	On	On	Off

ANSWER: B.

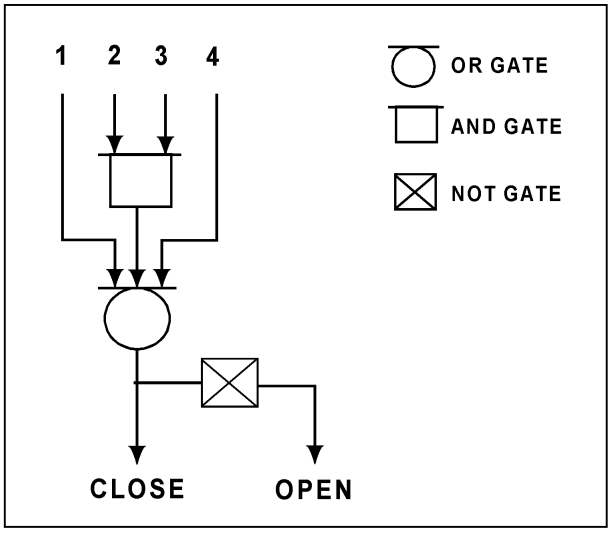

TOPIC: 291003
KNOWLEDGE: K1.03 [3.3/3.4]
QID: B5808 (P5809)

A reverse-acting proportional controller will be used to maintain level in a water storage tank by positioning an air-operated makeup water flow control valve.

Which pair of flow control valves shown below will be compatible with the controller in the above application?

A. A and B

B. B and C

C. C and D

D. D and A

ANSWER: B.

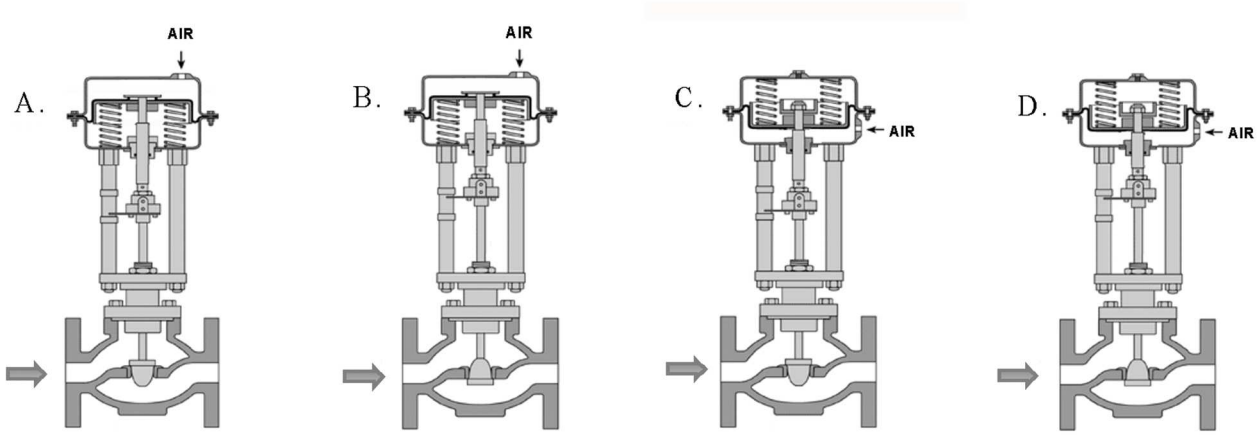

TOPIC: 291003
KNOWLEDGE: K1.03 [3.3/3.4]
QID: B6309 (P6309)

Given:

- A direct-acting proportional pneumatic controller will be used to maintain level in a condensate collection tank by positioning an air-operated flow control valve in the tank's drain line.
- The controller's input will vary directly with tank condensate level.

Which pair of flow control valves shown below will be compatible with the controller in the above application?

A. A and B

B. B and C

C. C and D

D. D and A

ANSWER: B.

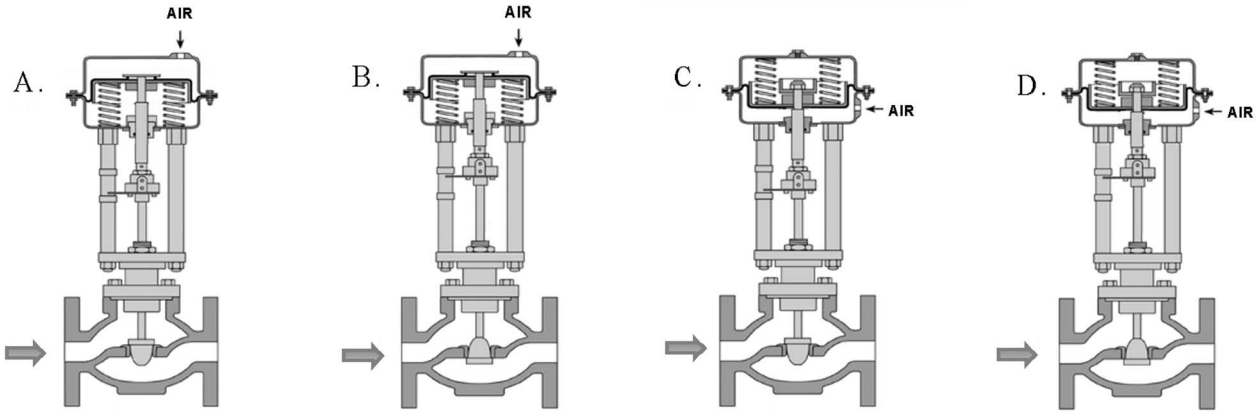

TOPIC: 291003
KNOWLEDGE: K1.03 [3.3/3.4]
QID: B6808 (P6809)

Refer to the logic diagram for a valve controller (see figure below).

Which one of the following combinations of inputs will result in the valve receiving a CLOSE signal?

	INPUTS			
	1	2	3	4
A.	On	On	On	On
B.	Off	On	On	On
C.	On	Off	Off	Off
D.	Off	On	On	Off

ANSWER: B.

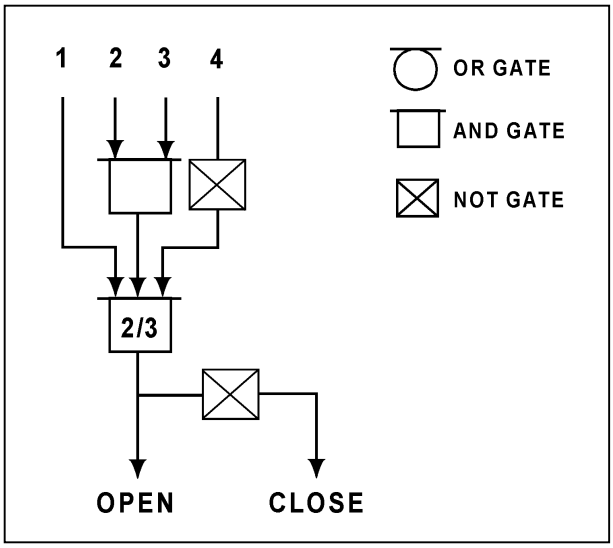

TOPIC: 291003
KNOWLEDGE: K1.03 [3.3/3.4]
QID: B7008 (P7007)

Refer to the drawing of a lube oil temperature control system (see figure below).

A direct-acting proportional temperature controller is being used to control the heat exchanger lube oil outlet temperature. When the lube oil outlet temperature matches the controller setpoint of 90°F, the controller output signal is 50 percent.

Current lube oil outlet temperature is stable at 100°F with the controller output signal at 70 percent.

What is the temperature proportional band for this controller?

A. 90°F to 140°F

B. 90°F to 115°F

C. 65°F to 140°F

D. 65°F to 115°F

ANSWER: D.

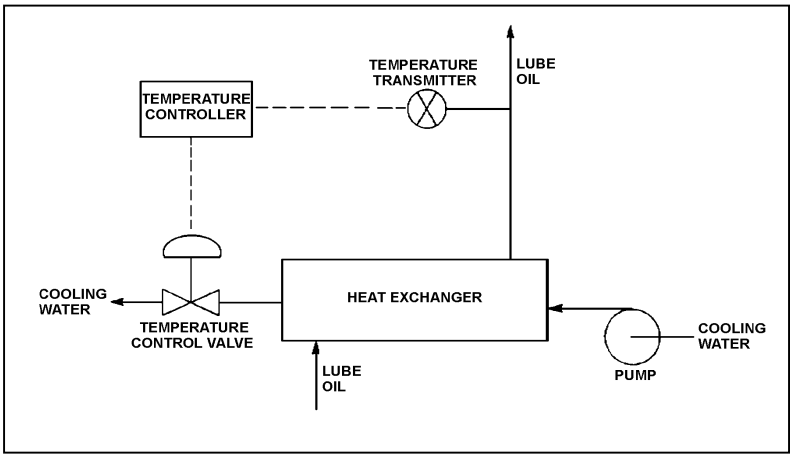

TOPIC: 291003
KNOWLEDGE: K1.03 [3.3/3.4]
QID: B7108 (P7109)

Given:

- A direct-acting proportional pneumatic controller will be used to maintain level in a water storage tank by positioning an air-operated flow control valve in the tank's makeup water supply line.
- The controller's input will vary directly with tank level.

Which pair of flow control valves shown below will be compatible with the controller in the above application?

A. A and B

B. B and C

C. C and D

D. D and A

ANSWER: D.

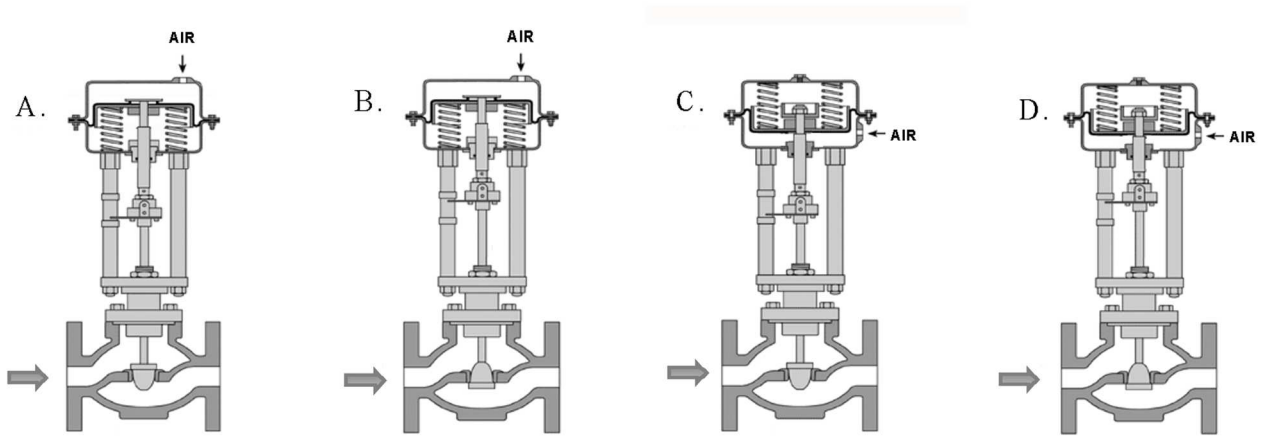

TOPIC: 291003
KNOWLEDGE: K1.03 [3.3/3.4]
QID: B7109 (P7108)

The level in a condensate collection tank is being controlled by an automatic level controller using proportional-only control. Initially the tank level is stable, but then the flow into the tank increases and stabilizes at a higher flow rate.

As tank level increases, the controller positions a drain valve more open than necessary to stabilize the level. As tank level decreases, the controller positions the drain valve more closed than necessary to stabilize the level. This cycle is repeated continuously, never reaching a stable tank level or drain valve position.

The excessive valve positioning described above could be caused by the controller's gain being too _____; or by the controller's proportional band being too _____.

A. low; wide

B. low; narrow

C. high; wide

D. high; narrow

ANSWER: D.

TOPIC: 291003
KNOWLEDGE: K1.03 [3.3/3.4]
QID: B7309 (P7309)

A proportional controller is being used to control the water level in a tank. When the tank water level matches the controller setpoint of 50 percent, the controller output signal is 50 percent.

Tank water level begins to rise and the controller stabilizes the water level at 60 percent, at which time the controller output signal is 90 percent.

What is the offset for this controller at the 60 percent tank water level?

A. 10 percent

B. 30 percent

C. 40 percent

D. 67 percent

ANSWER: A.

TOPIC: 291003
KNOWLEDGE: K1.03 [3.3/3.4]
QID: B7508 (P7509)

Refer to the drawing of a flow control valve (see figure below) that is located in the makeup water supply line to a water storage tank.

The flow control valve is positioned by a tank level controller that can maintain a stable water level anywhere between 10 percent above and 10 percent below the controller setpoint.

Which one of the following describes the characteristics of the tank level controller?

A. Direct acting with proportional only control.

B. Direct acting with proportional plus integral control.

C. Reverse acting with proportional only control.

D. Reverse acting with proportional plus integral control.

ANSWER: C.

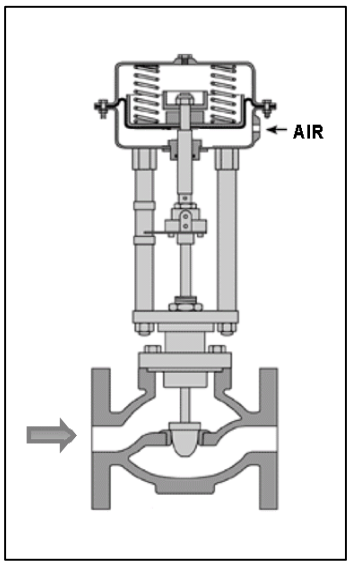

TOPIC: 291003
KNOWLEDGE: K1.03 [3.3/3.4]
QID: B7603 (P7603)

The water level in a tank is being controlled by an automatic level controller using proportional-only control as shown in the figure below. Initially the tank level is stable at 50 percent, but then the flow into the tank increases and stabilizes at a higher flow rate.

As tank level increases, the controller positions the drain valve more open than necessary to stabilize the level. As tank level decreases, the controller positions the drain valve more closed than necessary to stabilize the level. This cycle is repeated continuously, never reaching a stable tank level or drain valve position.

The excessive valve cycling described above can be reduced if the controller's gain is _____ or if the controller's proportional band is _____.

A. increased; widened

B. increased; narrowed

C. decreased; widened

D. decreased; narrowed

ANSWER: C.

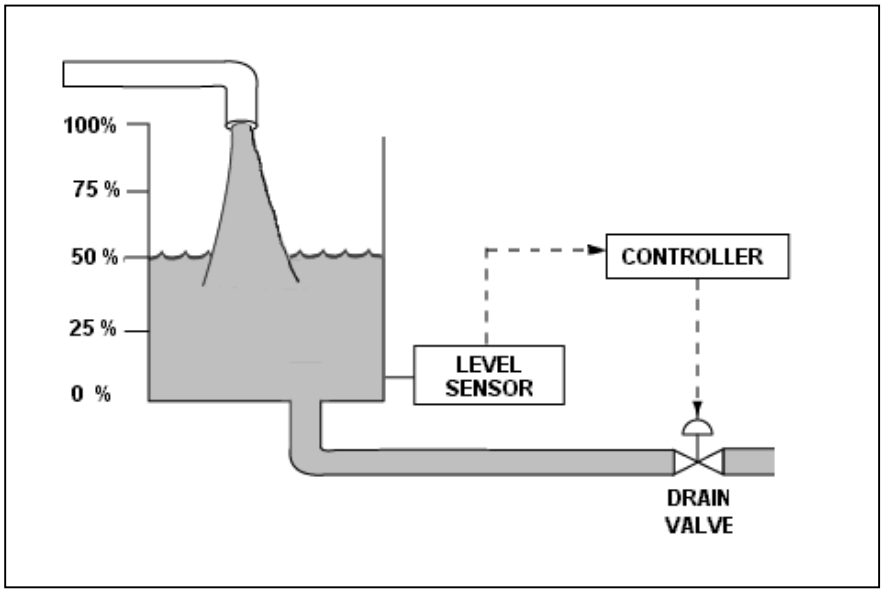

TOPIC: 291003
KNOWLEDGE: K1.03 [3.3/3.4]
QID: B7622 (P7623)

A proportional controller is being used to control the water level in a tank. When the tank water level matches the controller setpoint of 20 feet, the controller output is 50 percent.

Tank water level is currently stable at 25 feet with the controller output at 75 percent.

What is the tank water level proportional band for this controller?

A. 10 to 30 feet

B. 10 to 40 feet

C. 20 to 30 feet

D. 20 to 40 feet

ANSWER: A.

TOPIC: 291003
KNOWLEDGE: K1.03 [3.3/3.4]
QID: B7663 (P7663)

A proportional controller is being used to control the water level in a tank. Initially, the controller input and output signals are both stable at 50 percent of their full range. If the controller input signal increases to 60 percent, the controller output signal will increase to 90 percent.

What is the gain for this controller?

A. 0.25

B. 0.5

C. 2.0

D. 4.0

ANSWER: D.

TOPIC: 291003
KNOWLEDGE: K1.03 [3.3/3.4]
QID: B7673 (P7673)

Which one of the following is a characteristic that applies to a proportional-only controller, but not to a proportional-integral controller?

A. Gain

B. Offset

C. Rate component

D. Bistable component

ANSWER: B.

TOPIC: 291003
KNOWLEDGE: K1.03 [3.4/3.5]
QID: B7682 (P7682)

Refer to the logic diagram for a valve controller (see figure below).

Which one of the following combinations of flow rate (F), level (L), pressure (P), and temperature (T) inputs will result in the valve receiving a CLOSE signal? (The options below indicate whether the parameters are higher or lower than the associated bistable setpoints.)

INPUTS

	F	L	P	T
A.	Higher	Higher	Lower	Higher
B.	Lower	Lower	Higher	Lower
C.	Higher	Lower	Lower	Higher
D.	Lower	Higher	Higher	Lower

ANSWER: A.

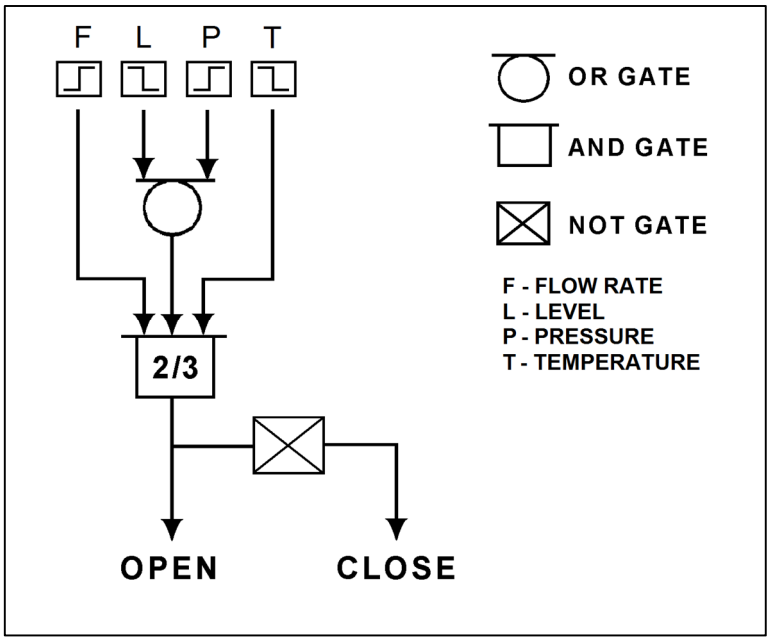

TOPIC: 291003
KNOWLEDGE: K1.03 [3.3/3.3]
QID: B7692 (P7693)

Given:

A reverse-acting proportional pneumatic controller will be used to maintain level in a water storage tank by positioning an air-operated flow control valve in the tank's drain line. The controller's input will vary directly with tank level.

Which pair of flow control valves shown below will be compatible with the controller in the above application?

A. A and B

B. B and C

C. C and D

D. D and A

ANSWER: D.

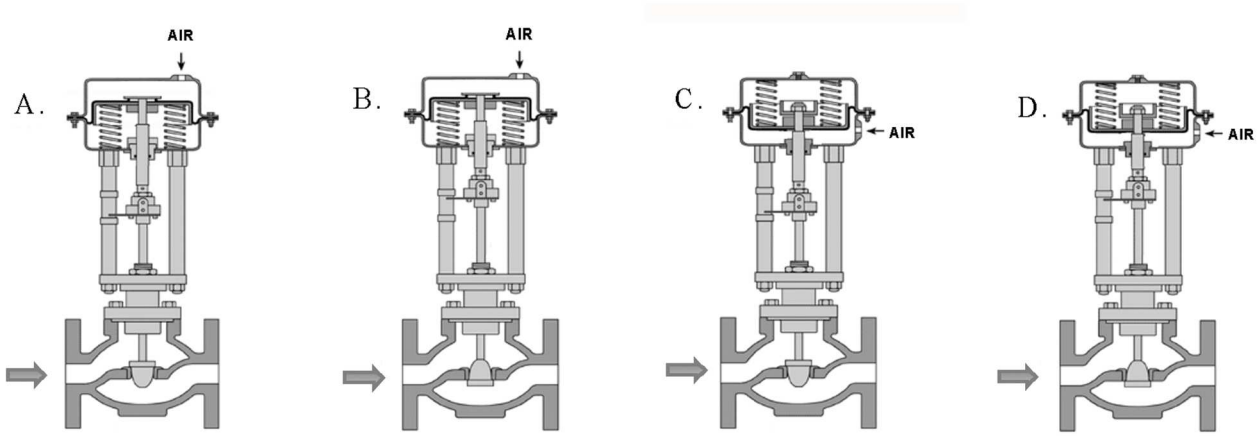

TOPIC: 291003
KNOWLEDGE: K1.04 [3.3/3.3]
QID: B316 (P319)

Which one of the following describes the response of a direct-acting proportional-integral controller, operating in automatic mode, to an increase in the controlled parameter above the controller setpoint?

A. The controller will develop an output signal that continues to increase until the controlled parameter equals the controller setpoint, at which time the output signal stops increasing.

B. The controller will develop an output signal that will remain directly proportional to the difference between the controlled parameter and the controller setpoint.

C. The controller will develop an output signal that continues to increase until the controlled parameter equals the controller setpoint, at which time the output signal becomes zero.

D. The controller will develop an output signal that will remain directly proportional to the rate of change of the controlled parameter.

ANSWER: A.

TOPIC: 291003
KNOWLEDGE: K1.04 [3.3/3.3]
QID: B516 (P617)

Refer to the drawing of a lube oil temperature control system (see figure below).

If the temperature transmitter fails high (high temperature output signal), the temperature controller will position the temperature control valve more _____, causing the actual heat exchanger lube oil outlet temperature to _____.

A. open; decrease

B. open; increase

C. closed; decrease

D. closed; increase

ANSWER: A.

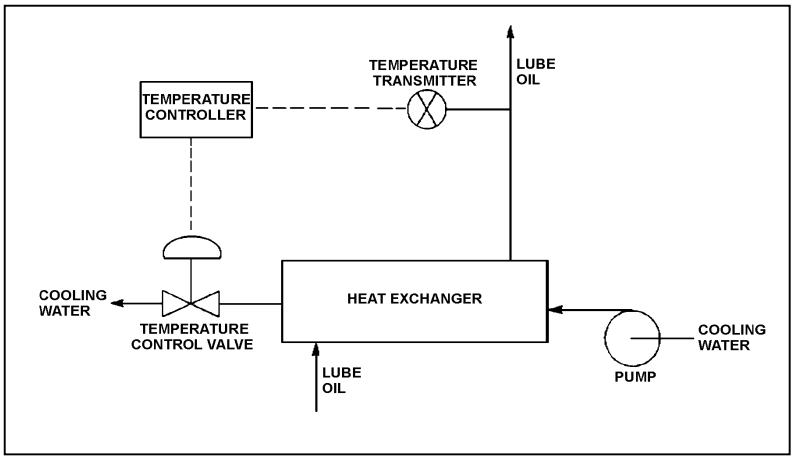

TOPIC: 291003
KNOWLEDGE: K1.04 [3.3/3.3]
QID: B917 (P1315)

Refer to the drawing of a lube oil temperature control system (see figure below).

If the temperature transmitter fails low (low temperature output signal), the temperature controller will position the temperature control valve in the _____ direction, which causes the actual heat exchanger lube oil outlet temperature to _____.

A. close; increase

B. close; decrease

C. open; increase

D. open; decrease

ANSWER: A.

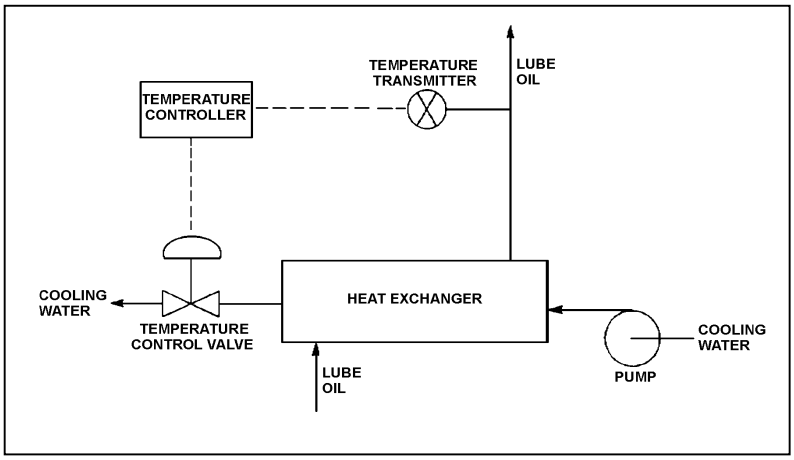

TOPIC: 291003
KNOWLEDGE: K1.04 [3.3/3.3]
QID: B1015 (P917)

A proportional-derivative controller senses an increase in the controlled parameter above the controller setpoint. The derivative function causes the controller output signal to...

A. increase until the controlled parameter equals the controller setpoint, at which time the output signal becomes constant.

B. remain directly proportional to the difference between the controlled parameter and the controller setpoint.

C. increase until the controlled parameter equals the controller setpoint, at which time the output signal becomes zero.

D. change at a rate that is directly proportional to the rate of change of the controlled parameter.

ANSWER: D.

TOPIC: 291003
KNOWLEDGE: K1.04 [3.3/3.3]
QID: B1914 (P1715)

Refer to the drawing of a lube oil temperature control system (see figure below).

Which one of the following describes the type of control used in the lube oil temperature control system?

A. Open loop, because lube oil temperature feedback is being provided to the controller from the lube oil temperature transmitter.

B. Open loop, because lube oil temperature is being controlled by positioning a flow control valve in a separate system.

C. Closed loop, because lube oil temperature feedback is being provided to the controller from the lube oil temperature transmitter.

D. Closed loop, because lube oil temperature is being controlled by positioning a flow control valve in a separate system.

ANSWER: C.

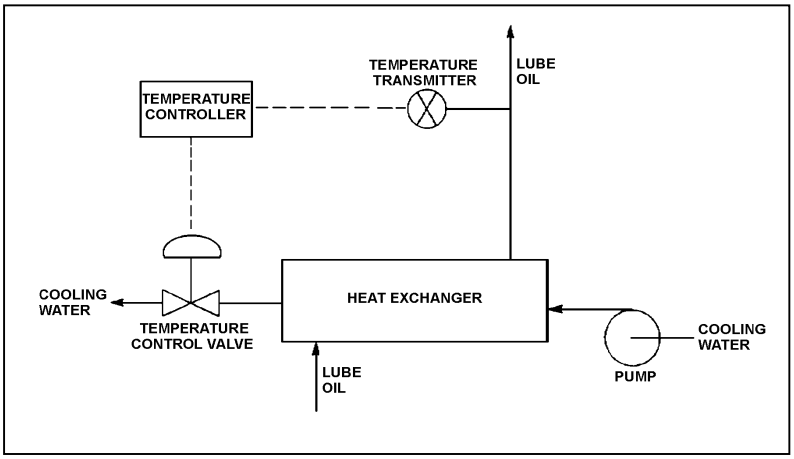

TOPIC: 291003
KNOWLEDGE: K1.04 [3.3/3.3]
QID: B1915 (P1016)

The level in a tank is controlled by an automatic control system. Level is initially at its setpoint. A drain valve is then opened, causing tank level to begin to decrease. The decreasing level causes the controller to begin to open a makeup supply valve. After a few minutes, with the drain valve still open, level is again constant at the setpoint.

The controller in this system uses primarily _____ control.

A. integral

B. on-off

C. derivative

D. proportional

ANSWER: A.

TOPIC: 291003
KNOWLEDGE: K1.04 [3.3/3.3]
QID: B2016 (P2016)

Refer to the drawing of a lube oil temperature control system (see figure below). The temperature control valve is currently 50 percent open.

If the cooling water inlet temperature decreases, the temperature controller will position the temperature control valve more _____, causing cooling water differential temperature through the heat exchanger to _____.

A. closed; increase

B. closed; decrease

C. open; increase

D. open; decrease

ANSWER: A.

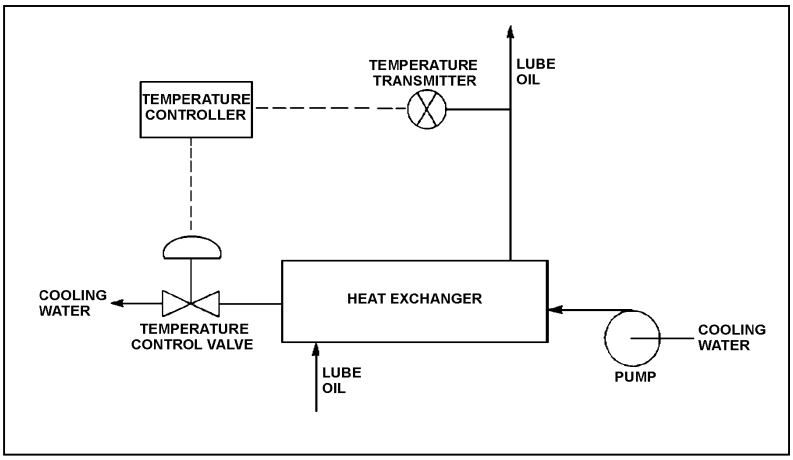

TOPIC: 291003
KNOWLEDGE: K1.04 [3.3/3.3]
QID: B2515 (P2519)

The temperature of the water in a small outside storage tank is controlled by a set of heaters submerged in the tank. The heaters energize at a water temperature of 40°F and deenergize at 48°F. When energized, the heaters produce a constant thermal output.

Which one of the following types of control devices is used in the heater control circuit to produce these characteristics?

A. Bistable

B. Proportional

C. Proportional plus integral

D. Proportional plus derivative

ANSWER: A.

TOPIC: 291003
KNOWLEDGE: K1.04 [3.3/3.3]
QID: B3016 (P3015)

Refer to the drawing of a pressure alarm circuit (see figure below). The orientation of the bistable symbol indicates the characteristics of the bistable, as is normal for a control circuit diagram.

The bistable turns on to actuate an alarm at a system pressure of 100 psig. The bistable has a 5 psig deadband, or neutral zone.

If current system pressure is 90 psig, which one of the following describes the alarm circuit response as system pressure slowly increases to 110 psig?

A. The alarm is currently actuated and will turn off at 95 psig.

B. The alarm will actuate at 100 psig and will <u>not</u> turn off.

C. The alarm is currently actuated and will turn off at 105 psig.

D. The alarm will actuate at 100 psig and will turn off at 105 psig.

ANSWER: C.

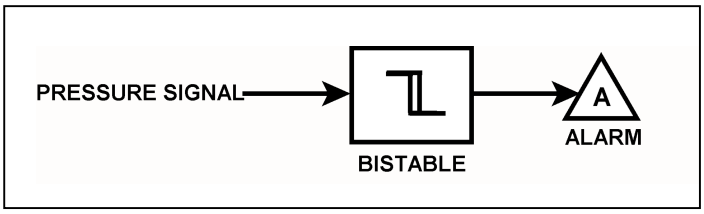

TOPIC: 291003
KNOWLEDGE: K1.04 [3.3/3.3]
QID: B3216 (P3215)

Refer to the drawing of a pressure alarm circuit (see figure below). The orientation of the bistable symbol indicates the characteristics of the bistable, as is normal for a control circuit diagram.

The bistable turns on to actuate an alarm at a system pressure of 100 psig. The bistable has a 5 psig deadband, or neutral zone.

If system pressure is currently 90 psig, which one of the following describes the alarm circuit response as system pressure slowly increases to 110 psig?

A. The alarm is currently actuated and will turn off at 95 psig.

B. The alarm will actuate at 100 psig and will not turn off.

C. The alarm is currently actuated and will turn off at 105 psig.

D. The alarm will actuate at 100 psig and will turn off at 105 psig.

ANSWER: B.

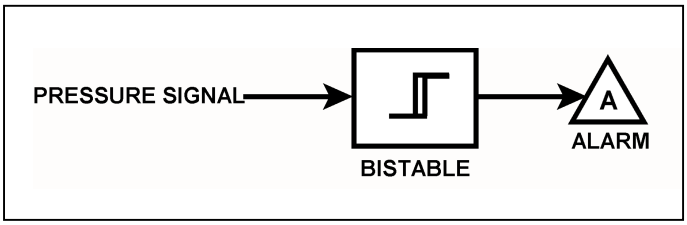

TOPIC: 291003
KNOWLEDGE: K1.04 [3.3/3.3]
QID: B3817 (P3816)

Refer to the drawing of four bistable symbols (see figure below).

A temperature controller uses a bistable that turns on to actuate a warning light when the controlled temperature reaches a low setpoint. The warning light extinguishes immediately after the temperature increases above the low setpoint.

Which one of the following bistable symbols indicates the characteristics of the bistable?

A. 1.

B. 2.

C. 3.

D. 4.

ANSWER: A.

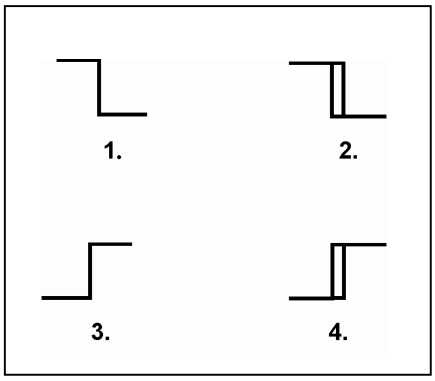

TOPIC: 291003
KNOWLEDGE: K1.04 [3.3/3.3]
QID: B3909 (P3516)

Refer to the drawing of a pressure alarm circuit (see figure below). The orientation of the bistable symbol indicates the characteristics of the bistable, as is normal for a control circuit diagram.

The bistable turns on to actuate an alarm at a system pressure of 100 psig. The bistable has a 5 psig deadband, or neutral zone.

If system pressure is currently 110 psig, which one of the following describes the alarm circuit response as system pressure slowly decreases to 90 psig?

A. The alarm will actuate at 100 psig and will not turn off.

B. The alarm will actuate at 100 psig and will turn off at 95 psig.

C. The alarm is currently actuated and will not turn off.

D. The alarm is currently actuated and will turn off at 95 psig.

ANSWER: A.

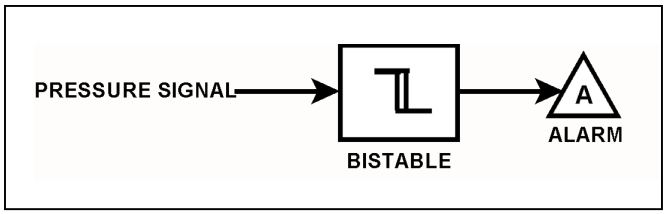

TOPIC: 291003
KNOWLEDGE: K1.04 [3.3/3.3]
QID: B4509 (P4508)

Refer to the drawing of four bistable symbols (see figure below).

A temperature controller uses a bistable that turns on to actuate a warning light when the controlled temperature reaches a high setpoint. The bistable turns off to extinguish the warning light when the temperature decreases to 5°F below the high setpoint.

Which one of the following bistable symbols indicates the characteristics of the bistable?

A. 1.

B. 2.

C. 3.

D. 4.

ANSWER: D.

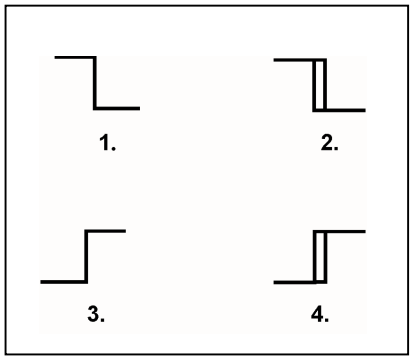

TOPIC: 291003
KNOWLEDGE: K1.04 [3.3/3.3]
QID: B4609 (P4607)

Refer to the drawing of a temperature alarm circuit (see figure below). The orientation of the bistable symbol indicates the characteristics of the bistable, as is normal for a control circuit diagram.

The bistable turns on to actuate an alarm at a temperature of 130°F. The bistable has a 5°F deadband, or neutral zone.

If the current temperature is 150°F, which one of the following describes the alarm circuit response as temperature slowly decreases to 110°F?

A. The alarm is currently actuated and will not turn off.

B. The alarm will actuate at 130°F and will not turn off.

C. The alarm is currently actuated and will turn off at 125°F.

D. The alarm will actuate at 130°F and will turn off at 125°F.

ANSWER: B.

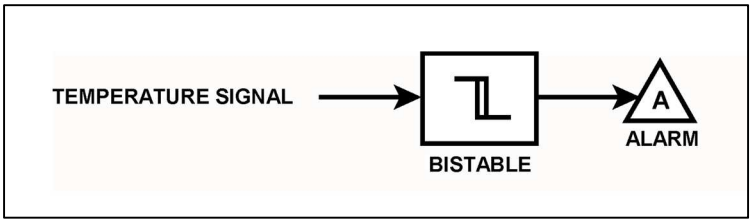

TOPIC: 291003
KNOWLEDGE: K1.04 [3.3/3.3]
QID: B5109 (P5107)

Refer to the drawing of a lube oil temperature control system (see figure below).

The temperature controller is a direct-acting proportional controller with a gain of 1.0. Which one of the following describes the effect of changing the gain to 2.0?

A. Half the temperature deviation from setpoint will produce a given controller output.

B. Twice the temperature deviation from setpoint will produce a given controller output.

C. The temperature control valve will move half as far for a given change in controller output.

D. The temperature control valve will move twice as far for a given change in controller output.

ANSWER: A.

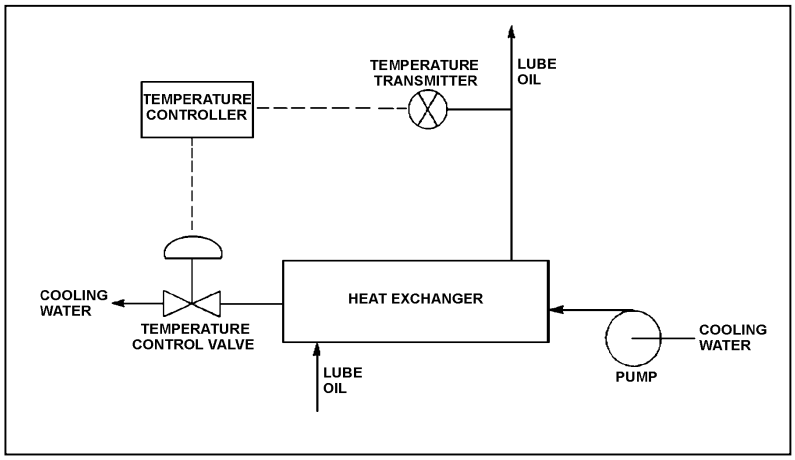

TOPIC: 291003
KNOWLEDGE: K1.04 [3.3/3.3]
QID: B5309 (P5308)

A direct-acting proportional controller is being used to control the temperature of lube oil exiting a heat exchanger. The controller's proportional band is 70°F to 120°F.

Which one of the following will be the controller's output percentage when the measured lube oil temperature is 83°F?

A. 13 percent

B. 26 percent

C. 37 percent

D. 74 percent

ANSWER: B.

TOPIC: 291003
KNOWLEDGE: K1.04 [3.3/3.3]
QID: B5509 (P5508)

A reverse-acting proportional controller is being used to control the temperature of lube oil exiting a heat exchanger. The controller's proportional band is 70°F to 120°F.

Which one of the following will be the controller's output percentage when the measured lube oil temperature is 83°F?

A. 13 percent

B. 26 percent

C. 74 percent

D. 87 percent

ANSWER: C.

TOPIC: 291003
KNOWLEDGE: K1.04 [3.3/3.3]
QID: B5609 (P5608)

The temperature of the water in a storage tank is monitored by a bistable alarm circuit. If water temperature decreases to 50°F, a bistable turns on to actuate an alarm indicator. As soon as the water temperature exceeds 50°F, the bistable turns off to clear the alarm.

Which one of the following bistable symbols indicates the characteristics of the bistable used in the alarm circuit?

A. 1.

B. 2.

C. 3.

D. 4.

ANSWER: A.

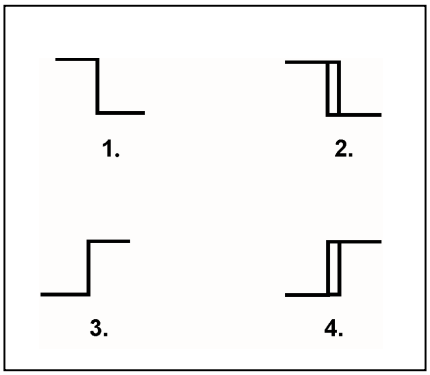

TOPIC: 291003
KNOWLEDGE: K1.04 [3.3/3.3]
QID: B5709 (P5708)

Refer to the drawing of a lube oil temperature control system (see figure below).

The temperature controller is a direct-acting proportional controller with a gain of 1.0. Which one of the following describes the effect of changing the gain to 2.0?

A. Increases the range of lube oil temperatures that produces a proportional controller response.

B. Increases the change in valve position resulting from a given change in lube oil temperature.

C. Increases the difference between the controller setpoint and the lube oil temperature at steady-state conditions.

D. Increases the lube oil temperature deviation from setpoint required to produce a given controller output.

ANSWER: B.

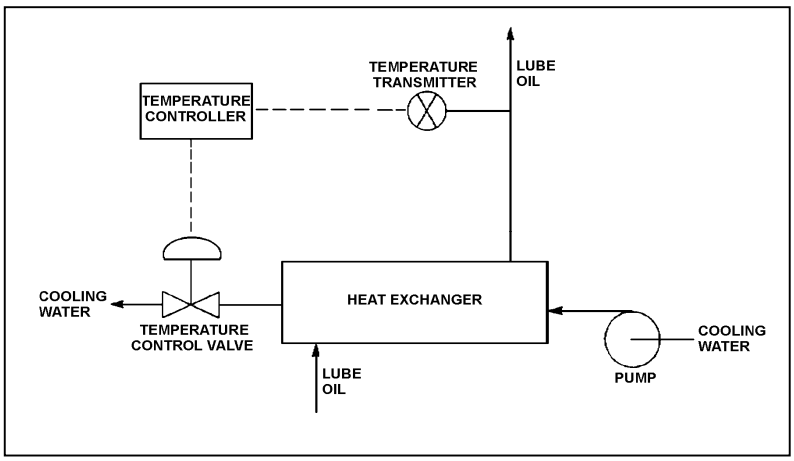

TOPIC: 291003
KNOWLEDGE: K1.04 [3.3/3.3]
QID: B5908 (P5908)

Refer to the drawing of a lube oil temperature control system (see figure below).

The temperature controller is a direct-acting proportional controller. Which one of the following describes the effect of changing the controller's gain from 1.0 to 2.0?

A. Half the change in measured temperature will produce the same change in controller input.

B. Twice the change in measured temperature will produce the same change in controller input.

C. The temperature control valve will move half as far for the same change in controller input.

D. The temperature control valve will move twice as far for the same change in controller input.

ANSWER: D.

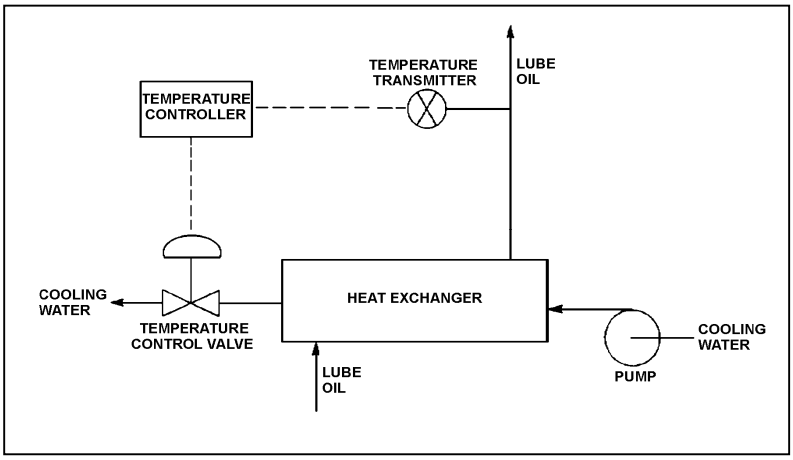

TOPIC: 291003
KNOWLEDGE: K1.04 [3.3/3.3]
QID: B6208 (P6209)

An outside water storage tank is equipped with submerged heaters. The heaters energize at minimum power when water temperature decreases to 48°F. If water temperature continues to decrease, heater power will increase directly with the temperature deviation from 48°F until maximum power is reached at 40°F. If water temperature decreases faster than 1°F/min, the heaters will reach maximum power at a higher water temperature.

Which one of the following types of control is used in the heater control circuit to produce these characteristics?

A. Proportional only

B. Proportional plus integral

C. Proportional plus derivative

D. Proportional plus integral plus derivative

ANSWER: C.

TOPIC: 291003
KNOWLEDGE: K1.04 [3.3/3.3]
QID: B6409 (P6408)

Refer to the drawing of a lube oil temperature control system (see figure below).

The temperature controller is a direct-acting proportional-integral controller with a gain of 1.0. A step increase in lube oil temperature results in an initial controller demand for the temperature control valve (TCV) to open an additional 10 percent. After the lube oil temperature stabilizes, the final TCV position is 60 percent open.

If the controller's gain was 2.0 rather than 1.0, the initial controller demand for the above temperature transient would be for the TCV to open an additional _____ percent; and the final TCV position would be _____ percent open.

A. 5; 60

B. 5; less than 60

C. 20; 60

D. 20; more than 60

ANSWER: C.

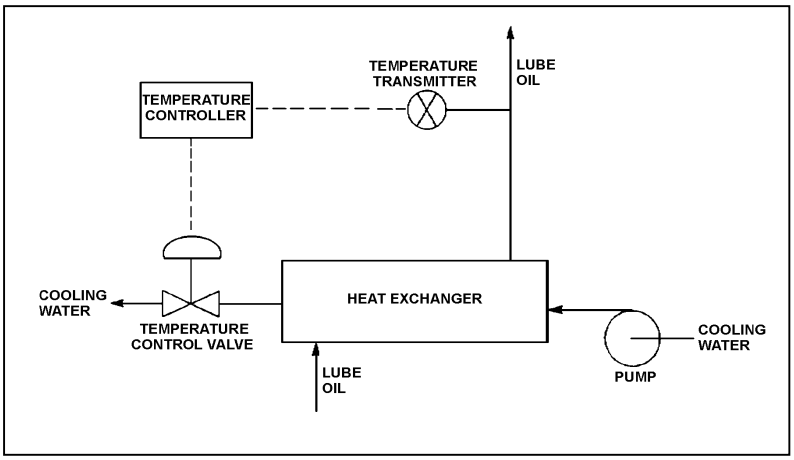

TOPIC: 291003
KNOWLEDGE: K1.04 [3.3/3.3]
QID: B6609 (P6607)

Refer to the drawing of a lube oil temperature control system (see figure below).

The temperature controller is a direct-acting proportional-integral controller with a gain of 1.0. All system temperatures are initially stable.

An increase in lube oil temperature causes the controller to open the temperature control valve (TCV) farther. What would be the effect on the TCV response if the controller gain was 2.0 rather than 1.0?

A. The final TCV position would be half as far from its initial position.

B. The final TCV position would be twice as far from its initial position.

C. The final TCV position would be the same, but the TCV initially would travel a greater distance in response to the lube oil temperature change.

D. The final TCV position would be the same, but the TCV initially would travel a shorter distance in response to the lube oil temperature change.

ANSWER: C.

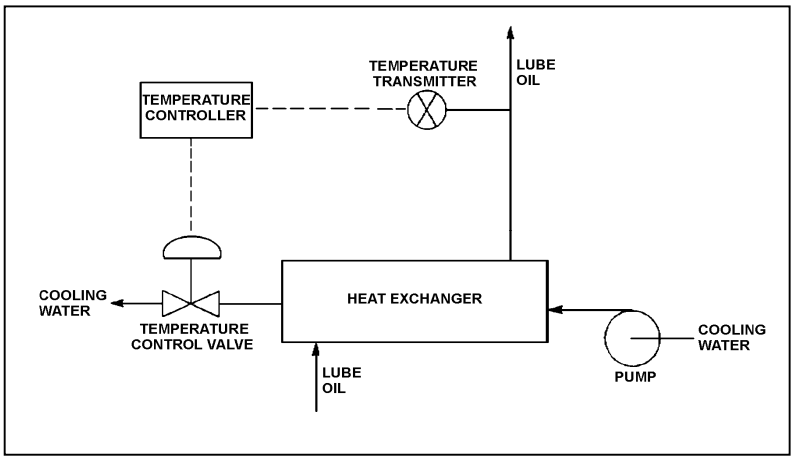

TOPIC: 291003
KNOWLEDGE: K1.04 [3.3/3.3]
QID: B6709 (P6707)

Refer to the drawing of four bistable symbols (see figure below).

A temperature controller uses a bistable that turns on to actuate a warning light when the controlled temperature reaches a low setpoint. The bistable turns off to extinguish the warning light when the temperature increases to 5°F above the low setpoint.

Which one of the following bistable symbols indicates the characteristics of the bistable?

A. 1.

B. 2.

C. 3.

D. 4.

ANSWER: B.

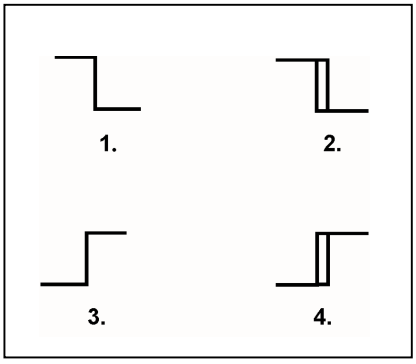

TOPIC: 291003
KNOWLEDGE: K1.04 [3.3/3.3]
QID: B6909 (P6908)

A direct-acting proportional controller is being used to control the temperature of lube oil exiting a heat exchanger. The controller's proportional band is 80°F to 130°F.

Which one of the following will be the controller's output percentage when the measured lube oil temperature is 92°F?

A. 12 percent

B. 24 percent

C. 38 percent

D. 76 percent

ANSWER: B.

TOPIC: 291003
KNOWLEDGE: K1.04 [3.3/3.3]
QID: B7408 (P7408)

Refer to the logic diagram for a valve controller (see figure below).

Which one of the following combinations of inputs will result in the valve receiving an OPEN signal?

	INPUTS			
	1	2	3	4
A.	Off	On	Off	Off
B.	Off	On	On	Off
C.	On	Off	Off	On
D.	On	Off	On	On

ANSWER: B.

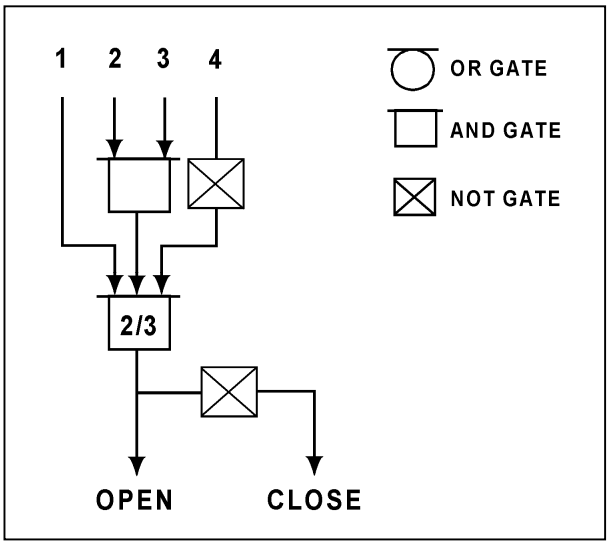

TOPIC: 291003
KNOWLEDGE: K1.04 [3.3/3.3]
QID: B7623 (P7622)

Refer to the drawing of a temperature alarm circuit (see figure below). The orientation of the bistable symbol indicates the characteristics of the bistable, as is normal for a control circuit diagram.

The bistable turns on to actuate an alarm at a temperature of 130°F. The bistable has a 5°F deadband, or neutral zone.

If the current temperature is 150°F, which one of the following describes the alarm circuit response as temperature slowly decreases to 110°F?

A. The alarm is currently actuated and will not turn off.

B. The alarm will actuate at 130°F and will not turn off.

C. The alarm is currently actuated and will turn off at 125°F.

D. The alarm will actuate at 130°F and will turn off at 125°F.

ANSWER: C.

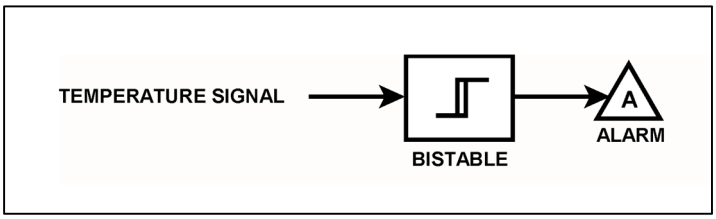

TOPIC: 291003
KNOWLEDGE: K1.04 [3.3/3.3]
QID: B7693 (P7692)

Refer to the drawing of a pressure alarm circuit (see figure below). The orientation of the bistable symbol indicates the characteristics of the bistable, as is normal for a control circuit diagram.

The bistable turns on to actuate an alarm at a system pressure of 100 psig. The bistable has a 5 psig deadband, or neutral zone.

If system pressure increases to 105 psig, and subsequently decreases to _____; the status of the alarm will be _____.

A. 100 psig; off

B. 98 psig; off

C. 94 psig; on

D. 92 psig; off

ANSWER: D.

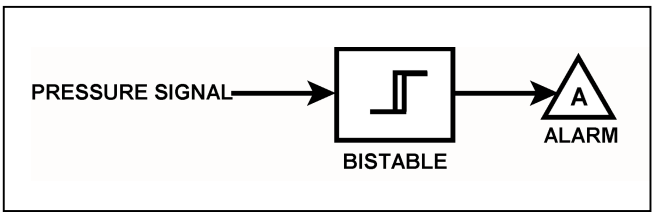

TOPIC: 291003
KNOWLEDGE: K1.04 [3.3/3.3]
QID: B7702 (P7703)

An outside water storage tank is equipped with submerged heaters. The heaters energize at minimum power when water temperature decreases to 48°F. If water temperature continues to decrease, heater power will increase directly with the temperature deviation from 48°F until maximum power is reached at 40°F. On cold days, the tank water temperature is usually maintained at about 44°F with the heaters energized at half power.

Which one of the following types of control is used in the heater control circuit to produce these characteristics?

A. Proportional only

B. Proportional plus integral only

C. Proportional plus derivative only

D. Proportional plus integral plus derivative

ANSWER: A.

TOPIC: 291003
KNOWLEDGE: K1.04 [3.3/3.3]
QID: B7703 (P7702)

Refer to the drawing of a pressure alarm circuit (see figure below). The orientation of the bistable symbol indicates the characteristics of the bistable, as is normal for a control circuit diagram.

The bistable will turn on at a system pressure of 100 psig. The bistable has a 5 psig deadband, or neutral zone.

If system pressure is currently 98 psig, which one of the following describes the status of the alarm?

A. The alarm is <u>not</u> actuated.

B. The alarm is actuated and will turn off at 95 psig.

C. The alarm is actuated and will turn off at 105 psig.

D. Additional information is needed to determine the status of the alarm.

ANSWER: D.

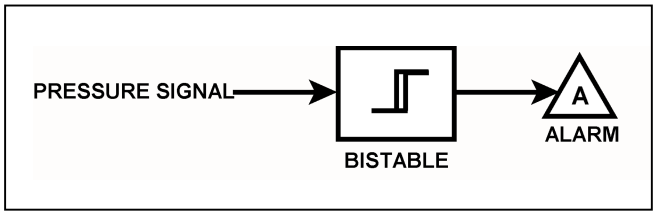

TOPIC: 291003
KNOWLEDGE: K1.05 [2.8/2.8]
QID: B217

The output pressure of a pneumatic controller is typically insufficient to drive a valve actuator accurately. To overcome this problem, a pneumatic control system will normally employ a/an...

A. valve actuating lead/lag unit.

B. air pressure regulator.

C. valve positioner.

D. air accumulator.

ANSWER: C.

TOPIC: 291003
KNOWLEDGE: K1.05 [2.8/2.8]
QID: B317 (P318)

Refer to the drawing of a pneumatic control system (see figure below).

The purpose of the valve positioner is to convert...

A. a small control air pressure into a proportionally larger air pressure to adjust valve position.

B. a large control air pressure into a proportionally smaller air pressure to adjust valve position.

C. pneumatic force into mechanical force to adjust valve position.

D. mechanical force into pneumatic force to adjust valve position.

ANSWER: A.

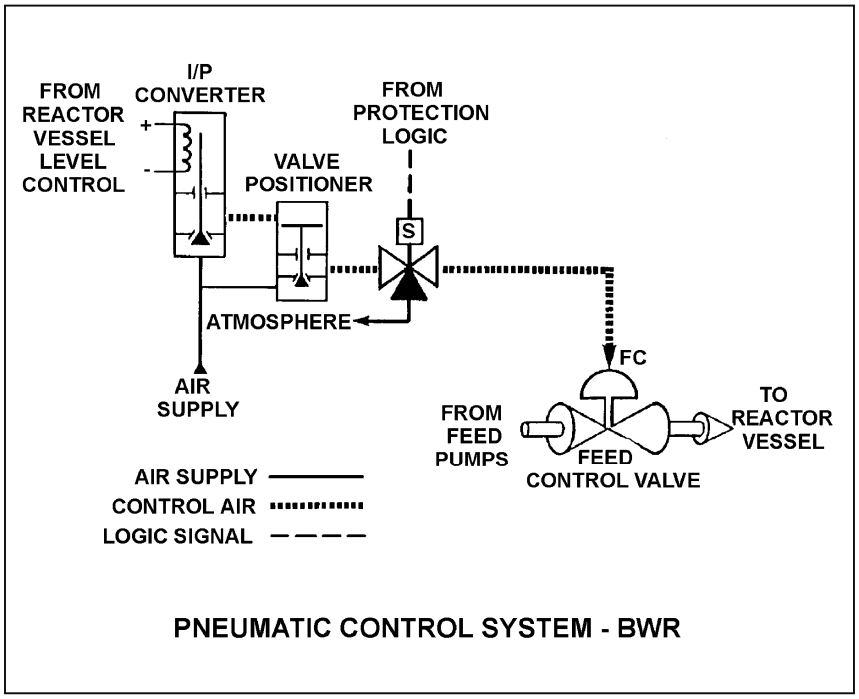

TOPIC: 291003
KNOWLEDGE: K1.05 [2.8/2.8]
QID: B816

The output pressure of a pneumatic controller is typically insufficient to drive a valve actuator accurately. To overcome this problem, a pneumatic control system will normally employ a...

A. diaphragm operator.

B. pneumatic clutch.

C. torque converter.

D. valve positioner.

ANSWER: D.

TOPIC: 291003
KNOWLEDGE: K1.05 [2.8/2.8]
QID: B1116 (P1117)

An air-operated isolation valve requires 4,800 pounds-force from its diaphragm actuator and 4 inches of stem travel for proper operation. The valve positioner can supply up to 80 psig of air pressure to the actuator.

What is the minimum surface area of the actuator diaphragm required for proper valve operation?

A. 15 square inches

B. 60 square inches

C. 120 square inches

D. 240 square inches

ANSWER: B.

TOPIC: 291003
KNOWLEDGE: K1.05 [2.8/2.8]
QID: B1416 (P1217)

What is the purpose of a valve positioner in a typical pneumatic valve control system?

A. Convert the valve controller pneumatic output signal into a mechanical force to position the valve.

B. Convert the valve controller pneumatic output signal into an electrical output to position the valve.

C. Compare valve controller pneumatic output signal to setpoint error, and adjust valve actuator air supply pressure to position the valve.

D. Compare valve controller pneumatic output signal to valve position, and adjust valve actuator air supply pressure to position the valve.

ANSWER: D.

TOPIC: 291003
KNOWLEDGE: K1.05 [2.8/2.8]
QID: B1517 (P1516)

An air-operated isolation valve requires 3,200 pounds-force from its diaphragm actuator and 4 inches of stem travel for proper operation. The area of the actuator diaphragm is 80 square inches.

What is the approximate air pressure required for proper valve operation?

A. 10 psig

B. 25 psig

C. 40 psig

D. 55 psig

ANSWER: C.

TOPIC: 291003
KNOWLEDGE: K1.05 [2.8/2.8]
QID: B1617 (P1618)

An air-operated isolation valve requires 3,600 pounds-force from its diaphragm actuator and 4 inches of stem travel for proper operation. The valve positioner can supply up to 120 psig of air pressure to the actuator.

What is the minimum surface area of the actuator diaphragm required for proper valve operation?

A. 30 square inches

B. 60 square inches

C. 90 square inches

D. 120 square inches

ANSWER: A.

TOPIC: 291003
KNOWLEDGE: K1.05 [2.8/2.8]
QID: B2117 (P2116)

An air-operated isolation valve requires 3,200 pounds-force from its diaphragm actuator and 4 inches of stem travel for proper operation. The area of the actuator diaphragm is 160 square inches.

What is the approximate air pressure required for proper valve operation?

A. 20 psig

B. 40 psig

C. 60 psig

D. 80 psig

ANSWER: A.

TOPIC: 291003
KNOWLEDGE: K1.05 [2.8/2.8]
QID: B2216 (P2617)

Which one of the following describes a characteristic of pneumatic valve positioners?

A. They can provide automatic and manual demand signals to pneumatic controllers and valve actuators.

B. They can increase or decrease air pressure to valve actuators to obtain the proper valve response.

C. They can either supply or receive air to/from pneumatic controllers, depending on the direction of valve travel.

D. They can increase air pressure to valve actuators above existing main air header pressure.

ANSWER: B.

TOPIC: 291003
KNOWLEDGE: K1.05 [2.8/2.8]
QID: B2416 (P2417)

An air-operated isolation valve requires 3,600 pounds-force applied to the top of the actuator diaphragm to open. The actuator diaphragm has a diameter of 9 inches and the valve stem travels 3 inches from fully open to fully closed.

If control air pressure to the valve actuator begins to increase from 0 psig, which one of the following is the approximate air pressure at which the valve will begin to open?

A. 14 psig

B. 57 psig

C. 81 psig

D. 127 psig

ANSWER: B.

TOPIC: 291003
KNOWLEDGE: K1.05 [2.8/2.8]
QID: B2516 (P2517)

An air-operated isolation valve requires 2,400 pounds-force applied to the top of the actuator diaphragm to open. The actuator diaphragm has a diameter of 12 inches.

If control air pressure to the valve actuator begins to increase from 0 psig, which one of the following is the approximate air pressure at which the valve will begin to open?

A. 21 psig

B. 34 psig

C. 43 psig

D. 64 psig

ANSWER: A.

TOPIC: 291003
KNOWLEDGE: K1.05 [2.8/2.8]
QID: B2716 (P2716)

An air-operated isolation valve requires 3,600 pounds-force applied to the top of the actuator diaphragm to open. The actuator diaphragm has a diameter of 8 inches.

If control air pressure to the valve actuator begins to increase from 0 psig, which one of the following is the approximate air pressure at which the valve will begin to open?

A. 32 psig

B. 45 psig

C. 56 psig

D. 72 psig

ANSWER: D.

TOPIC: 291003
KNOWLEDGE: K1.05 [2.8/2.8]
QID: B2816 (P1116)

Which one of the following describes a characteristic of pneumatic valve positioners?

A. They provide auto and manual demand signals to valve controllers and valve actuators.

B. They supply air pressure to valve actuators in response to a control signal to regulate valve position.

C. They can either receive or supply air to/from valve controllers, depending on the direction of valve travel.

D. They act independently of the valve controller, in order to prevent pressure transients on the valve actuator diaphragm.

ANSWER: B.

TOPIC: 291003
KNOWLEDGE: K1.05 [2.8/2.8]
QID: B2915 (P2917)

An air-operated isolation valve requires 2,400 pounds-force applied to the top of the actuator diaphragm to open against spring pressure. The actuator diaphragm has a diameter of 12 inches.

If control air pressure to the valve actuator begins to decrease from 100 psig, which one of the following is the approximate air pressure at which the valve will begin to close?

A. 5 psig

B. 17 psig

C. 21 psig

D. 66 psig

ANSWER: C.

TOPIC: 291003
KNOWLEDGE: K1.05 [2.8/2.8]
QID: B2917 (P2416)

Which one of the following describes the operation of a typical pneumatic valve positioner?

A. Compares the valve controller demand signal with actual valve position and sends an error signal to the valve controller for adjustment of the demand signal.

B. Compares the valve controller automatic and manual setpoints and sends an error signal to the valve controller to ensure the manual demand signal is tracking the automatic demand signal.

C. Receives a valve position error signal from the valve controller and positions the valve as necessary to null the valve position error signal.

D. Receives a demand signal from the valve controller and supplies the appropriate air pressure to the valve actuator to move the valve to the demanded position.

ANSWER: D.

TOPIC: 291003
KNOWLEDGE: K1.05 [2.8/2.8]
QID: B3317 (P2216)

An air-operated isolation valve requires 2,800 pounds-force (lbf) from its diaphragm actuator and 4 inches of stem travel for proper operation. The valve positioner can supply up to 117 psig of air pressure to the actuator.

What is the minimum surface area of the actuator diaphragm required for proper valve operation?

A. 24 square inches

B. 48 square inches

C. 94 square inches

D. 138 square inches

ANSWER: A.

TOPIC: 291003
KNOWLEDGE: K1.06 [2.5/2.6]
QID: B417 (P417)

If the turbine shaft speed signal received by a typical turbine governor control system fails low during turbine startup, the turbine governor will cause turbine speed to...

A. increase until the mismatch with demanded turbine speed is nulled.

B. increase until an upper limit is reached or the turbine trips on overspeed.

C. decrease until the mismatch with demanded turbine speed is nulled.

D. decrease to a minimum speed setpoint.

ANSWER: B.

TOPIC: 291003
KNOWLEDGE: K1.06 [2.5/2.6]
QID: B1016 (P1815)

If the turbine shaft speed signal received by a typical turbine governor control system fails <u>high</u> during turbine startup, the turbine governor will cause turbine speed to...

A. increase until an upper limit is reached or the turbine trips on overspeed.

B. increase until the mismatch with the turbine speed demand signal is nulled.

C. decrease until a lower limit is reached or turbine steam flow is isolated.

D. decrease until the mismatch with the turbine speed demand signal is nulled.

ANSWER: C.

TOPIC: 291003
KNOWLEDGE: K1.06 [2.5/2.6]
QID: B1316 (P419)

Refer to the drawing of a flyball-weight mechanical speed governor (see figure below).

In a flyball-weight mechanical speed governor, the purpose of the spring on the flyball mechanism is to _____ centrifugal force by driving the flyballs _____.

A. counteract; outward

B. aid; inward

C. counteract; inward

D. aid; outward

ANSWER: C.

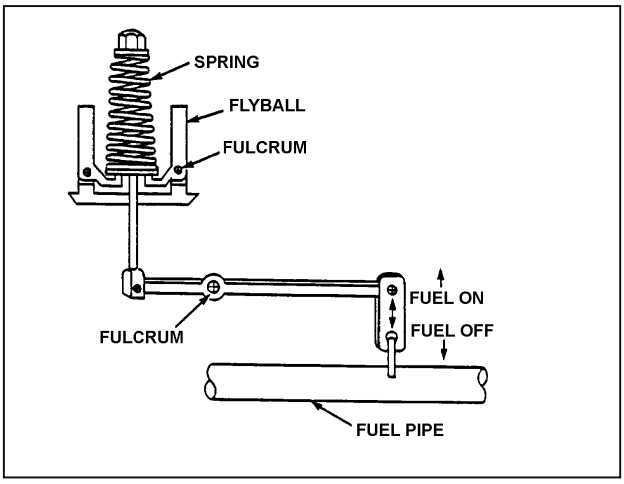

TOPIC: 291003
KNOWLEDGE: K1.06 [2.5/2.6]
QID: B1815 (P1818)

A diesel generator is supplying an isolated electrical bus with the governor operating in the isochronous mode. If a large electrical load is started on the bus, generator frequency will...

A. initially decrease, then increase and stabilize below the initial value.

B. initially decrease, then increase and stabilize at the initial value.

C. initially decrease, then increase and stabilize above the initial value.

D. remain constant during and after the load start.

ANSWER: B.

TOPIC: 291003
KNOWLEDGE: K1.06 [2.5/2.6]
QID: B2015 (P2018)

A diesel generator is supplying an isolated electrical bus with the governor operating in the isochronous mode. If a large electrical bus load trips, generator frequency will...

A. initially increase, then decrease and stabilize below the initial value.

B. initially increase, then decrease and stabilize at the initial value.

C. initially increase, then decrease and stabilize above the initial value.

D. remain constant during and after the load trip.

ANSWER: B.

TOPIC: 291003
KNOWLEDGE: K1.06 [2.5/2.6]
QID: B2817 (P2818)

A diesel generator (DG) is supplying an isolated electrical bus with the DG governor operating in the speed droop mode. Assuming the DG does not trip, if a large electrical bus load trips, bus frequency will initially...

A. increase, then decrease and stabilize below the initial value.

B. increase, then decrease and stabilize above the initial value.

C. decrease, then increase and stabilize below the initial value.

D. decrease, then increase and stabilize above the initial value.

ANSWER: B.

TOPIC: 291004
KNOWLEDGE: K1.01 [3.2/3.2]
QID: B218 (P221)

A centrifugal pump is initially operating at maximum rated flow rate in an open system. Which one of the following moderate changes will cause the pump to operate in closer proximity to cavitation?

A. Increase pump inlet temperature.

B. Decrease pump speed.

C. Increase pump suction pressure.

D. Decrease pump recirculation flow rate.

ANSWER: A.

TOPIC: 291004
KNOWLEDGE: K1.01 [3.2/3.2]
QID: B320

Which one of the following changes in nuclear power plant status will bring the reactor recirculation system closer to the condition in which the recirculation pump will cavitate?

A. During a plant shutdown, recirculation pump suction temperature decreases while reactor pressure remains constant.

B. Recirculation pump speed increases.

C. Reactor water level increases.

D. During reactor power operations, extraction steam to one of the high pressure feedwater heaters isolates.

ANSWER: B.

TOPIC: 291004
KNOWLEDGE: K1.01 [3.2/3.2]
QID: B1018 (P1520)

If a centrifugal pump is started with the discharge valve fully open versus throttled, the possibility of pump runout will _____; and the possibility of pump cavitation will _____.

A. increase; decrease

B. increase; increase

C. decrease; decrease

D. decrease; increase

ANSWER: B.

TOPIC: 291004
KNOWLEDGE: K1.01 [3.2/3.2]
QID: B1218 (P1220)

Which one of the following describes pump cavitation?

A. Vapor bubbles are formed when the enthalpy difference between pump discharge and pump suction exceeds the latent heat of vaporization.

B. Vapor bubbles are formed in the eye of the pump impeller and collapse as they enter higher pressure regions of the pump.

C. Vapor bubbles are produced when the localized pressure exceeds the vapor pressure at the existing temperature.

D. Vapor bubbles are discharged from the pump where they collapse on downstream piping and cause localized water hammers.

ANSWER: B.

TOPIC: 291004
KNOWLEDGE: K1.01 [3.2/3.2]
QID: B1718 (P1820)

If a centrifugal pump is started with the discharge valve throttled versus fully open, the possibility of pump runout will _____; and the possibility of pump cavitation will _____.

A. increase; decrease

B. increase; increase

C. decrease; decrease

D. decrease; increase

ANSWER: C.

TOPIC: 291004
KNOWLEDGE: K1.01 [3.2/3.2]
QID: B2118 (P1021)

Which one of the following will result in immediate cavitation of a centrifugal pump that is initially operating at normal rated flow?

A. Recirculation flow path is aligned.

B. Recirculation flow path is isolated.

C. Pump suction valve is fully closed.

D. Pump discharge valve is fully closed.

ANSWER: C.

TOPIC: 291004
KNOWLEDGE: K1.02 [2.8/2.8]
QID: B18

Venting a centrifugal pump prior to operating it ensures that...

A. pump runout will <u>not</u> occur.

B. pump internal corrosion is reduced.

C. gas binding is reduced.

D. starting load is minimized.

ANSWER: C.

TOPIC: 291004
KNOWLEDGE: K1.02 [2.8/2.8]
QID: B219

Gas binding in a centrifugal pump can be prevented by _____ prior to pump start.

A. venting the pump

B. lowering suction pressure

C. throttling the discharge valve

D. shutting the discharge valve

ANSWER: A.

TOPIC: 291004
KNOWLEDGE: K1.02 [2.8/2.8]
QID: B1821 (P1927)

Which one of the following is an effective method for ensuring that a centrifugal pump remains primed and does not become gas bound during pump operation and after pump shutdown?

A. Install the pump below the level of the suction supply.

B. Install a check valve in the discharge piping of the pump.

C. Install an orifice plate in the discharge piping of the pump.

D. Install a pump recirculation line from the pump discharge piping to the pump suction piping.

ANSWER: A.

TOPIC: 291004
KNOWLEDGE: K1.03 [2.8/2.9]
QID: B518

Which one of the following describes gas binding of a centrifugal pump?

A. Pump capacity is reduced, due to the presence of steam or air in the pump impeller.

B. Pump capacity is reduced, due to windage losses between the pump impeller and pump casing.

C. Pump motor current increases, due to the compression of gases in the pump volute.

D. Pump motor current increases, due to the high head requirements for pumping a fluid saturated with dissolved gases.

ANSWER: A.

TOPIC: 291004
KNOWLEDGE: K1.04 [3.0/3.1]
QID: B19

Which one of the following would result from operating a motor-driven centrifugal pump for extended periods with the discharge valve shut and no recirculation flow?

A. No damage, because the pump and motor are designed to operate with the discharge valve shut.

B. Pump overheating, cavitation, and ultimately pump failure.

C. Excessive motor current, damage to motor windings, and ultimately motor failure.

D. Pump and motor overspeed, and tripping on high motor current.

ANSWER: B.

TOPIC: 291004
KNOWLEDGE: K1.04 [3.0/3.1]
QID: B319 (P321)

A motor-driven centrifugal pump with no recirculation flow path must be stopped when discharge pressure reaches the pump shutoff head to prevent...

A. overheating of the pump.

B. overheating of the motor.

C. bursting of the pump casing.

D. water hammer in downstream lines.

ANSWER: A.

TOPIC: 291004
KNOWLEDGE: K1.04 [3.0/3.1]
QID: B423 (P23)

Operating a motor-driven centrifugal pump for an extended period of time under no flow conditions will cause...

A. pump failure from overspeed.

B. pump failure from overheating.

C. motor failure from overspeed.

D. motor failure from overheating.

ANSWER: B.

TOPIC: 291004
KNOWLEDGE: K1.04 [3.0/3.1]
QID: B1219 (P2221)

Refer to the drawing of a pump with a recirculation line (see figure below).

Valve A will open when pump...

A. discharge pressure increases above a setpoint.

B. discharge pressure decreases below a setpoint.

C. flow rate increases above a setpoint.

D. flow rate decreases below a setpoint.

ANSWER: D.

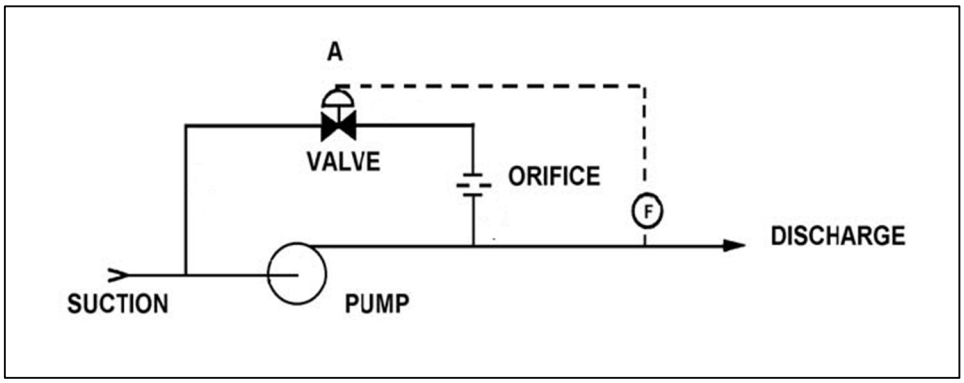

TOPIC: 291004
KNOWLEDGE: K1.04 [3.0/3.1]
QID: B1319 (P119)

Refer to the drawing of centrifugal pump and system operating curves (see figure below).

Which point represents pump operation at shutoff head?

A. Point A

B. Point B

C. Point C

D. Point D

ANSWER: A.

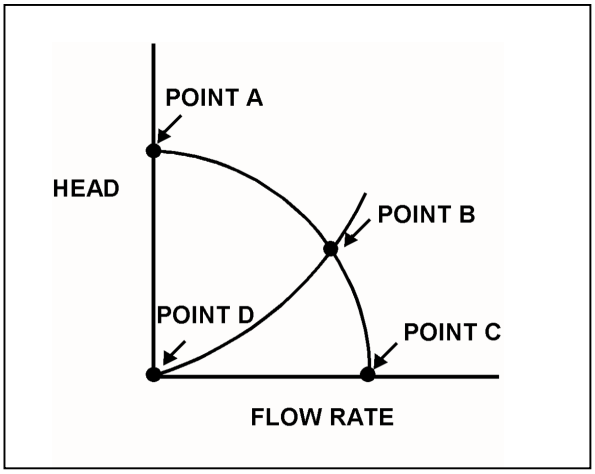

TOPIC: 291004
KNOWLEDGE: K1.04 [3.0/3.1]
QID: B1917 (P1320)

Refer to the drawing of a centrifugal pump with a recirculation line (see figure below).

The flowpath through valve A is designed to...

A. prevent pump runout by creating a recirculation flowpath.

B. provide a small flow rate through the pump during shutoff head conditions.

C. direct a small amount of water to the pump suction to raise available net positive suction head.

D. prevent the discharge piping from exceeding design pressure during no-flow conditions.

ANSWER: B.

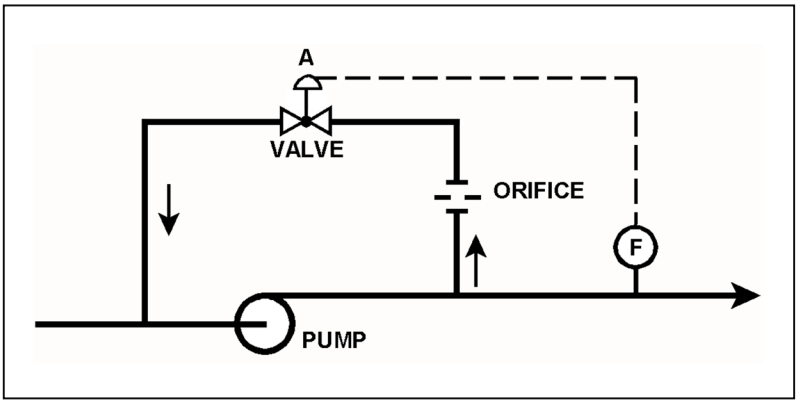

TOPIC: 291004
KNOWLEDGE: K1.04 [3.0/3.1]
QID: B2017 (P2019)

Refer to the drawing of a pump with recirculation line (see figure below).

Which one of the following describes the response of the pump if a complete flow blockage occurs in the discharge line just downstream of the flow transmitter?

A. The pump will overheat after a relatively short period of time, due to a loss of both main flow and recirculation flow.

B. The pump will overheat after a relatively long period of time, due to a loss of main flow only.

C. The pump will overheat after a relatively long period of time, due to a loss of recirculation flow only.

D. The pump will be able to operate under these conditions indefinitely, due to sustained main flow.

ANSWER: B.

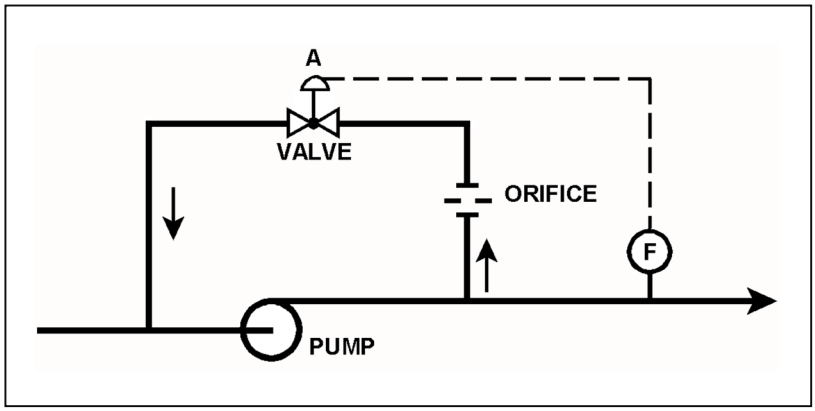

TOPIC: 291004
KNOWLEDGE: K1.04 [3.0/3.1]
QID: B2225 (P3122)

Refer to the drawing of a pump with a recirculation line (see figure below).

Valve A will close when pump...

A. discharge pressure increases above a setpoint.

B. discharge pressure decreases below a setpoint.

C. flow rate increases above a setpoint.

D. flow rate decreases below a setpoint.

ANSWER: C.

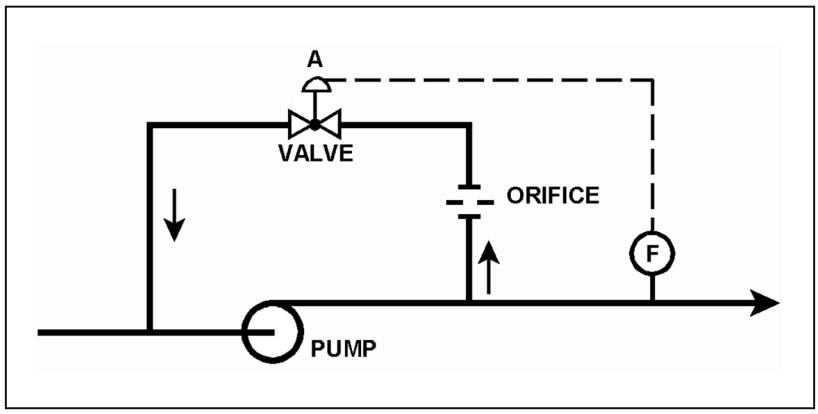

TOPIC: 291004
KNOWLEDGE: K1.05 [2.8/2.9]
QID: B20

A centrifugal pump is operating at rated speed with a pump head of 240 psid. The speed of the pump is then decreased until the power consumption is 1/64 of its original value. What is the approximate new pump head?

A. 3.75 psid

B. 15 psid

C. 30 psid

D. 60 psid

ANSWER: B.

TOPIC: 291004
KNOWLEDGE: K1.05 [2.8/2.9]
QID: B102

The discharge head of a centrifugal pump will decrease if the...

A. pump suction pressure is increased.

B. speed of the pump increases.

C. discharge valve is throttled closed.

D. temperature of the fluid being pumped increases.

ANSWER: D.

TOPIC: 291004
KNOWLEDGE: K1.05 [2.8/2.9]
QID: B106

A multi-speed centrifugal pump is operating at 1800 rpm, providing a flow of 400 gpm with a pump head of 20 psid. If the pump speed is increased to 3600 rpm, the new pump head will be...

A. 160 psid

B. 80 psid

C. 60 psid

D. 40 psid

ANSWER: B.

TOPIC: 291004
KNOWLEDGE: K1.05 [2.8/2.9]
QID: B112

A variable-speed centrifugal pump is running with its drive motor at 1,800 rpm. The initial flow rate is 1,000 gpm, total head is 100 feet, and work input is 500 hp.

If the flow rate is changed to 1,200 gpm, which one of the following will be the correct value for new work input?

A. 550 hp

B. 778 hp

C. 864 hp

D. 912 hp

ANSWER: C.

TOPIC: 291004
KNOWLEDGE: K1.05 [2.8/2.9]
QID: B1020 (P3323)

Refer to the drawing of a cooling water system and the associated pump/system operating curves (see figure below). Pumps A and B are identical single-speed centrifugal pumps and initially only pump A is operating.

Pump B is then started. After the system stabilizes, system flow rate will be...

A. the same as the initial flow rate.

B. less than twice the initial flow rate.

C. twice the initial flow rate.

D. more than twice the initial flow rate.

ANSWER: B.

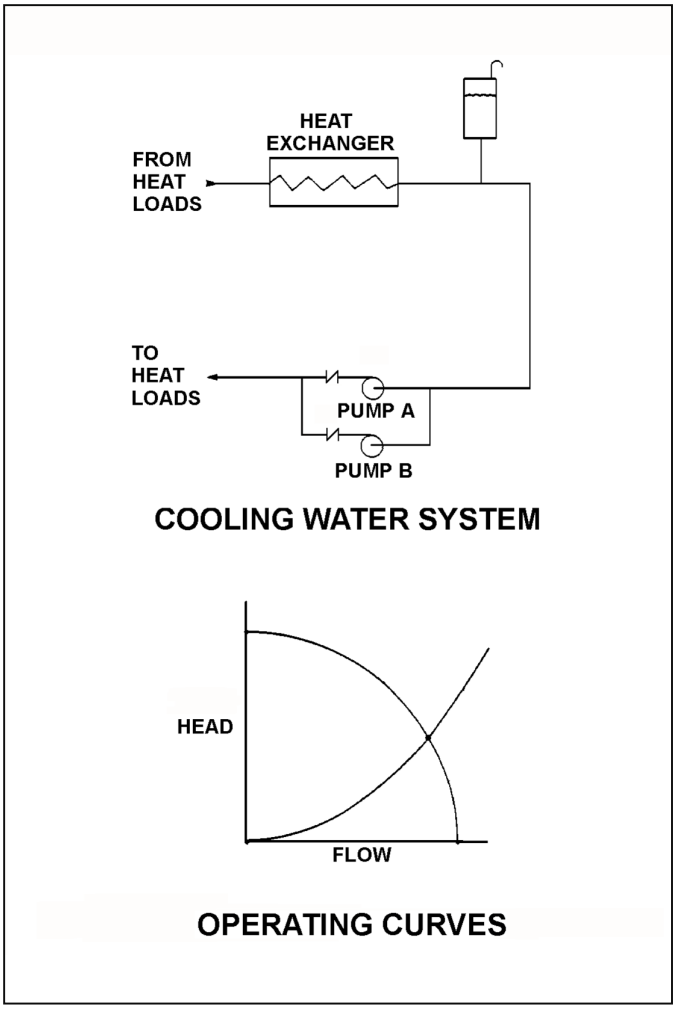

TOPIC: 291004
KNOWLEDGE: K1.05 [2.8/2.9]
QID: B1221

A centrifugal pump is operating with the following parameters in a closed system:

Pump head = 50 psid
Flow rate = 200 gpm
Power input = 3 KW

Pump speed is increased and flow rate increases to 400 gpm. Which one of the following is the value of the new power consumption?

A. 6 KW

B. 9 KW

C. 24 KW

D. 27 KW

ANSWER: C.

TOPIC: 291004
KNOWLEDGE: K1.05 [2.8/2.9]
QID: B1320

The discharge head of a variable-speed centrifugal pump will increase if the...

A. pump suction pressure is increased.

B. speed of the pump decreases.

C. pump discharge valve is opened farther.

D. temperature of the fluid being pumped increases.

ANSWER: A.

TOPIC: 291004
KNOWLEDGE: K1.05 [2.8/2.9]
QID: B1519

An AC motor-driven centrifugal pump is operating with the following parameters:

Flow rate = 300 gpm
Power input = 4 KW

Pump speed is increased and flow rate increases to 400 gpm.

Which one of the following is the approximate value of the new power consumption?

A. 5.3 KW

B. 7.1 KW

C. 9.5 KW

D. 11.7 KW

ANSWER: C.

TOPIC: 291004
KNOWLEDGE: K1.05 [2.8/2.9]
QID: B1619

A multi-speed centrifugal pump is operating with a flow rate of 3,000 gpm. Which one of the following approximates the new flow rate if the speed is decreased from 3,600 rpm to 2,400 rpm?

A. 1,000 gpm

B. 1,500 gpm

C. 2,000 gpm

D. 2,500 gpm

ANSWER: C.

TOPIC: 291004
KNOWLEDGE: K1.05 [2.8/2.9]
QID: B1719 (P1729)

A motor-driven centrifugal pump is operating with the following parameters:

Speed = 1,800 rpm
Motor current = 40 amps
Pump head = 20 psid
Pump flow rate = 400 gpm

What will be the approximate values of pump head and motor current if pump speed is decreased to 1,200 rpm?

A. 13 psid, 18 amps

B. 13 psid, 12 amps

C. 9 psid, 18 amps

D. 9 psid, 12 amps

ANSWER: D.

TOPIC: 291004
KNOWLEDGE: K1.05 [2.8/2.9]
QID: B2321 (P2329)

A multi-speed centrifugal pump is operating at 3,600 rpm with a flow rate of 3,000 gpm. Which one of the following approximates the new flow rate if the speed is decreased to 3,000 rpm?

A. 1,000 gpm

B. 1,500 gpm

C. 2,000 gpm

D. 2,500 gpm

ANSWER: D.

TOPIC: 291004
KNOWLEDGE: K1.05 [2.8/2.9]
QID: B2419 (P2424)

A centrifugal pump is operating with the following parameters:

Pump head = 60 psid
Flow rate = 300 gpm
Power input = 4 KW

Pump speed is increased and flow rate increases to 400 gpm.

Which one of the following is the approximate value of the new power consumption?

A. 5.3 KW

B. 7.1 KW

C. 9.5 KW

D. 11.7 KW

ANSWER: C.

TOPIC: 291004
KNOWLEDGE: K1.05 [2.8/2.9]
QID: B2718 (P2723)

Refer to the drawing showing two operating points for the same centrifugal pump (see figure below).

Operating point A was generated from pump performance data taken six months ago. Current pump performance data was used to generate operating point B. Which one of the following would cause the observed difference between operating points A and B?

A. The pump discharge valve was more open when data was collected for operating point A.

B. The pump discharge valve was more closed when data was collected for operating point A.

C. The pump internal components have worn since data was collected for operating point A.

D. The system piping head loss has increased since data was collected for operating point A.

ANSWER: C.

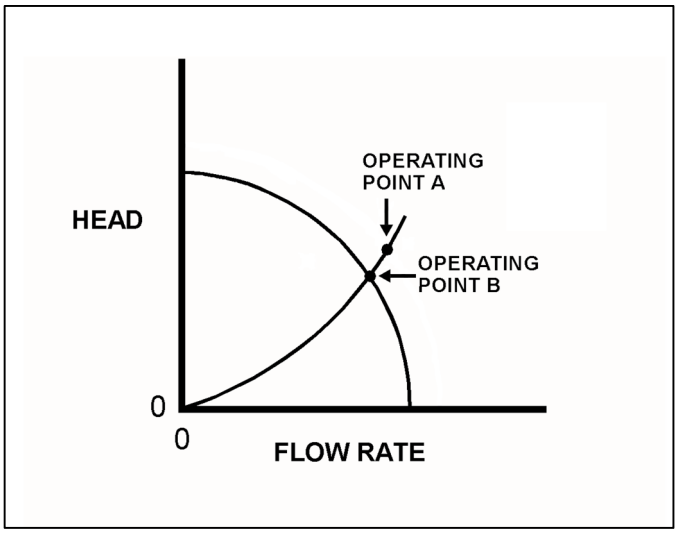

TOPIC: 291004
KNOWLEDGE: K1.05 [2.8/2.9]
QID: B3419 (P1429)

A variable-speed centrifugal pump is driven by an AC motor with the following initial conditions:

Pump speed = 400 rpm
Motor current = 40 amps
Pump head = 60 psid

If pump speed is increased to 1,600 rpm, what will be the new pump head?

A. 240 psid

B. 480 psid

C. 960 psid

D 1,440 psid

ANSWER: C.

TOPIC: 291004
KNOWLEDGE: K1.05 [2.8/2.9]
QID: B4211 (P4211)

Refer to the drawing of an operating cooling water system (see figure below).

Which one of the following changes to the cooling water system will result in a higher cooling water pump flow rate and a reduced pump discharge head?

A. Increase pump speed by 20 percent.

B. Decrease pump speed by 20 percent.

C. Isolate one of the two in-service heat loads.

D. Place the third system heat load in service.

ANSWER: D.

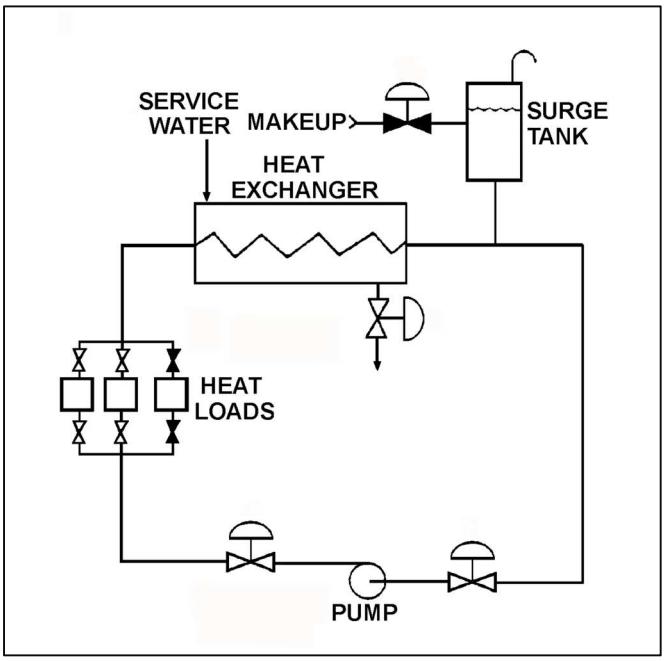

TOPIC: 291004
KNOWLEDGE: K1.05 [2.8/2.9]
QID: B6910 (P6910)

The discharge valve for a radial-flow centrifugal cooling water pump is closed in preparation for starting the pump.

After the pump is started, the following stable pump pressures are observed:

Pump discharge pressure = 30 psig
Pump suction pressure = 10 psig

With the discharge valve still closed, if the pump speed is doubled, what will be the new pump discharge pressure?

A. 80 psig

B. 90 psig

C. 120 psig

D. 130 psig

ANSWER: B.

TOPIC: 291004
KNOWLEDGE: K1.05 [2.8/2.9]
QID: B7210 (P7212)

A centrifugal pump is used to provide makeup water to a storage tank that is 30 feet high. The pump is located at the base of the tank. The pump can be aligned to fill the tank via a top connection or a bottom connection using piping of equal lengths and diameters. The tank is currently half full.

With the pump in operation, the pump will have the highest discharge pressure if the pump is aligned to fill the tank via the _____ connection; and the tank will become full in the least amount of time if the pump is aligned to fill the tank via the _____ connection.

A. top; top

B. top; bottom

C. bottom; top

D. bottom; bottom

ANSWER: B.

TOPIC: 291004
KNOWLEDGE: K1.05 [2.8/2.0]
QID: B7311 (P7311)

Refer to the drawing of an operating cooling water system (see figure below).

Which one of the following changes to the cooling water system will result in a lower cooling water pump flow rate and a higher pump discharge head?

A. Decrease pump speed by 20 percent.

B. Increase pump speed by 20 percent.

C. Isolate one of the two in-service heat loads.

D. Place the third system heat load in service.

ANSWER: C.

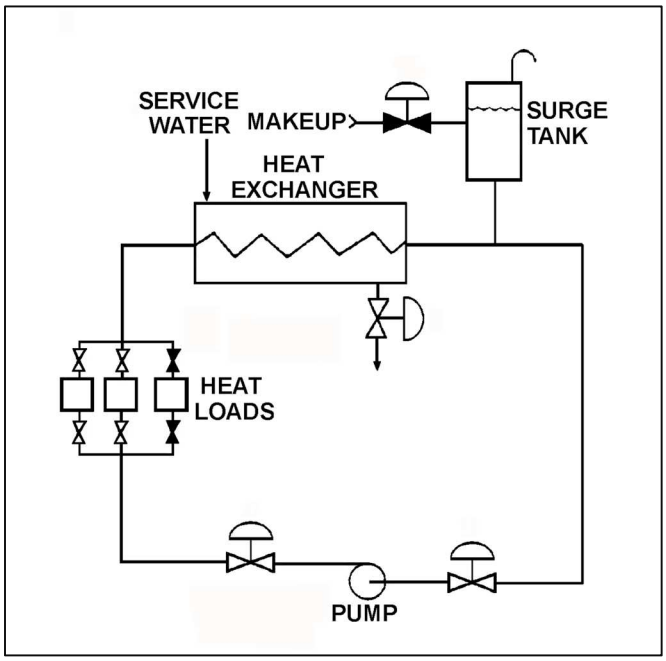

TOPIC: 291004
KNOWLEDGE: K1.05 [2.8/2.9]
QID: B7411 (P7412)

Refer to the drawing of an operating cooling water system (see figure below). The pump discharge valve is partially throttled to produce the following initial pump operating parameters:

Pump discharge pressure = 45 psig
Pump suction pressure = 15 psig
Pump flow rate = 120 gpm

After a few hours of operation, the current pump operating parameters are as follows:

Pump discharge pressure = 48 psig
Pump suction pressure = 18 psig
Pump flow rate: = 120 gpm

Which one of the following could be responsible for the change in pump operating parameters?

A. The pump speed increased with no other changes to the system.

B. The surge tank level increased with no other changes to the system.

C. The pump discharge valve was closed further while pump speed increased.

D. The pump discharge valve was closed further while surge tank level increased.

ANSWER: B.

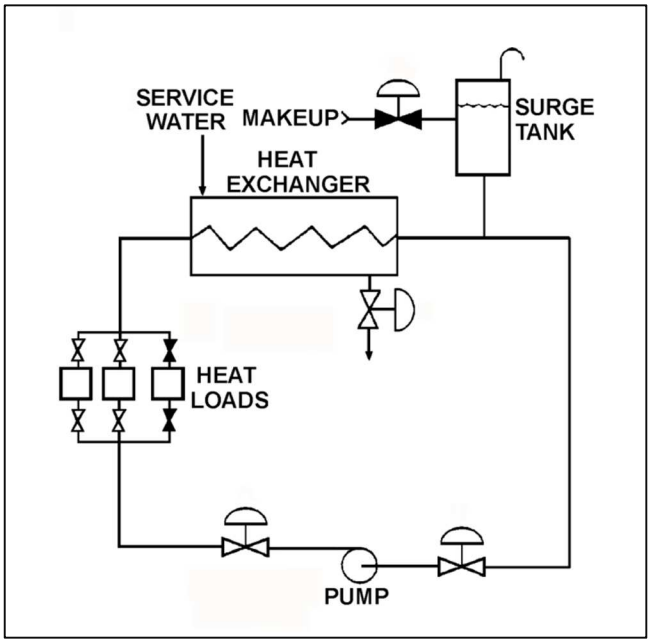

TOPIC: 291004
KNOWLEDGE: K1.05 [2.8/2.9]
QID: B7604 (P7604)

Refer to the pump and system curves (see figure below) for a centrifugal pump operating in a cooling water system.

Operating point A existed when data was taken six months ago. Operating point B is the current operating point. Which one of the following could be responsible for the difference between the operating points?

A. The pump discharge valve was more open when the data was collected for operating point A.

B. The pump discharge valve was more closed when the data was collected for operating point A.

C. The pump was rotating faster when the data was collected for operating point A.

D. The pump was rotating slower when the data was collected for operating point A.

ANSWER: D.

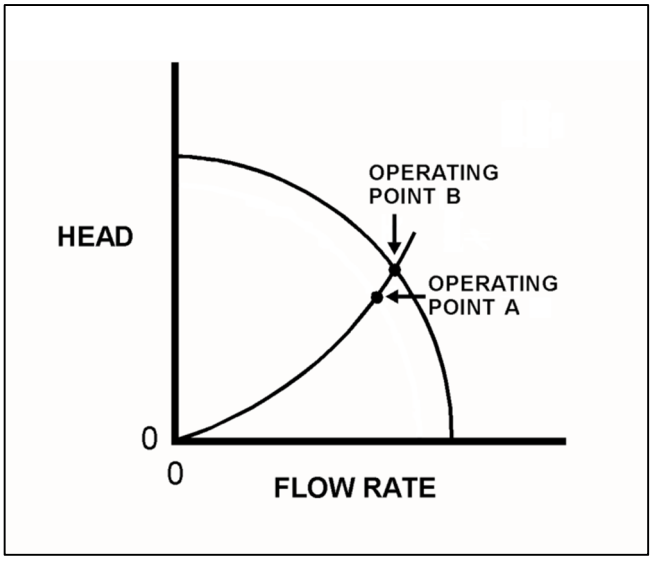

TOPIC: 291004
KNOWLEDGE: K1.05 [2.8/2.9]
QID: B7614 (P7614)

A centrifugal pump is used to provide makeup water to a vented storage tank that is 30 feet high. The pump is located at the base of the tank. The pump can be aligned to fill the tank via a top connection or a bottom connection using piping of equal lengths and diameters. The tank is currently half full.

With the pump in operation, the pump will have the lowest initial discharge pressure if the pump is aligned to fill the tank via the _____ connection; and the tank will require the longest amount of time to become completely full if the pump is aligned to fill the tank via the _____ connection.

A. top; top

B. top; bottom

C. bottom; top

D. bottom; bottom

ANSWER: C.

TOPIC: 291004
KNOWLEDGE: K1.06 [3.3/3.3]
QID: B21

Which one of the following will increase reactor recirculation pump available net positive suction head? (Assume all other parameters remain constant.)

A. Loss of feedwater heating while at 80 percent power

B. Increase in reactor coolant temperature from 100°F to 200°F during a reactor startup

C. Decrease in reactor pressure during a normal reactor shutdown

D. Decrease in reactor water level from the normal level to just below the low-level alarm level

ANSWER: A.

TOPIC: 291004
KNOWLEDGE: K1.06 [3.3/3.3]
QID: B25

What will occur by operating a positive displacement pump with insufficient net positive suction head?

A. Slip

B. Decreased pump speed

C. Water hammer

D. Vapor binding

ANSWER: D.

TOPIC: 291004
KNOWLEDGE: K1.06 [3.3/3.3]
QID: B121 (P1120)

Which one of the following operations in a closed system will cause a decrease in available net positive suction head for a centrifugal pump?

A. Decreasing the inlet fluid temperature.

B. Increasing the pump discharge pressure.

C. Throttling open the pump suction valve.

D. Throttling open the pump discharge valve.

ANSWER: D.

TOPIC: 291004
KNOWLEDGE: K1.06 [3.3/3.3]
QID: B222

Which one of the following conditions will result in a decrease in the available net positive suction head of a reactor recirculation pump?

A. Carryunder decreases.

B. Feedwater flow increases.

C. Recirculation flow rate increases.

D. Feedwater inlet subcooling increases.

ANSWER: C.

TOPIC: 291004
KNOWLEDGE: K1.06 [3.3/3.3]
QID: B720

Which one of the following will decrease the available net positive suction head to the reactor recirculation pumps? (Assume all other parameters remain constant.)

A. Increase in reactor water level from the normal level to just below the high-level alarm

B. Increase in reactor coolant temperature from 100°F to 200°F during a reactor startup

C. Increase in reactor pressure during a reactor startup

D. Loss of feedwater heating while at 80 percent power

ANSWER: B.

TOPIC: 291004
KNOWLEDGE: K1.06 [3.3/3.3]
QID: B1120

When flow from a centrifugal pump is increased by opening the discharge valve further, required net positive suction head (NPSH) _____; and available NPSH _____.

A. decreases; decreases

B. decreases; increases

C. increases; increases

D. increases; decreases

ANSWER: D.

TOPIC: 291004
KNOWLEDGE: K1.06 [3.3/3.3]
QID: B1222

Which one of the following changes in nuclear power plant status will bring the reactor recirculation system closer to the condition in which the recirculation pump will cavitate?

A. During a plant shutdown, reactor recirculation pump suction temperature decreases while reactor pressure remains constant.

B. Reactor recirculation pump speed is increased.

C. Reactor water level increases.

D. Extraction steam is isolated from one high-pressure feed water heater during power operations.

ANSWER: B.

TOPIC: 291004
KNOWLEDGE: K1.06 [3.3/3.3]
QID: B1621 (P1221)

Refer to the drawing of a cooling water system (see figure below).

The available net positive suction head for the centrifugal pump will be increased by...

A. opening surge tank makeup valve A to raise tank level.

B. throttling heat exchanger service water valve B more closed.

C. throttling pump discharge valve C more open.

D. throttling pump suction valve D more closed.

ANSWER: A.

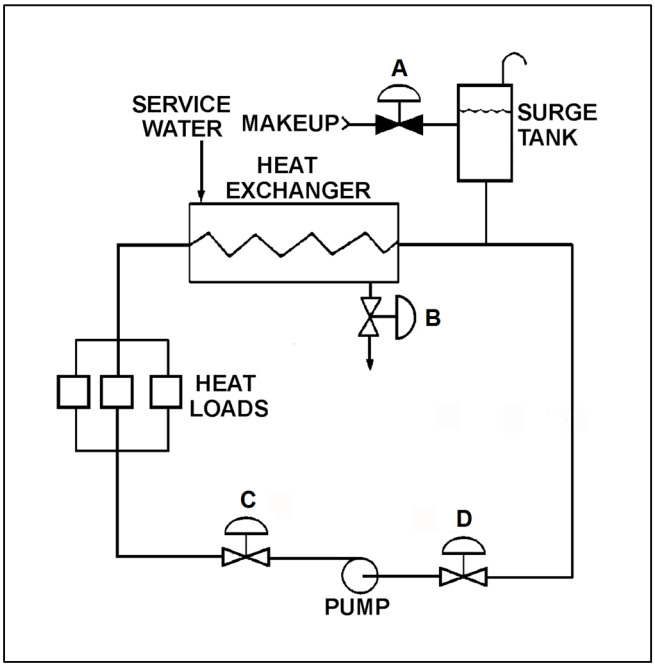

TOPIC: 291004
KNOWLEDGE: K1.06 [3.3/3.3]
QID: B1918 (P1521)

Refer to the drawing of a cooling water system (see figure below).

The available net positive suction head for the centrifugal pump will be decreased by...

A. opening surge tank makeup valve A to raise tank level.

B. throttling heat exchanger service water valve B more open.

C. throttling pump discharge valve C more open.

D. reducing the heat load on the cooling water system.

ANSWER: C.

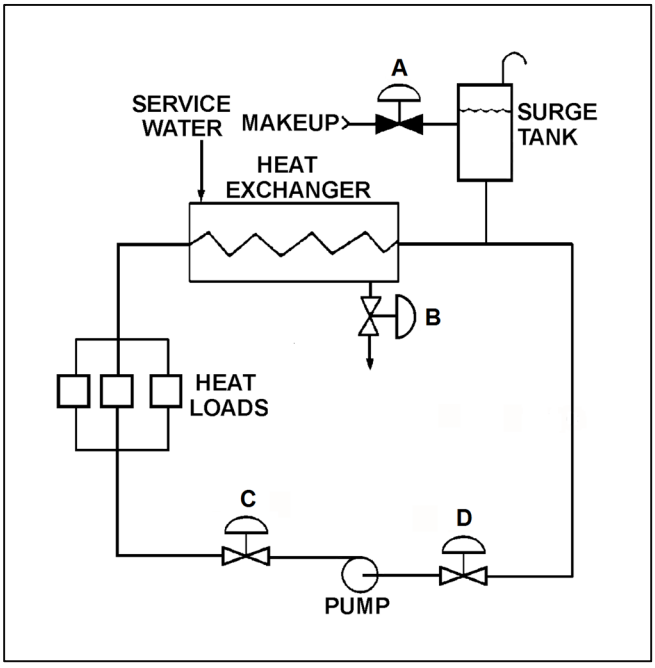

TOPIC: 291004
KNOWLEDGE: K1.06 [3.3/3.3]
QID: B2019 (P2025)

A variable-speed centrifugal pump is operating at rated speed in an open system. If the pump speed is decreased by 50 percent, available net positive suction head (NPSH) will _____; and required NPSH will _____.

A. increase; decrease

B. increase; remain the same

C. decrease; decrease

D. decrease; remain the same

ANSWER: A.

TOPIC: 291004
KNOWLEDGE: K1.06 [3.3/3.3]
QID: B2119 (P1822)

Refer to the drawing of an operating cooling water system (see figure below).

Which one of the following will increase available net positive suction head for the centrifugal pump?

A. Draining the surge tank to decrease level by 10 percent.

B. Positioning heat exchanger service water valve B more closed.

C. Positioning pump discharge valve C more closed.

D. Positioning pump suction valve D more closed.

ANSWER: C.

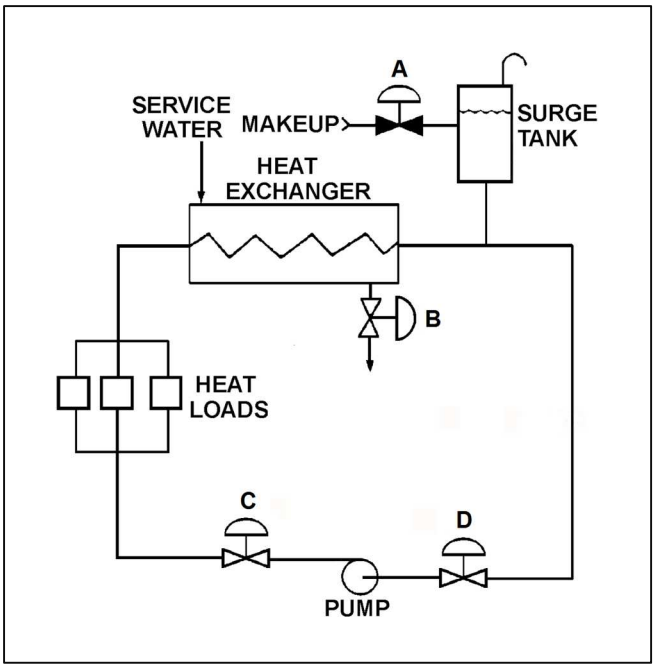

TOPIC: 291004
KNOWLEDGE: K1.06 [3.3/3.3]
QID: B2223 (P114)

A motor-driven centrifugal pump is operating in an open system with its discharge valve throttled to 50 percent open. If the discharge valve is fully opened, available net positive suction head (NPSH) will _____; and required NPSH will _____.

A. remain the same; increase

B. remain the same; remain the same

C. decrease; increase

D. decrease; remain the same

ANSWER: C.

TOPIC: 291004
KNOWLEDGE: K1.06 [3.3/3.3]
QID: B2319 (P2323)

Refer to the drawing of an operating cooling water system (see figure below).

Which one of the following will decrease available net positive suction head for the centrifugal pump?

A. Adding water to the surge tank to raise level by 10 percent.

B. Positioning heat exchanger service water valve B more open.

C. Positioning pump discharge valve C more open.

D. Reducing heat loads on the cooling water system by 10 percent.

ANSWER: C.

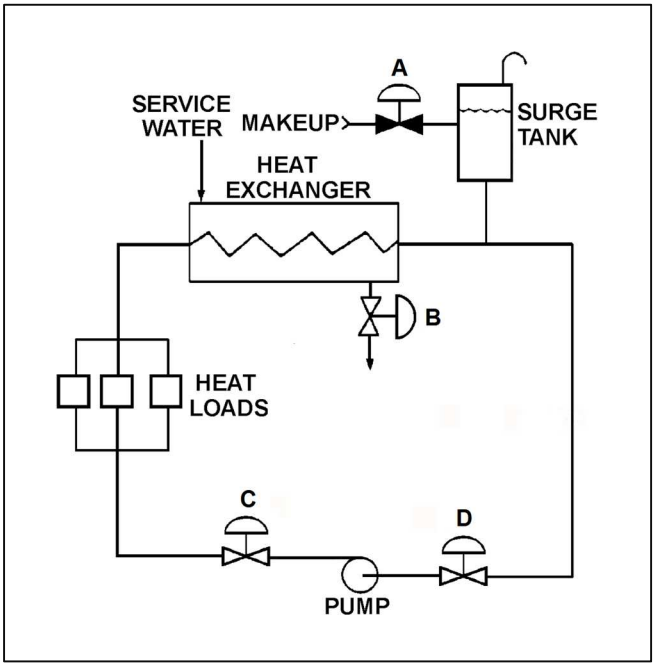

TOPIC: 291004
KNOWLEDGE: K1.06 [3.3/3.3]
QID: B2420 (P2424)

A variable speed motor-driven centrifugal pump is operating at 50 percent speed in an open system. If the pump speed is increased to 100 percent, available net positive suction head (NPSH) will _____; and required NPSH will _____.

A. increase; remain the same

B. increase; increase

C. decrease; remain the same

D. decrease; increase

ANSWER: D.

TOPIC: 291004
KNOWLEDGE: K1.06 [3.3/3.3]
QID: B2518 (P2222)

Refer to the drawing of a cooling water system (see figure below).

The available net positive suction head for the centrifugal pump will be decreased by...

A. increasing surge tank level by 5 percent.

B. throttling heat exchanger service water valve B more open.

C. throttling pump discharge valve C more closed.

D. increasing the heat loads on the cooling water system.

ANSWER: D.

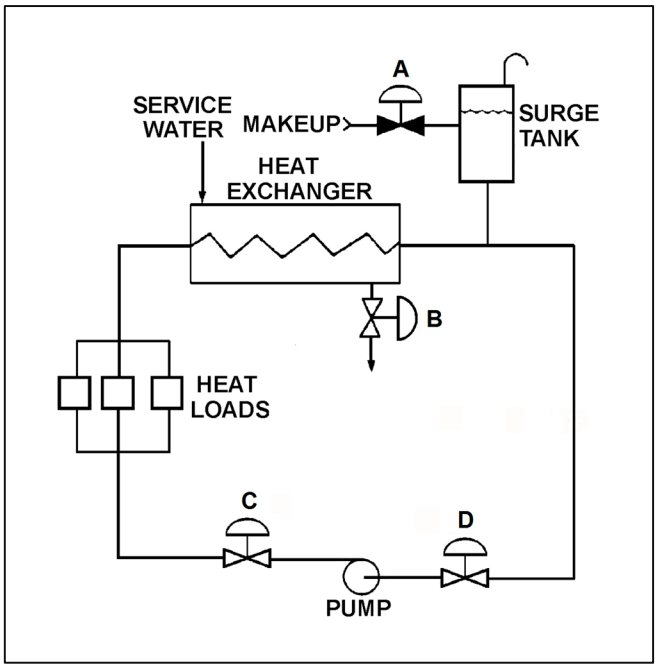

TOPIC: 291004
KNOWLEDGE: K1.06 [3.3/3.3]
QID: B2621 (P2621)

A cooling water pump is operating with pump suction parameters as follows:

Suction Temperature = 124°F
Suction Pressure = 11.7 psia

What is the approximate available net positive suction head (NPSH) for the pump? (Neglect the contribution of the suction fluid velocity to NPSH.)

A. 23 feet

B. 27 feet

C. 31 feet

D. 35 feet

ANSWER: A.

TOPIC: 291004
KNOWLEDGE: K1.06 [3.3/3.3]
QID: B2920 (P2921)

Refer to the drawing of an operating cooling water system (see figure below).

Which one of the following will increase the available net positive suction head for the centrifugal pump?

A. Draining the surge tank to decrease level by 10 percent.

B. Positioning the service water valve B more closed.

C. Positioning the pump discharge valve C more open.

D. Reducing the heat loads on the cooling water system.

ANSWER: D.

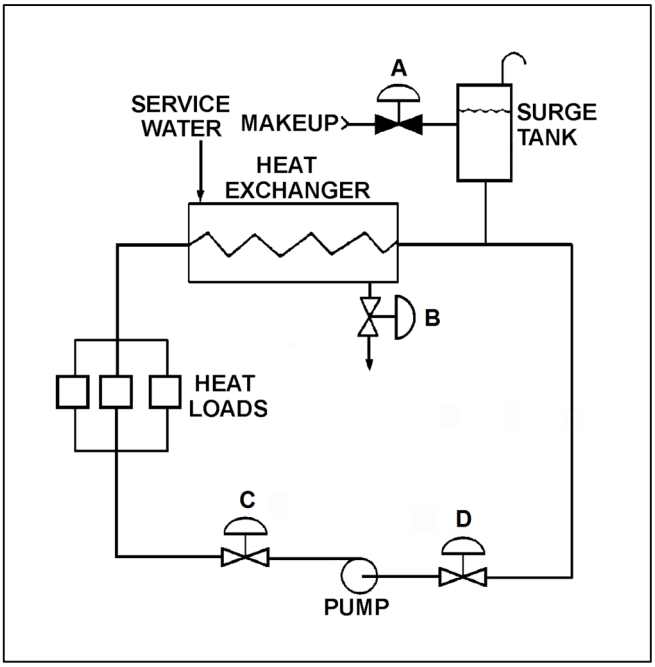

TOPIC: 291004
KNOWLEDGE: K1.06 [3.3/3.3]
QID: B3219 (P3221)

A centrifugal pump is taking suction on an open storage tank that has been filled to a level of 40 feet with 10,000 gallons of 60°F water. The pump is located at the base of the tank, takes a suction from the bottom of the tank, and discharges to a lake.

Given:

- The pump is currently operating at its design flow rate of 200 gpm and a total developed head of 150 feet.
- The pump requires 4 feet of net positive suction head.

How will the centrifugal pump flow rate be affected as the water storage tank level decreases?

A. Flow rate will remain constant until the pump begins to cavitate at a tank level of about 4 feet.

B. Flow rate will remain constant until the pump becomes air bound when the tank empties.

C. Flow rate will gradually decrease until the pump begins to cavitate at a tank level of about 4 feet.

D. Flow rate will gradually decrease until the pump becomes air bound when the tank empties.

ANSWER: D.

TOPIC: 291004
KNOWLEDGE: K1.06 [3.3/3.3]
QID: B4011 (P4010)

Refer to the drawing below of a centrifugal pump taking suction from the bottom of an open storage tank containing water at 66°F. Pump and water level elevations are indicated in the figure. Assume standard atmospheric pressure.

Assuming that pump suction head loss is negligible, what is the approximate value of net positive suction head available to the pump?

A. 6 feet

B. 13 feet

C. 20 feet

D. 25 feet

ANSWER: C.

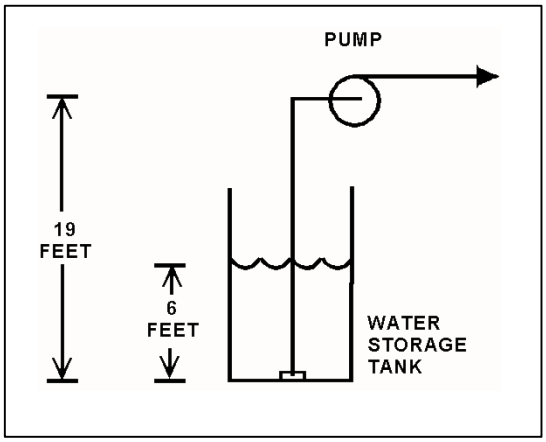

TOPIC: 291004
KNOWLEDGE: K1.06 [3.3/3.3]
QID: B4113 (P4110)

Refer to the drawing of an elevated centrifugal pump taking suction from the bottom of an open storage tank containing water at 66°F (see figure below). Assume standard atmospheric pressure.

The pump requires 4.0 feet of net positive suction head (NPSH). Assume that pump suction head loss is negligible.

If tank water level is allowed to decrease continuously, at what approximate water level will the pump begin to cavitate?

A. 34 feet

B. 29 feet

C. 21 feet

D. 16 feet

ANSWER: C.

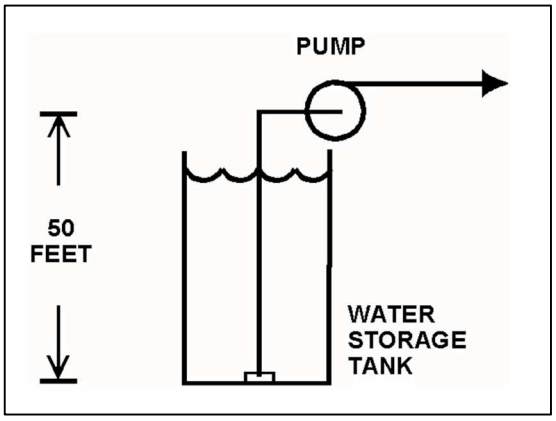

TOPIC: 291004
KNOWLEDGE: K1.06 [3.3/3.3]
QID: B4410 (P4410)

Refer to the drawing of a centrifugal pump taking suction from the bottom of an open storage tank containing water at 66°F (see figure below). Pump and water level elevations are indicated in the figure. Assume standard atmospheric pressure.

Assuming that pump suction head loss is negligible, what is the approximate value of net positive suction head available to the pump?

A. 6 feet

B. 12 feet

C. 39 feet

D. 45 feet

ANSWER: D.

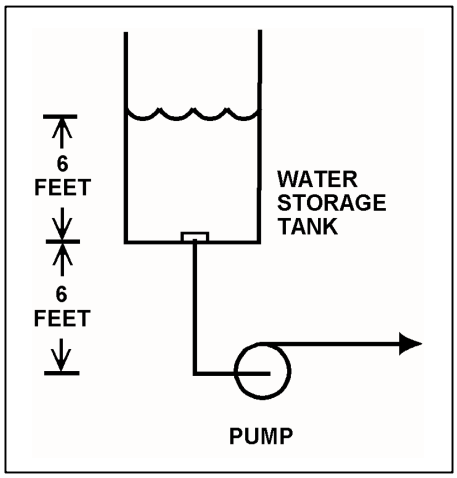

TOPIC: 291004
KNOWLEDGE: K1.06 [3.3/3.3]
QID: B4710 (P4712)

A centrifugal cooling water pump is operating in an open system with its discharge valve fully open. If the discharge valve is repositioned to 50 percent open, the pump's available net positive suction head (NPSH) will _____; and the pump's required NPSH will _____.

A. remain the same; decrease

B. remain the same; remain the same

C. increase; decrease

D. increase; remain the same

ANSWER: C.

TOPIC: 291004
KNOWLEDGE: K1.06 [3.3/3.3]
QID: B5210 (P5211)

Consider a centrifugal pump that is taking suction from the bottom of an open water storage tank. (See figure below.)

Given:

- The tank contains 60°F water.
- The eye of the pump impeller is located 50 feet above the bottom of the tank.
- The pump requires a minimum net positive suction head of 4 feet.

Which one of the following describes the effect on pump operation if tank water level is allowed to continuously decrease?

A. The pump will operate normally until tank water level decreases below approximately 20 feet, at which time the pump will cavitate.

B. The pump will operate normally until tank water level decreases below approximately 16 feet, at which time the pump will cavitate.

C. The pump will operate normally until the pump suction becomes uncovered, at which time the pump will cavitate.

D. The pump will operate normally until the pump suction becomes uncovered, at which time the pump will become air bound.

ANSWER: A.

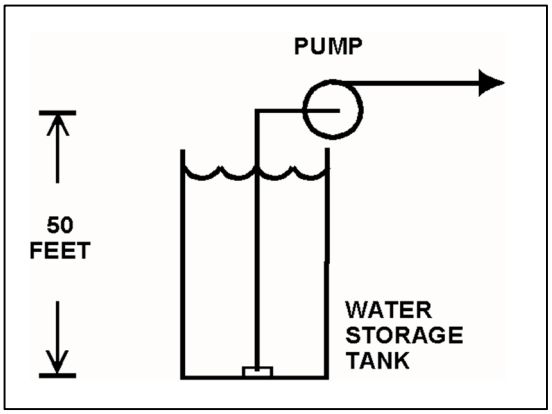

TOPIC: 291004
KNOWLEDGE: K1.06 [3.3/3.3]
QID: B5510 (P5511)

Refer to the drawing of a steam condenser, hotwell, and condensate pump (see figure below).

Given the following:

- The eye of the pump impeller is located 6.0 feet below the bottom of the hotwell.
- The pump requires 10.0 feet of net positive suction head (NPSH).
- Condenser pressure is 1.2 psia.
- Hotwell water temperature is 90°F.
- Pump suction head losses are zero.

What is the minimum hotwell water level necessary to provide the required NPSH?

A. 1.2 feet

B. 2.8 feet

C. 4.0 feet

D. 5.2 feet

ANSWER: B.

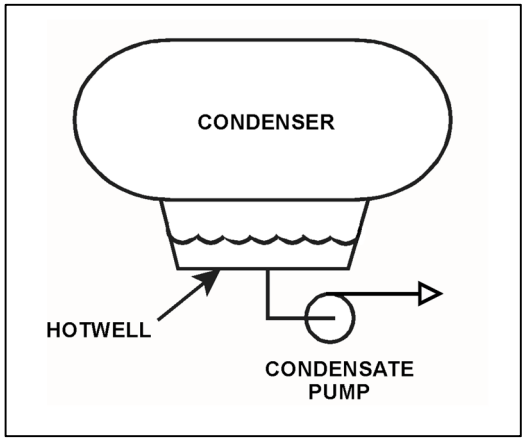

TOPIC: 291004
KNOWLEDGE: K1.06 [3.3/3.3]
QID: B5610 (P5611)

A centrifugal pump is taking suction on a water storage tank and delivering the makeup water to a cooling water system. The pump will have the lowest net positive suction head requirement if the pump is operated at a relatively _____ speed with a _____ discharge flow control valve.

A. high; fully open

B. high; throttled

C. low; fully open

D. low; throttled

ANSWER: D.

TOPIC: 291004
KNOWLEDGE: K1.06 [3.3/3.3]
QID: B5810 (P5810)

Refer to the drawing below of a centrifugal pump taking suction from the bottom of an open storage tank containing water at 75°F. Pump and water level elevations are indicated in the figure. Assume standard atmospheric pressure.

Assuming that pump suction head loss is negligible, what is the approximate value of net positive suction head available to the pump.

A. 5 feet

B. 10 feet

C. 17 feet

D. 23 feet

ANSWER: D.

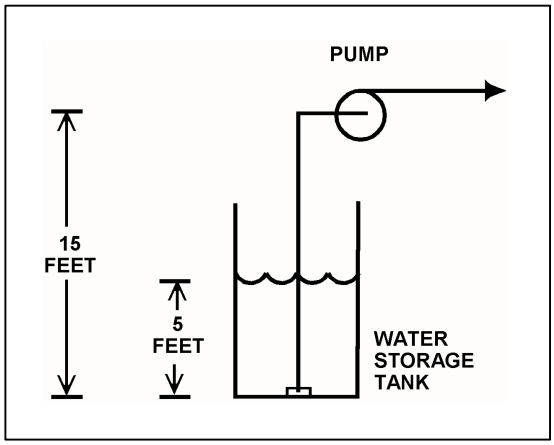

TOPIC: 291004
KNOWLEDGE: K1.06 [3.3/3.3]
QID: B5911 (P5910)

Refer to the drawing of a steam condenser, hotwell, and condensate pump (see figure below).

Given the following initial conditions:

- Condenser pressure is 1.2 psia.
- Condensate temperature is 96°F.
- Hotwell level is 10 feet above the condensate pump suction.

Which one of the following will provide the greatest increase in NPSH available to the condensate pump? (Assume that condenser pressure does not change.)

A. Hotwell level decreases by 6 inches.

B. Hotwell level increases by 6 inches.

C. Condensate temperature decreases by 6°F.

D. Condensate temperature increases by 6°F.

ANSWER: B.

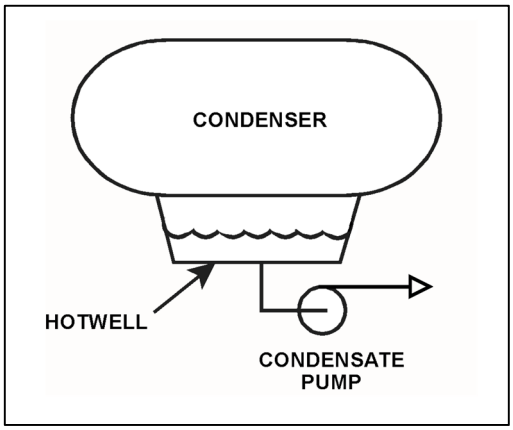

TOPIC: 291004
KNOWLEDGE: K1.06 [3.3/3.3]
QID: B6211 (P6211)

A centrifugal pump is taking suction on a water storage tank and discharging through a flow control valve. The pump will have the highest net positive suction head requirement if the pump is operated at a _____ speed with a _____ discharge flow control valve.

A. high; fully open

B. high; throttled

C. low; fully open

D. low; throttled

ANSWER: A.

TOPIC: 291004
KNOWLEDGE: K1.06 [3.3/3.3]
QID: B6410 (P6410)

An operating centrifugal pump has a net positive suction head (NPSH) requirement of 150 feet. Water at 300°F is entering the pump. Which one of the following is the lowest listed pump inlet pressure that will provide adequate NPSH for the pump?

A. 60 psia

B. 83 psia

C. 108 psia

D. 127 psia

ANSWER: D.

TOPIC: 291004
KNOWLEDGE: K1.06 [3.3/3.3]
QID: B6510 (P6510)

Refer to the drawing of a steam condenser, hotwell, and condensate pump (see figure below).

Given the following:

- The eye of the pump impeller is located 6.0 feet below the bottom of the hotwell.
- Hotwell water level is 6.0 feet.
- Hotwell water temperature is 90°F.
- Condenser pressure is 1.3 psia.
- Fluid velocity and friction head losses are zero.

What is the net positive suction head available to the condensate pump?

A. 6.0 feet

B. 7.4 feet

C. 12.0 feet

D. 13.4 feet

ANSWER: D.

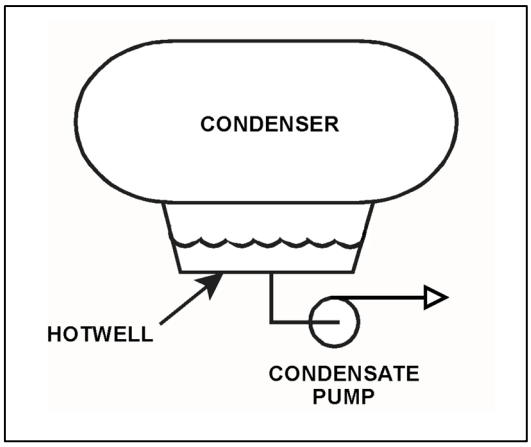

TOPIC: 291004
KNOWLEDGE: K1.06 [3.3/3.3]
QID: B6811 (P6810)

The current conditions for a centrifugal water pump are as follows:

Pump suction pressure = 140 psia
Pump suction temperature = 300°F

The pump requires a net positive suction head (NPSH) of 150 feet for pumping water at 300°F. Which one of the following is the lowest listed pump suction pressure that will provide the required NPSH for the current pump suction temperature?

A. 132 psia

B. 128 psia

C. 73 psia

D. 67 psia

ANSWER: B.

TOPIC: 291004
KNOWLEDGE: K1.06 [3.3/3.3]
QID: B6911 (P6911)

A centrifugal pump is taking suction from an open water storage tank. The pump is located at the base of the tank, takes a suction from the bottom of the tank, and discharges to a pressurized system.

Given:

- The tank is filled to a level of 26 feet with 60°F water.
- The pump is currently operating at 50 gpm.
- The pump requires 30 feet of net positive suction head.

Which one of the following describes the current pump status, and how the pump flow rate will be affected as the level in the storage tank decreases?

A. The pump is currently cavitating; pump flow rate will decrease continuously as tank level decreases.

B. The pump is currently cavitating; pump flow rate will remain about the same until the tank empties.

C. The pump is currently <u>not</u> cavitating; pump flow rate will gradually decrease with tank level and then rapidly decrease when cavitation begins at a lower tank level.

D. The pump is currently <u>not</u> cavitating; pump flow rate will gradually decrease with tank level and then rapidly decrease as the pump becomes air bound when the tank empties.

ANSWER: D.

TOPIC: 291004
KNOWLEDGE: K1.06 [3.3/3.3]
QID: B7112 (P7110)

Refer to the drawing of a centrifugal pump taking suction from a reservoir.

The pump is located on shore, with the eye of the pump 4 feet higher than the reservoir water level. The pump's suction line extends 4 feet below the surface of the reservoir. Which one of the following modifications would increase the pump's available net positive suction head? (Assume the reservoir is at a uniform temperature and ignore any changes in suction line head loss due to friction.)

A. Raise the pump and suction line by 2 feet.

B. Lower the pump and suction line by 2 feet.

C. Lengthen the suction line to take a suction from 2 feet deeper.

D. Shorten the suction line to take a suction from 2 feet shallower.

ANSWER: B.

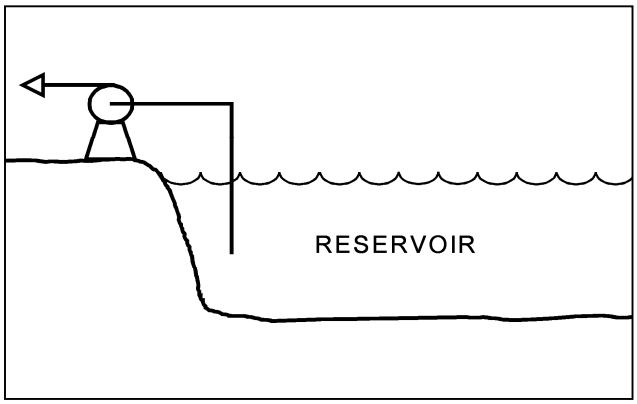

TOPIC: 291004
KNOWLEDGE: K1.06 [3.3/3.3]
QID: B7624 (P7624)

Refer to the drawing of a centrifugal pump taking suction from a reservoir (see figure below).

The pump is located on shore, with the eye of the pump 4 feet higher than the reservoir water level. The pump's suction line extends 4 feet below the surface of the reservoir. Which one of the following modifications would decrease the pump's available net positive suction head? (Assume the reservoir is at a uniform temperature and ignore any changes in suction line head loss due to friction.)

A. Raise the pump and suction line by 2 feet.

B. Lower the pump and suction line by 2 feet.

C. Lengthen the suction line to take a suction from 2 feet deeper.

D. Shorten the suction line to take a suction from 2 feet shallower.

ANSWER: A.

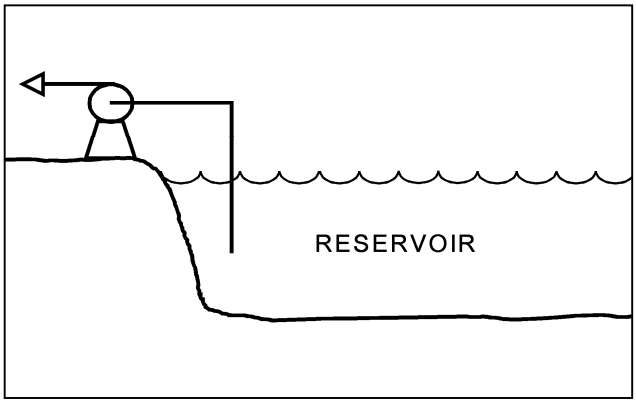

TOPIC: 291004
KNOWLEDGE: K1.06 [3.3/3.3]
QID: B7643 (P7643)

Refer to the drawing of a centrifugal pump with a water storage tank for its suction source. The storage tank is open to the atmosphere and contains 20 feet of water at 60°F. The pump is currently stopped.

If the temperature of the water in the storage tank and pump suction piping increases to 80°F, with the accompanying water expansion, the suction head for the pump will _____; and the available net positive suction head for the pump will _____.

A. increase; increase

B. increase; decrease

C. remain the same; increase

D. remain the same; decrease

ANSWER: B.

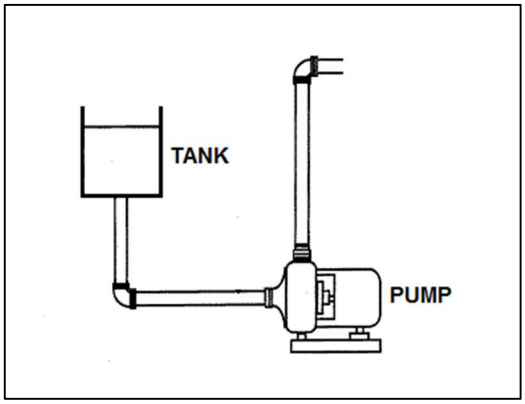

TOPIC: 291004
KNOWLEDGE: K1.06 [3.3/3.3]
QID: B7664 (P7664)

A centrifugal pump is taking suction from an open water storage tank. The pump is located at the base of the tank, takes a suction from the bottom of the tank, and discharges to a pressurized system.

Given:

- The storage tank is filled to a level of 26 feet with 60°F water.
- The pump requires 45 feet of net positive suction head.
- The pump is currently operating at 50 gpm.

Which one of the following describes the current pump status, and how the pump flow rate will be affected as the level in the storage tank decreases?

A. The pump is currently cavitating; pump flow rate will decrease continuously as tank level decreases.

B. The pump is currently cavitating; pump flow rate will remain about the same until the tank empties.

C. The pump is currently <u>not</u> cavitating; pump flow rate will gradually decrease with tank level, and then rapidly decrease when the tank empties.

D. The pump is currently <u>not</u> cavitating; pump flow rate will gradually decrease with tank level, and then rapidly decrease when cavitation begins before the tank empties.

ANSWER: D.

TOPIC: 291004
KNOWLEDGE: K1.06 [3.3/3.3]
QID: B7683 (P7683)

A centrifugal pump is operating normally in a closed cooling water system. If system pressure is increased by 10 psi, the available net positive suction head (NPSH) for the pump will _____; and the pump mass flow rate will _____. (Assume the water density does not change and the minimum required NPSH for the pump is maintained.)

A. increase; increase

B. increase; remain the same

C. decrease; decrease

D. decrease; remain the same

ANSWER: B.

TOPIC: 291004
KNOWLEDGE: K1.06 [3.3/3.3]
QID: B7704 (P7704)

Refer to the drawing of a centrifugal pump with a water storage tank for its suction source. The storage tank is open to the atmosphere and contains 20 feet of water at 90°F. The pump is currently stopped.

If the temperature of the water in the storage tank and pump suction piping decreases to 70°F, with the accompanying water contraction, the suction head for the pump will _____; and the available net positive suction head for the pump will _____.

A. decrease; increase

B. decrease; remain the same

C. remain the same; increase

D. remain the same; remain the same

ANSWER: A.

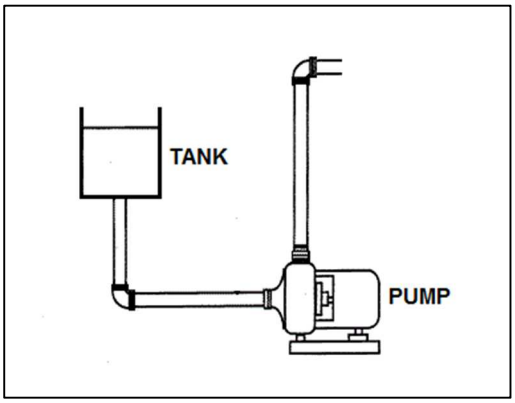

TOPIC: 291004
KNOWLEDGE: K1.07 [2.8/2.8]
QID: B115 (P1924)

A constant-speed radial-flow centrifugal pump motor draws the least current when the pump is...

A. at maximum rated flow conditions.

B. operating on recirculation flow only.

C. accelerating to normal speed during start.

D. at shutoff head with no recirculation flow.

ANSWER: D.

TOPIC: 291004
KNOWLEDGE: K1.07 [2.8/2.8]
QID: B119

A centrifugal pump is initially operating at normal discharge pressure and flow conditions with the pump discharge valve fully open. Then, the discharge valve is throttled to the 50 percent open position. Which one of the following parameter changes will occur when the discharge valve is throttled?

A. Pump motor current decreases.

B. Pump flow rate increases.

C. Pump discharge head decreases.

D. Available net positive suction head decreases.

ANSWER: A.

TOPIC: 291004
KNOWLEDGE: K1.07 [2.8/2.8]
QID: B419 (P1824)

Refer to the drawing of a cooling water system (see figure below).

The centrifugal pump was initially circulating water at 100°F. Over several hours, the water temperature increased to 200°F. Assuming system flow rate (gpm) was constant, pump motor amps _____ during the heatup because _____.

A. decreased; water density decreased

B. increased; water density decreased

C. decreased; pump shaft speed increased

D. increased; pump shaft speed increased

ANSWER: A.

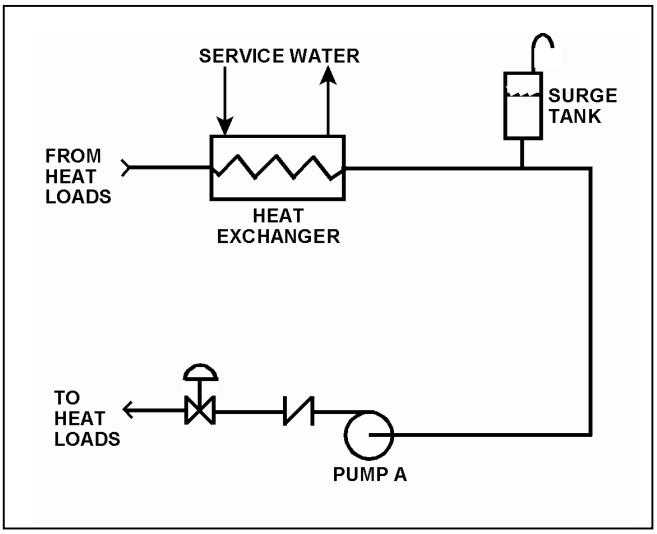

TOPIC: 291004
KNOWLEDGE: K1.07 [2.8/2.8]
QID: B922 (P1622)

An AC motor-driven centrifugal pump is circulating water at 180°F with a motor current of 100 amps. After several hours, system temperature has changed such that the water density has increased by 4 percent.

Assuming pump head and volumetric flow rate do not change, which one of the following is the new pump motor current?

A. 84 amps

B. 96 amps

C. 104 amps

D. 116 amps

ANSWER: C.

TOPIC: 291004
KNOWLEDGE: K1.07 [2.8/2.8]
QID: B1026

A motor-driven centrifugal pump exhibited indications of pump failure while being started. Which one of the following pairs of observations indicate that the pump failure is a sheared impeller shaft?

A. Excessive duration of high starting current and motor breaker trips.

B. Excessive duration of high starting current and <u>no</u> change in system flow rate.

C. Lower than normal running current and motor breaker trips.

D. Lower than normal running current and <u>no</u> change in system flow rate.

ANSWER: D.

TOPIC: 291004
KNOWLEDGE: K1.07 [2.8/2.8]
QID: B1726 (P2827)

A cooling water pump is being driven by an AC induction motor. Which one of the following describes how and why pump motor current will change if the pump shaft shears?

A. Decreases, due to decreased pump work.

B. Decreases, due to decreased counter electromotive force.

C. Increases, due to increased pump work.

D. Increases, due to decreased counter electromotive force.

ANSWER: A.

TOPIC: 291004
KNOWLEDGE: K1.07 [2.8/2.8]
QID: B2020 (P2023)

A reactor recirculation pump is circulating reactor coolant at 150°F. After several hours the reactor coolant temperature has increased to 200°F.

Assuming recirculation pump flow rate (gpm) is constant, recirculation pump motor amps will have _____ because _____.

A. decreased; coolant density has decreased

B. decreased; system head losses have increased

C. increased; coolant density has increased

D. increased; system head losses have decreased

ANSWER: A.

TOPIC: 291004
KNOWLEDGE: K1.07 [2.8/2.8]
QID: B2219 (P1420)

An AC motor-driven centrifugal pump was initially circulating water at 150°F in a cooling water system. Over several hours, the circulating water temperature decreased to 100°F. Assuming system flow rate (gpm) remained constant, pump motor current _____ because _____ increased.

A. increased; water density

B. increased; motor efficiency

C. decreased; water density

D. decreased; motor efficiency

ANSWER: A.

TOPIC: 291004
KNOWLEDGE: K1.07 [2.8/2.8]
QID: B2423 (P2124)

A centrifugal pump in a cooling water system is operating with a motor current of 200 amps. After several hours, the system water density has increased by 3 percent, while the pump head and volumetric flow rate have remained the same.

Which one of the following is the new pump motor current?

A. 203 amps

B. 206 amps

C. 218 amps

D. 236 amps

ANSWER: B.

TOPIC: 291004
KNOWLEDGE: K1.07 [2.8/2.8]
QID: B2520 (P2520)

A constant-speed centrifugal pump motor draws the most current when the pump is...

A. at maximum rated flow conditions.

B. operating at runout flow.

C. accelerating to normal speed during start.

D. at shutoff head with no recirculation flow.

ANSWER: C.

TOPIC: 291004
KNOWLEDGE: K1.07 [2.8/2.8]
QID: B2822 (P2821)

An AC motor-driven centrifugal pump was just started. During the start, motor current remained peaked for 6 seconds before decreasing to standard running current. Normally, the starting current peak lasts about 4 seconds.

Which one of the following could have caused the extended starting current peak?

A. The pump shaft was seized and did not turn.

B. The pump was initially rotating slowly in the reverse direction.

C. The pump discharge check valve was stuck closed and did not open.

D. The pump was initially air bound, and then primed itself after 6 seconds of operation.

ANSWER: B.

TOPIC: 291004
KNOWLEDGE: K1.07 [2.8/2.8]
QID: B2921 (P2925)

A centrifugal pump is circulating water at 180°F with a pump motor current of 200 amps. After several hours, system temperature has changed such that the water density has increased by 6 percent.

Assuming pump head and volumetric flow rate do not change, which one of the following is the new pump motor current?

A. 203 amps

B. 206 amps

C. 212 amps

D. 224 amps

ANSWER: C.

TOPIC: 291004
KNOWLEDGE: K1.07 [2.8/2.8]
QID: B3820 (P3822)

An AC motor-driven centrifugal water pump was just started. During the start, motor current remained peaked for 2 seconds, and then decreased and stabilized at about one-fifth the standard running current. Normally, the starting current peak lasts about 4 seconds.

Which one of the following could have caused the abnormal start indications above?

A. The pump shaft was initially seized and the motor breaker opened.

B. The pump was initially rotating slowly in the reverse direction.

C. The pump was initially air bound, and then primed itself after 2 seconds of operation.

D. The coupling between the motor and pump shafts was left disconnected after maintenance.

ANSWER: D.

TOPIC: 291004
KNOWLEDGE: K1.07 [2.8/2.8]
QID: B4811 (P4811)

A radial-flow centrifugal cooling water pump is driven by an AC induction motor. The pump can supply cooling water to several heat loads, all of which are in parallel alignment. The following pump conditions initially exist:

Pump motor current	=	100 amps
Pump flow rate	=	400 gpm
Pump suction temperature	=	70°F

Four hours later, the motor is drawing 95 amps. Which one of the following could be responsible for the observed decrease in motor amps?

A. The temperature of the cooling water being pumped decreased to 60°F with no change in pump flow rate.

B. The temperature of the cooling water being pumped increased to 80°F with no change in pump flow rate.

C. Cooling water flow was established to an additional heat load with no change in the temperature of the cooling water being pumped.

D. Cooling water flow was isolated from an out-of-service heat load with no change in the temperature of the cooling water being pumped.

ANSWER: D.

TOPIC: 291004
KNOWLEDGE: K1.07 [2.8/2.8]
QID: B6311 (P6310)

A radial-flow centrifugal cooling water pump is driven by an AC induction motor. The pump can supply cooling water to several heat loads, all of which are in parallel alignment. The following pump conditions initially exist:

Pump motor current	=	100 amps
Pump flow rate	=	400 gpm
Pump suction temperature	=	70°F

Four hours later, the motor is drawing 105 amps. Which one of the following could be responsible for the observed increase in motor current?

A. The temperature of the cooling water being pumped decreased to 60°F with no change in pump flow rate.

B. The temperature of the cooling water being pumped increased to 80°F with no change in pump flow rate.

C. Cooling water flow was established to an additional heat load with no change in the temperature of the cooling water being pumped.

D. Cooling water flow was isolated from an out-of-service heat load with no change in the temperature of the cooling water being pumped.

ANSWER: C.

TOPIC: 291004
KNOWLEDGE: K1.08 [2.8/2.8]
QID: B519

Many large centrifugal pumps are interlocked so that the pump will not start unless its discharge valve is at least 90 percent closed. This interlock is provided to minimize the...

A. duration of the pump motor starting current.

B. required net positive suction head.

C. loading on the pump thrust bearing.

D. pump discharge pressure.

ANSWER: A.

TOPIC: 291004
KNOWLEDGE: K1.08 [2.8/2.8]
QID: B619

Which one of the following pumps should be started with its discharge valve throttled?

A. Centrifugal

B. Gear

C. Reciprocating

D. Screw

ANSWER: A.

TOPIC: 291004
KNOWLEDGE: K1.08 [2.8/2.8]
QID: B821 (P2622)

Which one of the following contains two reasons for starting a typical radial-flow centrifugal pump with the discharge piping full of water and the discharge valve closed?

A. Prevent pump runout and prevent motor overspeed.

B. Prevent pump runout and ensure lubrication of pump seals.

C. Prevent water hammer and ensure adequate pump recirculation flow.

D. Prevent water hammer and prevent excessive duration of starting current.

ANSWER: D.

TOPIC: 291004
KNOWLEDGE: K1.08 [2.8/2.8]
QID: B1822 (P1325)

Some large centrifugal pumps are interlocked so that the pump will not start unless its discharge valve is at least 90 percent closed. This interlock is provided to minimize...

A. pump discharge pressure.

B. heating of the pumped fluid.

C. the potential for cavitation at the pump suction.

D. the duration of the pump motor starting current.

ANSWER: D.

TOPIC: 291004
KNOWLEDGE: K1.08 [2.8/2.8]
QID: B2120 (P624)

Which one of the following specifies the proper pump discharge valve position and the basis for that position when starting a large centrifugal pump?

A. Discharge valve fully open to reduce duration of motor starting current

B. Discharge valve throttled to reduce duration of motor starting current

C. Discharge valve fully open to ensure adequate pump net positive suction head

D. Discharge valve throttled to ensure adequate pump net positive suction head

ANSWER: B.

TOPIC: 291004
KNOWLEDGE: K1.11 [2.4/2.5]
QID: B520 (P2322)

A centrifugal fire water pump takes suction from an open storage tank and discharges through a fire hose. Which one of the following will cause the pump to operate at shutoff head?

A. The fire hose nozzle is raised to an elevation that prevents any flow.

B. Suction temperature is increased to the point that gas binding occurs.

C. Pump speed is adjusted to the value at which cavitation occurs.

D. Suction pressure is adjusted until available net positive suction head is reduced to zero feet.

ANSWER: A.

TOPIC: 291004
KNOWLEDGE: K1.11 [2.4/2.5]
QID: B1823 (P109)

When a centrifugal pump is operating at shutoff head, it is pumping at _____ capacity and _____ discharge head.

A. maximum; maximum

B. maximum; minimum

C. minimum; maximum

D. minimum; minimum

ANSWER: C.

TOPIC: 291004
KNOWLEDGE: K1.11 [2.4/2.5]
QID: B2018 (P2022)

A variable-speed centrifugal fire water pump is taking a suction on an open storage tank and discharging through a 4-inch diameter fire hose and through a nozzle located 50 feet above the pump.

Which one of the following will cause the pump to operate at shutoff head?

A. The fire hose is replaced with a 6-inch diameter fire hose.

B. The fire hose is replaced with a 2-inch diameter fire hose.

C. Pump speed is increased until steam formation at the eye of the pump prevents pump flow.

D. Pump speed is decreased until pump discharge pressure is insufficient to cause flow.

ANSWER: D.

TOPIC: 291004
KNOWLEDGE: K1.11 [2.4/2.5]
QID: B2121 (P1523)

Which one of the following describes centrifugal pump operating parameters at shutoff head?

A. High discharge pressure, low flow, low power demand

B. High discharge pressure, high flow, low power demand

C. Low discharge pressure, low flow, high power demand

D. Low discharge pressure, high flow, high power demand

ANSWER: A.

TOPIC: 291004
KNOWLEDGE: K1.11 [2.4/2.5]
QID: B2721 (P2721)

A centrifugal fire water pump takes suction from an open storage tank and discharges through a fire hose. Which one of the following will cause the pump to operate at shutoff head?

A. A firefighter inadvertently severs the fire hose.

B. The fire hose becomes completely crimped in a fire door.

C. Fire water storage tank level drops below the pump suction tap.

D. A firefighter adjusts the fire hose nozzle spray pattern from DELUGE to FOG.

ANSWER: B.

TOPIC: 291004
KNOWLEDGE: K1.11 [2.4/2.5]
QID: B3320 (P2820)

A centrifugal fire water pump takes suction from an open storage tank and discharges through a fire hose. Which one of the following will cause the pump to operate at shutoff head?

A. A firefighter inadvertently severs the fire hose.

B. The fire hose becomes partially crimped in a fire door.

C. Fire water storage tank level drops below the pump suction tap.

D. A firefighter adjusts the fire hose nozzle spray pattern from DELUGE to OFF.

ANSWER: D.

TOPIC: 291004
KNOWLEDGE: K1.12 [2.8/2.8]
QID: B23

Which one of the following will occur if a motor-driven centrifugal pump is operated continuously at runout conditions?

A. Pump failure, due to excessive pump cavitation.

B. Pump failure, due to overheating caused by the increased impeller-to-casing friction.

C. Motor failure, due to excessive current being drawn through the motor windings.

D. Motor failure, due to overheating caused by increased windage losses.

ANSWER: C.

TOPIC: 291004
KNOWLEDGE: K1.12 [2.8/2.8]
QID: B321

A centrifugal pump is operating at rated conditions in an open system. If a system transient results in the pump operating at runout, which one of the following indications will be present?

A. Increased discharge pressure

B. Decreased pump motor current

C. Increased pump vibration

D. Decreased pump flow rate

ANSWER: C.

TOPIC: 291004
KNOWLEDGE: K1.12 [2.8/2.8]
QID: B424

Operating a motor-driven centrifugal pump under "pump runout" conditions can cause...

A. excessive pump head, cavitation, and motor overload.

B. motor overload, cavitation, and increased pump vibration.

C. increased pump vibration, excessive pump head, and cavitation.

D. no damage, because all pumps and motors are designed to operate without failure under pump runout conditions.

ANSWER: B.

TOPIC: 291004
KNOWLEDGE: K1.12 [2.8/2.8]
QID: B1024 (P1721)

Refer to the drawing of centrifugal pump and system operating curves (see figure below).

Which point represents pump operation at runout conditions?

A. Point A

B. Point B

C. Point C

D. Point D

ANSWER: C.

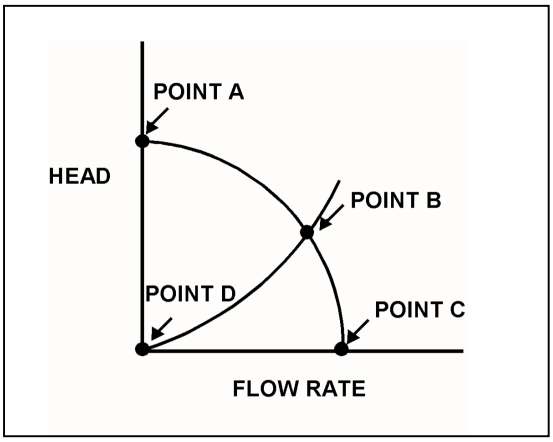

TOPIC: 291004
KNOWLEDGE: K1.12 [2.8/2.8]
QID: B1323 (P1623)

A centrifugal pump is operating at its maximum design flow rate, delivering water through two parallel valves. Valve A is half open, and valve B is one quarter open.

Which one of the following will occur if both valves are fully opened?

A. The pump will operate at shutoff head.

B. The pump available net positive suction head will increase.

C. The pump required net positive suction head will decrease.

D. The pump will operate at runout conditions.

ANSWER: D.

TOPIC: 291004
KNOWLEDGE: K1.12 [2.8/2.8]
QID: B1425

What adverse effect is caused by operating a motor-driven centrifugal pump under runout conditions?

A. Pump failure, due to overspeed of the pump impeller.

B Pump failure, due to excessive pump cavitation.

C Motor failure, due to excessive motor winding current.

D Motor failure, due to loss of cooling from pumped fluid.

ANSWER: C.

TOPIC: 291004
KNOWLEDGE: K1.12 [2.8/2.8]
QID: B1920 (P1123)

Which one of the following describes typical radial-flow centrifugal pump runout conditions?

A. High discharge pressure, low flow, high power demand

B. High discharge pressure, high flow, low power demand

C. Low discharge pressure, low flow, low power demand

D. Low discharge pressure, high flow, high power demand

ANSWER: D.

TOPIC: 291004
KNOWLEDGE: K1.12 [2.8/2.8]
QID: B3910 (P3910)

Refer to the drawing of a cooling water system in which only centrifugal pump A is operating and the common pump discharge valve is currently 90 percent open (see figure below).

An abnormal total heat load on the cooling water system is causing pump A to approach operation at runout conditions. Which one of the following will cause pump A to operate further away from runout conditions? (Assume that satisfactory available net positive suction head is maintained at all times.)

A. Starting pump B.

B. Raising the water level in the surge tank by 2 feet.

C. Decreasing heat exchanger service water flow rate by 10 percent.

D. Positioning the common pump discharge valve to 100 percent open.

ANSWER: A.

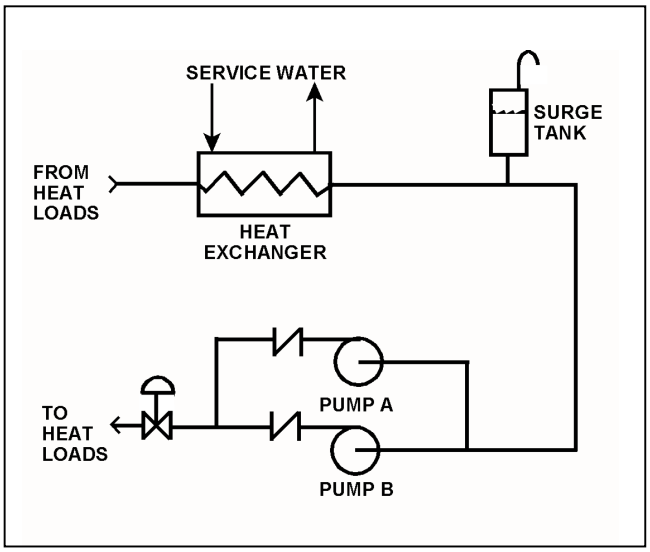

TOPIC: 291004
KNOWLEDGE: K1.12 [2.8/2.8]
QID: B5111 (P5111)

A flow-limiting venturi in the discharge piping of a centrifugal pump decreases the potential for the pump to experience...

A. runout

B. reverse flow

C. shutoff head

D. water hammer

ANSWER: A.

TOPIC: 291004
KNOWLEDGE: K1.13 [2.6/2.7]
QID: B325

Refer to the drawing of a cooling water system and the associated pump/system operating curves (see figure below).

Pumps A and B are identical single-speed centrifugal pumps and only pump A is operating. If pump B is started, system flow rate will be _____; and common pump discharge pressure will be _____.

A. the same; higher

B. higher; the same

C. the same; the same

D. higher; higher

ANSWER: D.

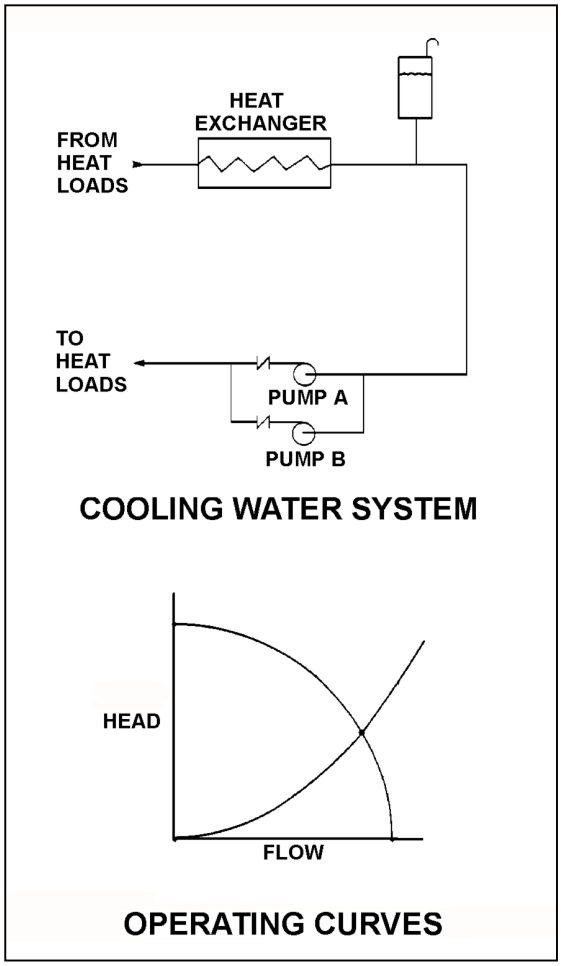

TOPIC: 291004
KNOWLEDGE: K1.13 [2.6/2.7]
QID: B521 (P2224)

A motor-driven centrifugal pump is operating in an open system with its discharge valve throttled to 50 percent. How will the pump be affected if the discharge valve is fully opened?

A. Total developed head decreases, and motor current decreases.

B. Total developed head increases, and available net positive suction head decreases.

C. The potential for pump cavitation decreases, and pump differential pressure decreases.

D. Available net positive suction head decreases, and pump differential pressure decreases.

ANSWER: D.

TOPIC: 291004
KNOWLEDGE: K1.13 [2.6/2.7]
QID: B622 (P2123)

A typical radial-flow centrifugal pump is operating at rated conditions in an open system with all valves fully open. If the pump discharge valve is throttled to 50 percent closed, pump discharge pressure will _____; and pump motor current will _____.

A. decrease; decrease

B. decrease; increase

C. increase; increase

D. increase; decrease

ANSWER: D.

TOPIC: 291004
KNOWLEDGE: K1.13 [2.6/2.7]
QID: B722 (P723)

Refer to the drawing of a lube oil temperature control system and the associated pump/system operating curves (see figure below).

The pump is operating at point B on the operating curve. If the temperature control valve modulates further closed, operating point B will be located on curve _____ closer to point _____.

A. 1; D

B. 2; A

C. 1; E

D. 2; C

ANSWER: B.

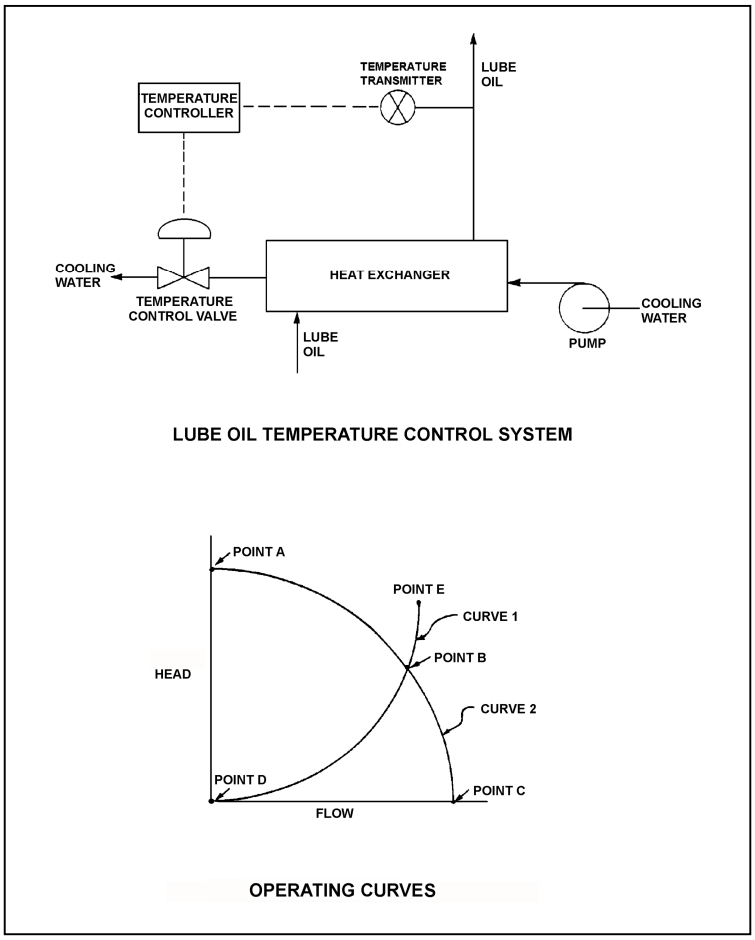

TOPIC: 291004
KNOWLEDGE: K1.13 [2.6/2.7]
QID: B823

Which one of the following actions will correct a cavitating centrifugal pump?

A. Increasing the pump speed

B. Lowering the pump suction pressure

C. Lowering the pump suction temperature

D. Cycling the pump off and on a few times

ANSWER: C.

TOPIC: 291004
KNOWLEDGE: K1.13 [2.6/2.7]
QID: B1122

A centrifugal pump is operating at rated conditions in an open system. If the pump discharge valve is fully closed, pump discharge pressure will _____; and motor current will _____.

A. increase; decrease

B. decrease; decrease

C. increase; increase

D. decrease; increase

ANSWER: A.

TOPIC: 291004
KNOWLEDGE: K1.13 [2.6/2.7]
QID: B1423 (P623)

Refer to the drawing of a lube oil temperature control system and the associated pump/system operating curves (see figure below).

The pump is initially operating at point B. If the temperature control valve modulates further open, operating point B will be located on curve _____ closer to point _____.

A. 1; D

B. 2; A

C. 1; E

D. 2; C

ANSWER: D.

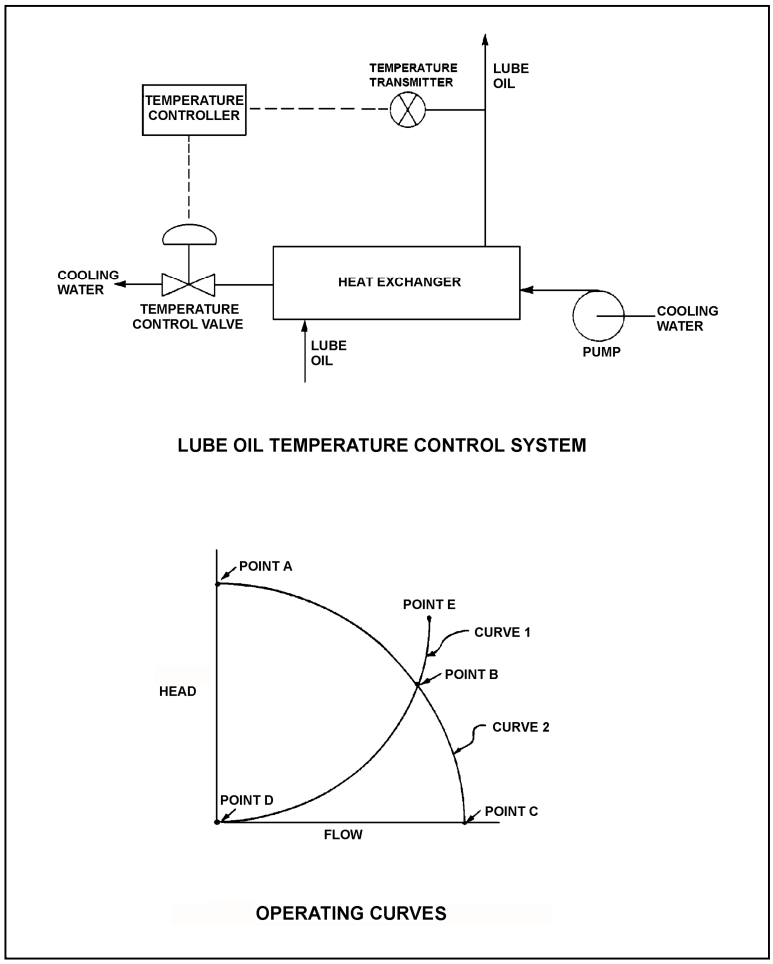

TOPIC: 291004
KNOWLEDGE: K1.13 [2.6/2.7]
QID: B1522

Which one of the following components of a centrifugal pump has the specific primary function of increasing the kinetic energy of a fluid?

A. Volute

B. Impeller

C. Diffuser

D. Discharge nozzle

ANSWER: B.

TOPIC: 291004
KNOWLEDGE: K1.13 [2.6/2.7]
QID: B1722 (P1725)

A typical single-stage radial-flow centrifugal pump is being returned to service following maintenance on its three-phase AC induction motor. Which one of the following will occur when the pump is started if two of the three motor power leads were inadvertently swapped during restoration?

A. The motor breaker will trip on instantaneous overcurrent.

B. The motor will <u>not</u> turn and will emit a humming sound.

C. The pump will rotate in the reverse direction with reduced or no flow rate.

D. The pump will rotate in the normal direction with reduced flow rate.

ANSWER: C.

TOPIC: 291004
KNOWLEDGE: K1.13 [2.6/2.7]
QID: B2323 (P2325)

Refer to the drawing of centrifugal pump and system operating curves (see figure below).

A centrifugal pump is initially operating at point B. If the pump speed is reduced by one-half, the new operating point will be located on curve _____ closer to point _____.

A. 1; D

B. 2; A

C. 1; E

D. 2; C

ANSWER: A.

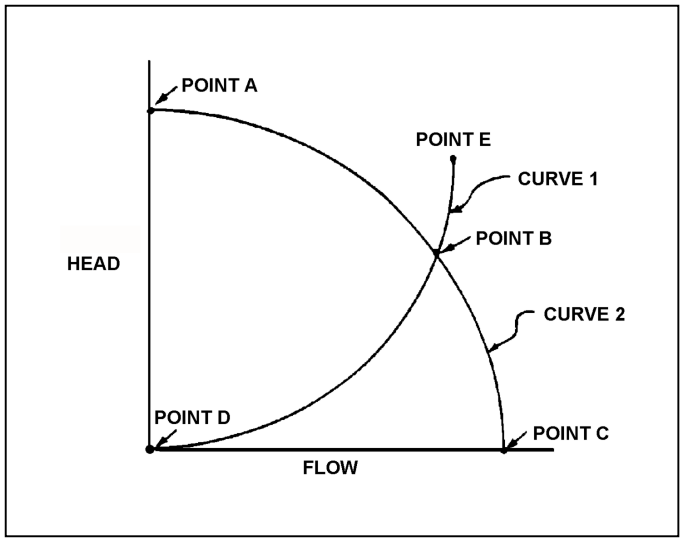

TOPIC: 291004
KNOWLEDGE: K1.13 [2.6/2.7]
QID: B2422 (P2422)

Refer to the drawing of a lube oil temperature control system (see figure below).

The pump is operating with the temperature control valve one-half open. If the temperature control valve modulates farther closed, system head loss will _____; and pump head will _____.

A. increase, decrease

B. increase, increase

C. decrease, decrease

D. decrease, increase

ANSWER: B.

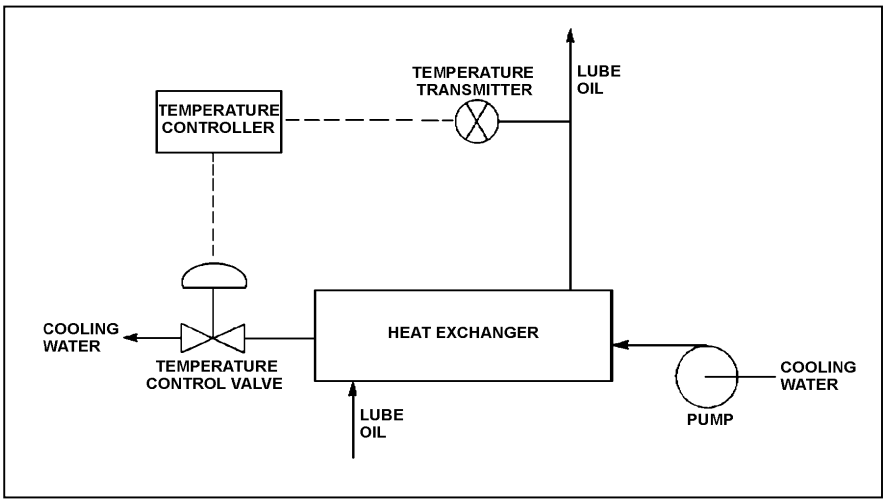

TOPIC: 291004
KNOWLEDGE: K1.13 [2.6/2.7]
QID: B2524 (P2523)

Refer to the drawing of a lube oil temperature control system and the associated pump/system operating curves (see figure below).

If the pump is initially operating at point B, how will the operating point change if the temperature controller setpoint is decreased by 10°F?

A. Operating point B will be located on curve 1 closer to point E.

B. Operating point B will be located on curve 1 closer to point D.

C. Operating point B will be located on curve 2 closer to point A.

D. Operating point B will be located on curve 2 closer to point C.

ANSWER: D.

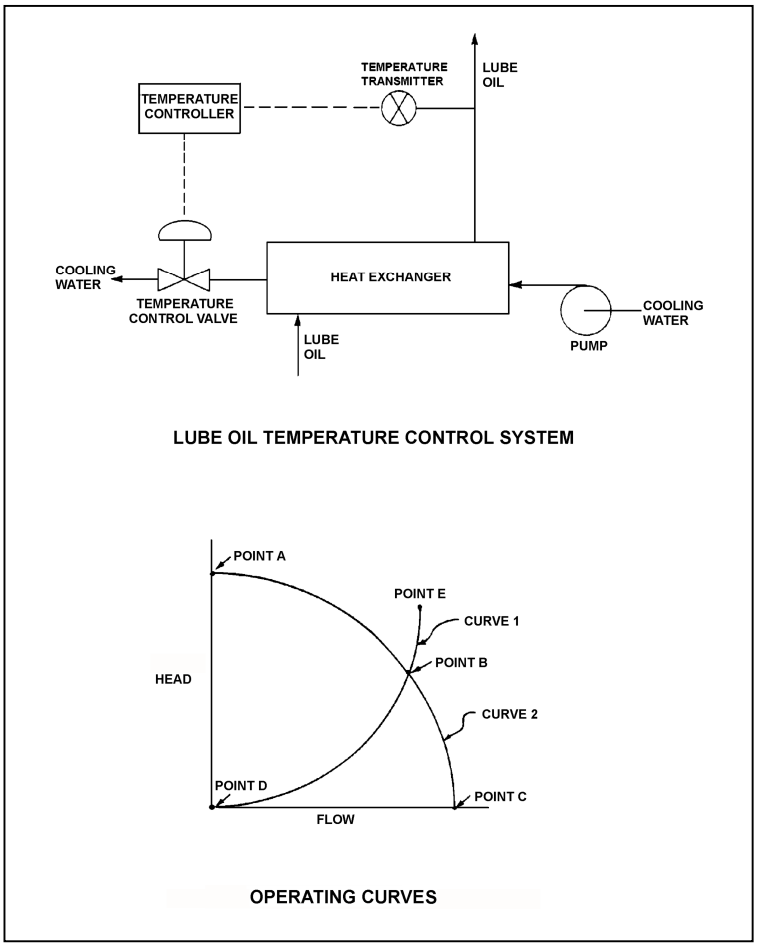

TOPIC: 291004
KNOWLEDGE: K1.13 [2.6/2.7]
QID: B2622 (P2624)

Which one of the following describes a reason for designing centrifugal pumps with suction nozzles that are larger than their discharge nozzles?

A. Increases total pump head by increasing the velocity head at the suction of the pump.

B. Increases the differential pressure across the pump by decreasing pump head loss.

C. Increases pump available net positive suction head by decreasing head loss at the pump suction.

D. Increases pump capacity by decreasing turbulence at the suction of the pump.

ANSWER: C.

TOPIC: 291004
KNOWLEDGE: K1.13 [2.6/2.7]
QID: B2623

Refer to the drawing of a cooling water system and the associated pump/system operating curves (see figure below).

Pumps A and B are identical single-speed centrifugal pumps and both pumps are operating. If pump B trips, after the system stabilizes, system flow rate will be...

A. more than one-half the original flow.

B. one-half the original flow.

C. less than one-half the original flow.

D. the same; only the pump head will change.

ANSWER: A.

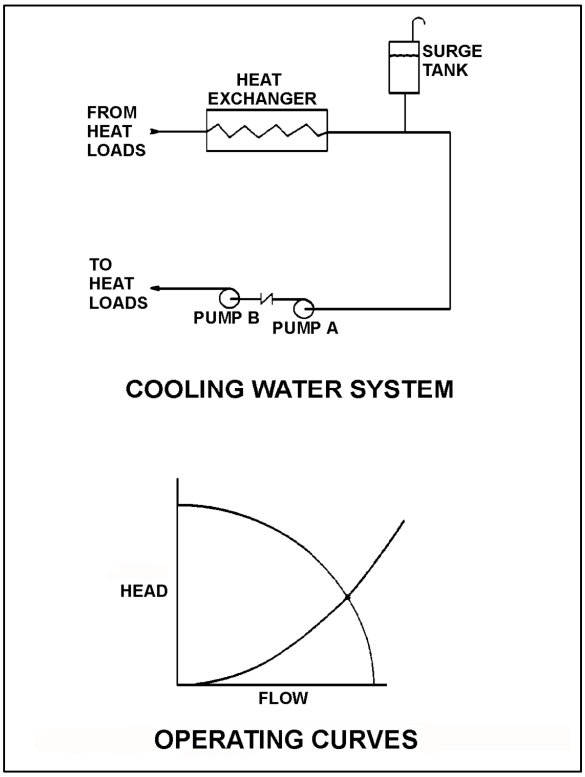

TOPIC: 291004
KNOWLEDGE: K1.13 [2.6/2.7]
QID: B3022 (P3020)

A centrifugal pump is needed to take suction on a water storage tank and deliver high pressure water to a water spray system. To minimize axial thrust on the pump shaft, the pump should have _____ stage(s); and to maximize the available NPSH at the impeller inlet, the pump should have a _____ suction impeller.

A. a single; single

B. a single; double

C. multiple opposed; single

D. multiple opposed; double

ANSWER: D.

TOPIC: 291004
KNOWLEDGE: K1.13 [2.6/2.7]
QID: B3522

A single-speed centrifugal pump is needed to supply river water to a storage facility. The pump must be capable of providing a very high flow rate at a low discharge pressure. Which one of the following types of centrifugal pumps is best suited for this application?

A. Single-stage, axial-flow

B. Single-stage, radial-flow

C. Multiple-stage, axial-flow

D. Multiple-stage, radial-flow

ANSWER: A.

TOPIC: 291004
KNOWLEDGE: K1.13 [2.6/2.7]
QID: B5812 (P5813)

Centrifugal pumps A and B are identical except that pump A uses a single-suction impeller while pump B uses a double-suction impeller. If both pumps are pumping water at the same inlet temperature, inlet pressure, and flow rate, single-suction pump A typically will have the _____ impeller axial thrust and the _____ required net positive suction head.

A. greater; greater

B. greater; smaller

C. smaller; greater

D. smaller; smaller

ANSWER: A.

TOPIC: 291004
KNOWLEDGE: K1.13 [2.6/2.7]
QID: B6012

A single-stage (single impeller) centrifugal pump and a two-stage (two impellers) centrifugal pump have identical head-capacity curves. The pumps are connected to identical suction and discharge piping in a water system.

Compared to the single-stage pump, the two-stage pump produces the same flow rate at about _____ pump discharge head; and for the same flow rate, the two-stage pump requires _____ net positive suction head.

A. twice the; less

B. twice the; more

C. the same; less

D. the same; more

ANSWER: C.

TOPIC: 291004
KNOWLEDGE: K1.13 [2.6/2.7]
QID: B6712 (P6711)

A centrifugal pump is located adjacent to the bottom of an open water storage tank. The pump is taking suction from a river and discharging to the bottom of the tank. Initially the tank was empty and the pump was operating at point B on the drawing below.

When tank water level reaches 30 feet, the new pump operating point will be located on curve _____ closer to point _____. (Assume that no other changes occur in the system.)

A. 1; D

B. 2; A

C. 1; E

D. 2; C

ANSWER: B.

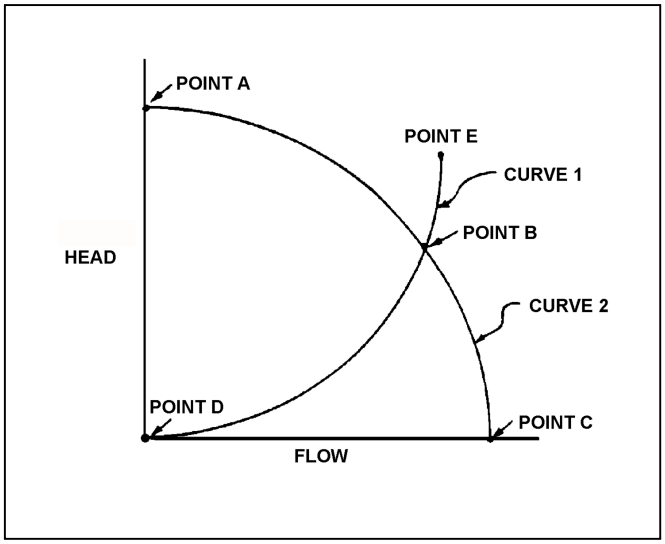

TOPIC: 291004
KNOWLEDGE: K1.13 [2.6/2.7]
QID: B7312 (P7310)

Refer to the drawing of centrifugal pump and system operating curves (see figure below).

Which one of the following describes the value of head where the two curves cross?

A. The maximum amount of head that the pump can provide.

B. The amount of pump head that is required to avoid cavitation.

C. The amount of pump head that is converted to kinetic energy in the pump.

D. The amount of pump head that is converted to heat and other losses as the water circulates through the system.

ANSWER: D.

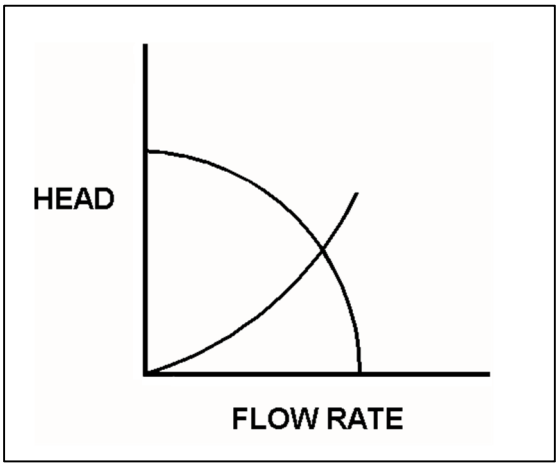

TOPIC: 291004
KNOWLEDGE: K1.13 [2.6/2.7]
QID: B7694 (P7694)

A centrifugal water pump is operating normally with the following parameters:

Inlet water pressure = 15 psia
Water temperature = 100°F
Pump head added = 100 feet

What is the pump discharge pressure?

A. 43 psia

B. 58 psia

C. 100 psia

D. 115 psia

ANSWER: B.

TOPIC: 291004
KNOWLEDGE: K1.13 [2.6/2.7]
QID: B7705

Given the following parameters for two independent centrifugal water pumps:

Pump A: Pump flow rate is 500 gpm at a water temperature of 70°F.
Pump B: Pump flow rate is 1000 gpm at a water temperature of 90°F.

If both pumps have the same discharge head, which pump has the lower discharge pressure, and why?

A. Pump A, due to the lower pump flow rate.

B. Pump A, due to the lower water temperature.

C. Pump B, due to the higher pump flow rate.

D. Pump B, due to the higher water temperature.

ANSWER: D.

TOPIC: 291004
KNOWLEDGE: K1.14 [2.5/2.5]
QID: B24

A single-speed centrifugal fire pump takes suction on a water storage tank and discharges through a flexible fire hose. Which one of the following describes the response of the pump discharge flow rate?

A. Decreases as the level in the storage tank decreases

B. Increases as the height of the fire hose nozzle is increased

C. Remains constant as the level in the storage tank decreases

D. Remains constant as the height of the fire hose nozzle is increased

ANSWER: A.

TOPIC: 291004
KNOWLEDGE: K1.14 [2.5/2.5]
QID: B623

A centrifugal pump is operating at rated conditions in an open system with all valves fully open. If the pump suction valve is throttled to 50 percent closed, pump suction pressure will _____; and pump flow rate will _____.

A. increase; decrease

B. decrease; remain the same

C. increase; remain the same

D. decrease; decrease

ANSWER: D.

TOPIC: 291004
KNOWLEDGE: K1.14 [2.5/2.5]
QID: B723 (P724)

A centrifugal pump is operating normally in an open system. If the pump recirculation valve is opened farther, pump discharge pressure will _____; and pump flow rate will _____.

A. increase; decrease

B. decrease; increase

C. increase; increase

D. decrease; decrease

ANSWER: B.

TOPIC: 291004
KNOWLEDGE: K1.14 [2.5/2.5]
QID: B1123 (P826)

If the fully open discharge valve of a reciprocating positive displacement pump is closed approximately 10 percent, pump flow rate will _____; and pump head will _____. (Assume "ideal" pump response.)

A. decrease; increase

B. remain constant; increase

C. decrease; remain constant

D. remain constant; remain constant

ANSWER: B.

TOPIC: 291004
KNOWLEDGE: K1.14 [2.5/2.5]
QID: B1421 (P1421)

A centrifugal pump is operating normally in an open system with all valves fully open. If the pump discharge valve is throttled to 50 percent, pump suction pressure will _____; and pump discharge pressure will _____.

A. increase; decrease

B. decrease; increase

C. increase; increase

D. decrease; decrease

ANSWER: C.

TOPIC: 291004
KNOWLEDGE: K1.14 [2.5/2.5]
QID: B2722 (P2722)

A centrifugal pump is operating at maximum design flow rate, taking suction on a vented water storage tank and discharging through two parallel valves. Valve A is fully open and valve B is half open.

Which one of the following will occur if valve B is fully closed?

A. The pump will operate at shutoff head.

B. The pump will operate at runout conditions.

C. The pump available net positive suction head will increase.

D. The pump required net positive suction head will increase.

ANSWER: C.

TOPIC: 291004
KNOWLEDGE: K1.14 [2.5/2.5]
QID: B2825 (P2224)

A motor-driven centrifugal pump is operating in an open system with its discharge valve throttled to 50 percent. How will the pump be affected if the discharge valve is fully opened?

A. Motor current decreases and total developed head decreases.

B. Available net positive suction head (NPSH) decreases, and pump differential pressure decreases.

C. Total developed head increases and available NPSH decreases.

D. The potential for pump cavitation decreases, and pump differential pressure decreases.

ANSWER: B.

TOPIC: 291004
KNOWLEDGE: K1.14 [2.5/2.5]
QID: B3623 (P3623)

A centrifugal firewater pump is operating to pressurize a fire main. The pump takes suction on a water reservoir. The reservoir water level and the eye of the pump impeller are both at sea level.

Given:

- The pump has a design shutoff head of 100 feet.
- The required net positive suction head (NPSH) for the pump is 15 feet.
- The reservoir water temperature is 60°F.
- A fire hose connected to the fire main is being used to suppress an elevated fire.

At which one of the following fire hose spray nozzle elevations (referenced to sea level) will the pump first be <u>unable</u> to provide flow? (Disregard head loss in the fire main and fire hose.)

A. 86 feet

B. 101 feet

C. 116 feet

D. 135 feet

ANSWER: B.

TOPIC: 291004
KNOWLEDGE: K1.14 [2.5/2.5]
QID: B3911 (P3912)

A centrifugal firewater pump is operating to pressurize a fire main. The pump takes suction from a water reservoir. A fire hose connected to the fire main is being used to suppress an elevated fire.

Given:

- The eye of the pump impeller is located 5 feet above the reservoir water level.
- The pump has a design shutoff head of 120 feet.
- The required net positive suction head (NPSH) for the pump is 15 feet.
- The reservoir water temperature is 60°F.

At which one of the following elevations above the eye of the pump impeller will the fire hose spray nozzle first be unable to provide flow? (Disregard all sources of head loss.)

A. 111 feet

B. 116 feet

C. 121 feet

D. 126 feet

ANSWER: B.

TOPIC: 291004
KNOWLEDGE: K1.14 [2.5/2.5]
QID: B4312 (P4313)

A centrifugal firewater pump is operating to pressurize a fire main. The pump takes suction from a vented water storage tank. A fire hose connected to the fire main is being used to suppress an elevated fire.

Given:

- The eye of the pump impeller is located 30 feet below the tank water level.
- The pump has a design shutoff head of 120 feet.
- The required net positive suction head (NPSH) for the pump is 15 feet.
- The tank water temperature is 60°F.

At which one of the following elevations above the eye of the pump impeller will the fire hose spray nozzle first be unable to provide flow? (Disregard all sources of head loss.)

A. 106 feet

B. 121 feet

C. 136 feet

D. 151 feet

ANSWER: D.

TOPIC: 291004
KNOWLEDGE: K1.14 [2.5/2.5]
QID: B4513 (P1423)

Which one of the following is at a relatively high value when a centrifugal pump is operating at shutoff head?

A. Pump motor current

B. Pump volumetric flow rate

C. Available net positive suction head

D. Required net positive suction head

ANSWER: C.

TOPIC: 291004
KNOWLEDGE: K1.14 [2.5/2.5]
QID: B4911 (P4912)

A centrifugal firewater pump is operating to pressurize a fire main. The pump takes suction from a water reservoir. A fire hose connected to the fire main is being used to suppress an elevated fire.

Given:

- The eye of the pump impeller is located 15 feet below the reservoir water level.
- The pump has a design shutoff head of 120 feet.
- The required net positive suction head (NPSH) for the pump is 15 feet.
- The reservoir water temperature is 60°F.

At which one of the following elevations above the reservoir water level will the fire hose spray nozzle first be unable to provide flow? (Disregard all sources of head loss.)

A. 91 feet

B. 106 feet

C. 121 feet

D. 136 feet

ANSWER: C.

TOPIC: 291004
KNOWLEDGE: K1.14 [2.5/2.5]
QID: B5412 (P5412)

A motor-driven centrifugal pump is operating in a closed-loop cooling water system and is unable to achieve its rated volumetric flow rate due to cavitation. Which one of the following will enable the pump to achieve a higher volumetric flow rate before cavitation occurs?

A. Operate the system at a higher pressure.

B. Operate the system at a higher temperature.

C. Remove the existing pump motor and install a motor with a higher horsepower rating.

D. Remove the existing pump and install a same-capacity pump with a higher minimum required net positive suction head rating.

ANSWER: A.

TOPIC: 291004
KNOWLEDGE: K1.14 [2.5/2.5]
QID: B5712 (P5712)

Refer to the graph that represents the head-capacity characteristics for a single-speed centrifugal cooling water pump (see figure below).

Which one of the following lists a pair of parameters that could be represented by curves A and B? (Note: NPSH is net positive suction head.)

	Curve A	Curve B
A.	Pump Head	Available NPSH
B.	Available NPSH	Required NPSH
C.	Required NPSH	System Head Loss
D.	System Head Loss	Pump Head

ANSWER: B.

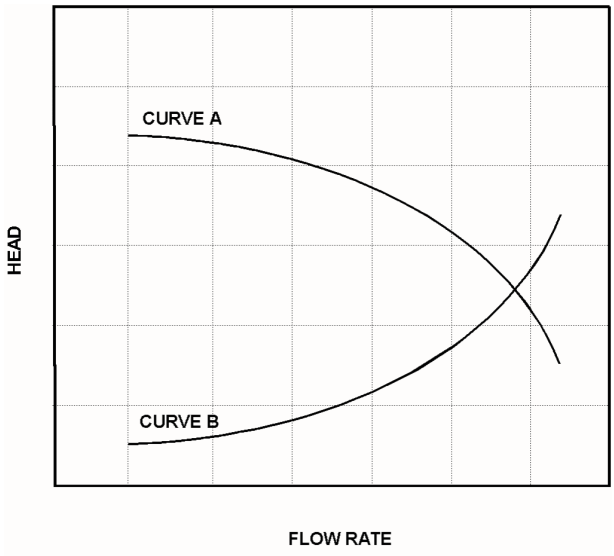

TOPIC: 291004
KNOWLEDGE: K1.14 [2.5/2.5]
QID: B6511 (P6512)

A motor-driven centrifugal pump is operating normally in a closed cooling water system. When the pump discharge flow control valve is opened further, the pump is unable to provide the desired volumetric flow rate due to cavitation. Which one of the following will enable a higher pump volumetric flow rate before cavitation occurs?

A. Remove the existing motor and install a motor with a lower horsepower rating.

B. Remove the existing motor and install a motor with a higher horsepower rating.

C. Remove the existing pump and install a same-capacity pump with a lower minimum net positive suction head requirement.

D. Remove the existing pump and install a same-capacity pump with a higher minimum net positive suction head requirement.

ANSWER: C.

TOPIC: 291004
KNOWLEDGE: K1.14 [2.5/2.5]
QID: B7012 (P7012)

Refer to the drawing of an operating cooling water system (see figure below).

The pump is unable to achieve its rated volumetric flow rate due to cavitation. Which one of the following will enable the pump to achieve a higher volumetric flow rate before cavitation occurs?

A. Decrease the service water flow rate.

B. Operate the system at a lower pressure.

C. Move the surge tank connection closer to the suction of the pump.

D. Remove the existing pump motor and install a motor with a higher horsepower rating.

ANSWER: C.

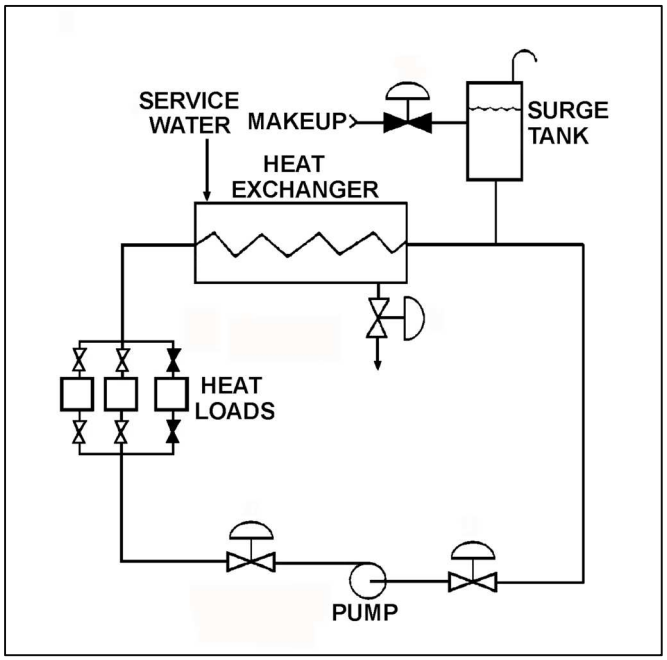

TOPIC: 291004
KNOWLEDGE: K1.14 [2.5/2.5]
QID: B7634 (P7634)

Refer to the drawing of an operating cooling water system (see figure below).

The pump is unable to achieve its rated volumetric flow rate due to cavitation. Which one of the following will enable the pump to achieve a higher volumetric flow rate before cavitation occurs?

A. Decrease the surge tank water level.

B. Increase the service water flow rate to the heat exchanger.

C. Move the surge tank connection closer to the discharge of the pump.

D. Remove the existing pump motor and install a motor with a higher horsepower rating.

ANSWER: B.

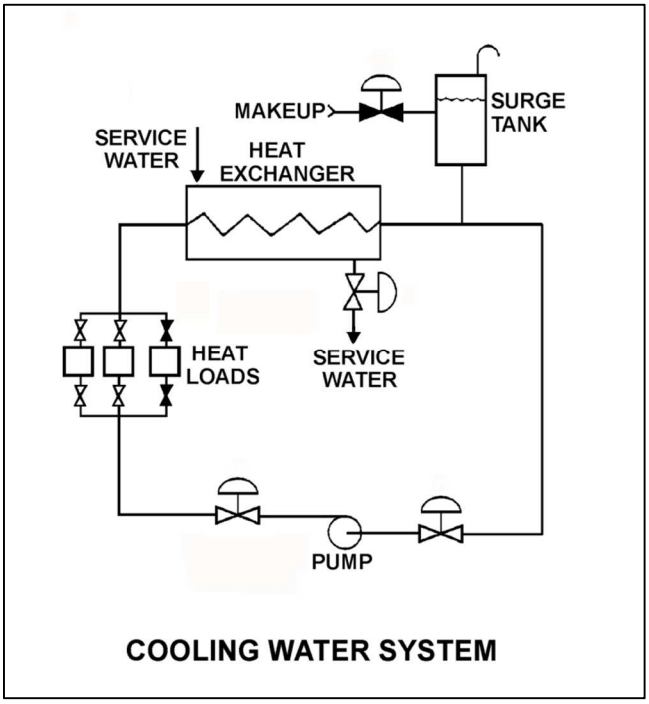

TOPIC: 291004
KNOWLEDGE: K1.14 [2.5/2.5]
QID: B7674 (P7674)

Refer to the drawing of an operating cooling water system (see figure below).

How will the centrifugal pump flow rate be affected if the surge tank level decreases from 8 feet to 4 feet? (Assume the pump maintains adequate net positive suction head.)

A. Pump flow rate will increase.

B. Pump flow rate will decrease.

C. Pump flow rate will remain the same.

D. Cannot be determined without additional information.

ANSWER: C.

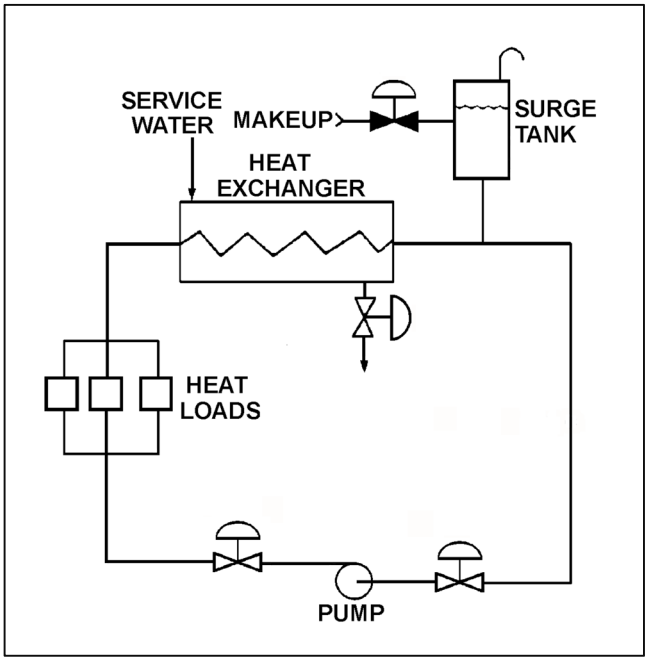

TOPIC: 291004
KNOWLEDGE: K1.15 [2.9/2.9]
QID: B624

A centrifugal pump is susceptible to overheating and possible cavitation while operating with its discharge valve closed, unless...

A. the pump is steam driven.

B. the suction valve is also closed.

C. pump seal cooling is provided.

D. minimum flow protection is provided.

ANSWER: D.

TOPIC: 291004
KNOWLEDGE: K1.15 [2.9/2.9]
QID: B1623

Which one of the following describes the primary purpose of minimum flow piping for a centrifugal pump?

A. Prevent pump runout during high flow conditions.

B. Prevent vortexing at the pump suction during high flow conditions.

C. Ensure adequate net positive suction head during low flow conditions.

D. Ensure adequate pump cooling during low flow conditions.

ANSWER: D.

TOPIC: 291004
KNOWLEDGE: K1.16 [2.5/2.7]
QID: B323 (P326)

A positive displacement pump (PDP) is operating in an open system. PDP parameters are as follows:

PDP speed	=	1,000 rpm
PDP discharge pressure	=	2,000 psig
PDP suction pressure	=	50 psig
PDP flow rate	=	150 gpm

Which one of the following changes will cause PDP flow rate to exceed 200 gpm?

A. A second identical discharge path is opened.

B. PDP speed is increased to 1,500 rpm.

C. PDP suction pressure is increased to 120 psig.

D. Downstream system pressure is decreased to 1,000 psig.

ANSWER: B.

TOPIC: 291004
KNOWLEDGE: K1.16 [2.5/2.7]
QID: B824

The volumetric flow rate of a positive displacement pump is directly proportional to the:

A. fluid density.

B. motor horsepower.

C. slip ratio.

D. pump speed.

ANSWER: D.

TOPIC: 291004
KNOWLEDGE: K1.16 [2.5/2.7]
QID: B1021 (P2223)

A centrifugal pump is operating in parallel with a positive displacement pump in an open water system. Each pump has the same maximum design pressure.

If pump discharge pressure increases to the maximum design pressure of each pump, the centrifugal pump will be operating at _____ flow; and the positive displacement pump will be operating near _____ flow.

A. minimum; minimum

B. minimum; maximum rated

C. maximum rated; minimum

D. maximum rated; maximum rated

ANSWER: B.

TOPIC: 291004
KNOWLEDGE: K1.16 [2.5/2.7]
QID: B1424

A positive displacement pump is operating at a constant speed in an open water system with its suction and discharge valves fully open. Which one of the following will increase if the pump discharge valve is throttled to 50 percent closed?

A. Proximity to cavitation

B. Required net positive suction head

C. Pump flow rate

D. Pump slip

ANSWER: D.

TOPIC: 291004
KNOWLEDGE: K1.16 [2.5/2.7]
QID: B1525 (P1526)

A positive displacement pump (PDP) is operating in an open water system. PDP parameters are as follows:

PDP speed	=	480 rpm
PDP discharge pressure	=	1,000 psig
PDP suction pressure	=	10 psig
PDP flow rate	=	60 gpm

Which one of the following changes will cause PDP flow rate to exceed 100 gpm?

A. A second identical discharge path is opened.

B. PDP speed is increased to 900 rpm.

C. PDP suction pressure is increased to 40 psig.

D. Downstream system pressure is decreased to 500 psig.

ANSWER: B.

TOPIC: 291004
KNOWLEDGE: K1.16 [2.5/2.7]
QID: B1824 (P2126)

A variable-speed positive displacement pump is operating at 100 rpm with a flow rate of 60 gpm in an open system. To decrease pump flow rate to 25 gpm, pump speed must be decreased to approximately...

A. 17 rpm.

B. 33 rpm.

C. 42 rpm.

D. 62 rpm.

ANSWER: C.

TOPIC: 291004
KNOWLEDGE: K1.16 [2.5/2.7]
QID: B1919 (P1726)

An ideal (no slip) reciprocating positive displacement pump is operating to provide makeup water to a reactor coolant system that is being maintained at 1,000 psig. The discharge valve of the pump was found to be throttled to 80 percent open.

If the valve is subsequently fully opened, pump flow rate will _____; and pump head will _____.

A. increase; decrease

B. remain constant; decrease

C. increase; remain constant

D. remain constant; remain constant

ANSWER: B.

TOPIC: 291004
KNOWLEDGE: K1.16 [2.5/2.7]
QID: B2525 (P2526)

Which one of the following will result in the greatest increase in volumetric flow rate to a system that is currently receiving flow from a positive displacement pump operating at 400 rpm with a discharge pressure of 100 psig?

A. Increase pump speed to 700 rpm.

B. Reduce system pressure to decrease pump discharge pressure to 40 psig.

C. Start a second identical positive displacement pump in series with the first.

D. Start a second identical positive displacement pump in parallel with the first.

ANSWER: D.

TOPIC: 291004
KNOWLEDGE: K1.16 [2.5/2.7]
QID: B2724 (P2726)

Which one of the following conditions will result in the greatest increase in volumetric flow rate from a positive displacement pump operating at 300 rpm and a discharge pressure of 100 psig?

A. Increasing pump speed to 700 rpm.

B. Decreasing pump discharge pressure to 30 psig.

C. Starting a second identical positive displacement pump in series with the first.

D. Starting a second identical positive displacement pump in parallel with the first.

ANSWER: A.

TOPIC: 291004
KNOWLEDGE: K1.16 [2.5/2.7]
QID: B2925 (P2926)

An ideal (no slip) reciprocating positive displacement pump is operating in an open system to provide makeup water to a coolant system that is being maintained at 800 psig. The discharge valve of the pump is full open.

If the pump discharge valve is subsequently throttled to 80 percent open, pump flow rate will _____; and pump head will _____.

A. decrease; increase

B. decrease; remain constant

C. remain constant; increase

D. remain constant; remain constant

ANSWER: C.

TOPIC: 291004
KNOWLEDGE: K1.16 [2.5/2.7]
QID: B3224 (P925)

A variable-speed positive displacement pump is operating at 100 rpm with a flow rate of 60 gpm in an open system. To decrease pump flow rate to 30 gpm, pump speed must be decreased to approximately...

A. 25 rpm.

B. 33 rpm.

C. 50 rpm.

D. 71 rpm.

ANSWER: C.

TOPIC: 291004
KNOWLEDGE: K1.16 [2.5/2.7]
QID: B3722 (P3730)

A rotary positive displacement pump (PDP) is being used to supply water to a piping system. The PDP is driven by an AC induction motor. The initial parameters are:

System pressure = 500 psig
PDP flow rate = 50 gpm
PDP motor current = 40 amps

After several hours, the PDP motor speed is increased such that the new PDP flow rate is 100 gpm. If system pressure does <u>not</u> change, what is the approximate value of the PDP motor current at the 100 gpm flow rate?

A. 80 amps

B. 160 amps

C. 320 amps

D. 640 amps

ANSWER: A.

TOPIC: 291004
KNOWLEDGE: K1.16 [2.5/2.7]
QID: B7675 (P7675)

Refer to the drawing of an operating curve for a positive displacement pump in a closed water system (see figure below).

Which one of the following describes the value of the head where the two curves cross?

A. The maximum amount of head that the pump can provide.

B. The amount of pump head that is required to avoid cavitation.

C. The amount of pump head that is converted to kinetic energy in the pump.

D. The amount of pump head that is converted to heat as the water circulates through the system.

ANSWER: D.

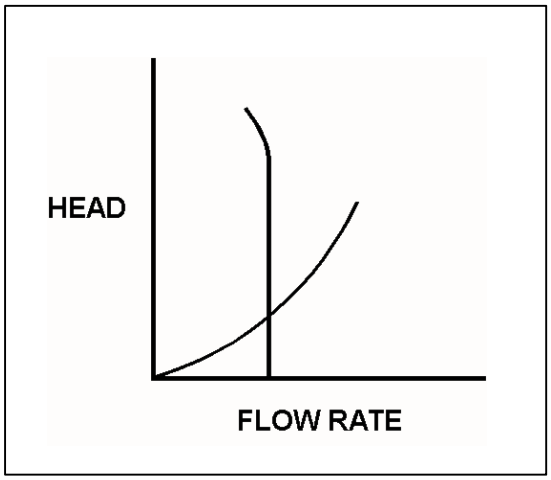

TOPIC: 291004
KNOWLEDGE: K1.17 [2.5/2.6]
QID: B324 (P322)

The available net positive suction head for a pump may be expressed as...

A. discharge pressure minus saturation pressure of the fluid being pumped.

B. discharge pressure minus suction pressure.

C. suction pressure minus saturation pressure of the fluid being pumped.

D. suction pressure plus discharge pressure.

ANSWER: C.

TOPIC: 291004
KNOWLEDGE: K1.17 [2.5/2.6]
QID: B825

Which one of the following will occur as a direct result of operating a positive displacement pump with insufficient net positive suction head?

A. Increased slip

B. Decreased pump speed

C. Increased flow rate

D. Vapor binding

ANSWER: D.

TOPIC: 291004
KNOWLEDGE: K1.17 [2.5/2.6]
QID: B6113 (P6139)

Water enters a positive displacement pump at 50 psig and 90°F. What is the available net positive suction head for the pump?

A. 80 feet

B. 114 feet

C. 133 feet

D. 148 feet

ANSWER: D.

TOPIC: 291004
KNOWLEDGE: K1.18 [3.3/3.3]
QID: B1125 (P1425)

Which one of the following describes the proper location for a relief valve that will be used to prevent exceeding the design pressure of a positive displacement pump and associated piping?

A. On the pump suction piping upstream of the suction isolation valve.

B. On the pump suction piping downstream of the suction isolation valve.

C. On the pump discharge piping upstream of the discharge isolation valve.

D. On the pump discharge piping downstream of the discharge isolation valve.

ANSWER: C.

TOPIC: 291004
KNOWLEDGE: K1.18 [3.3/3.3]
QID: B2425 (P626)

What is the purpose of the relief valve located between the pump outlet and the discharge isolation valve of many positive displacement pumps?

A. Protect the pump and suction piping from overpressure if the discharge valve is open during system startup.

B. Protect the pump and suction piping from overpressure if the suction valve is closed during pump operation.

C. Protect the pump and discharge piping from overpressure if the discharge valve is closed during pump operation.

D. Protect the pump and discharge piping from overpressure due to thermal expansion of pump contents when the pump is stopped with its suction valve closed.

ANSWER: C.

TOPIC: 291004
KNOWLEDGE: K1.19 [2.6/2.6]
QID: B1625

A pump that moves liquid by means of a piston within a cylinder that displaces a given volume of fluid for each stroke is a _____ pump.

A. centrifugal

B. screw

C. reciprocating

D. radial

ANSWER: C.

TOPIC: 291004
KNOWLEDGE: K1.19 [2.6/2.6]
QID: B2624 (P2626)

A section of pipe is being hydrostatically tested to 1,400 psig using a positive displacement pump. The operating characteristics of the positive displacement pump are shown in the drawing below.

Which one of the following could cause the observed difference between the expected and the actual pump performance?

A. Pump internal leakage is greater than expected.

B. Pipe section boundary valve leakage is greater than expected.

C. A relief valve on the pump discharge piping opened prior to its setpoint of 1,400 psig.

D. Available NPSH decreased more than expected, but remains slightly above required NPSH.

ANSWER: A.

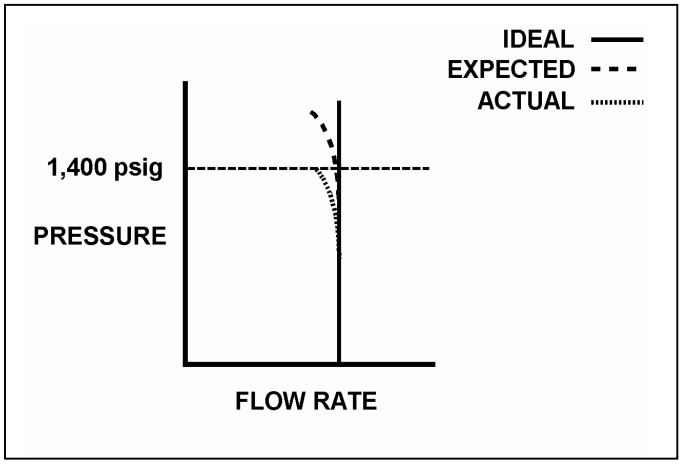

TOPIC: 291004
KNOWLEDGE: K1.19 [2.6/2.6]
QID: B3025 (P3024)

A pump is needed to supply fuel oil from a day tank to a diesel engine fuel injection system. The pump must maintain a nearly constant flow rate with a minimum of discharge pressure fluctuations as system pressure varies between 200 psig and 1,900 psig.

Which one of the following types of pumps would typically be used in this application?

A. Axial-flow centrifugal

B. Radial-flow centrifugal

C. Rotary positive displacement

D. Reciprocating positive displacement

ANSWER: C.

TOPIC: 291004
KNOWLEDGE: K1.19 [2.6/2.6}
QID: B5013 (P5012)

Use the following drawing of system and pump operating curves for a positive displacement pump with discharge relief valve protection to answer the following question.

A positive displacement pump is initially supplying water at 40 gpm with a pump discharge pressure of 400 psia. If pump speed is increased until pump flow rate is 80 gpm, what is the new pump discharge pressure?

A. 800 psia

B. 1,000 psia

C. 1,200 psia

D. 1,600 psia

ANSWER: B.

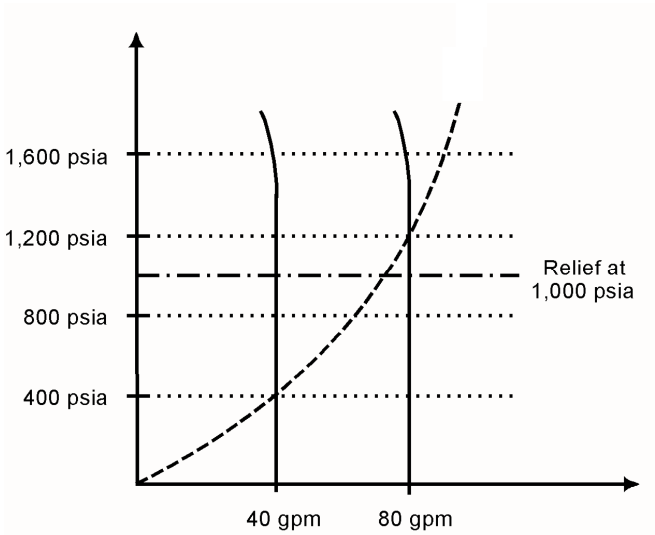

TOPIC: 291004
KNOWLEDGE: K1.19 [2.6/2.6}
QID: B5313 (P5313)

Use the following drawing of system and pump operating curves for an operating positive displacement pump with relief valve protection to answer the following question.

A positive displacement pump is initially supplying water at 40 gpm with a pump discharge pressure of 200 psia. If pump speed is increased until pump flow rate is 80 gpm, what is the new pump discharge pressure?

A. 400 psia

B. 800 psia

C. 1,000 psia

D. 1,600 psia

ANSWER: B.

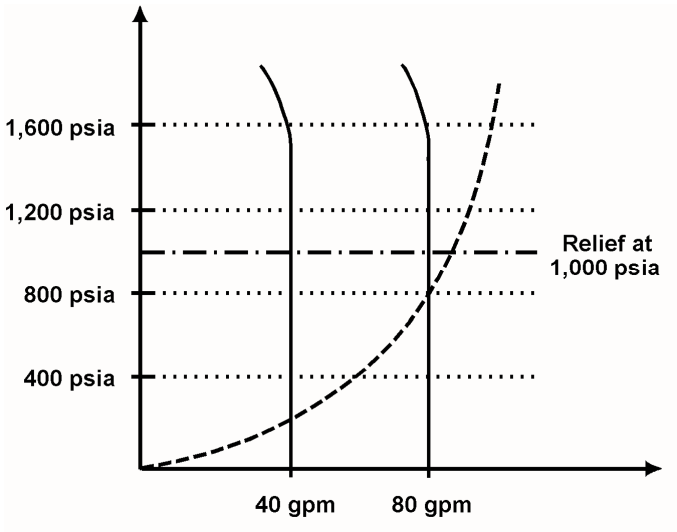

TOPIC: 291004
KNOWLEDGE: K1.20 [3.1/3.1]
QID: B117

Prior to starting a positive displacement pump, the discharge valve should be open to...

A. prevent rupturing the pump casing.

B. limit the pump motor starting time.

C. ensure the pump casing fills by backflow.

D. reduce pressure fluctuations in the discharge piping.

ANSWER: A.

TOPIC: 291004
KNOWLEDGE: K1.20 [3.1/3.1]
QID: B923

A _____ pump in a liquid system should be started with its discharge valve _____ to avoid rupturing the pump casing and/or discharge piping.

A. centrifugal; fully closed

B. centrifugal; fully open

C. positive displacement; fully closed

D. positive displacement; fully open

ANSWER: D.

TOPIC: 291004
KNOWLEDGE: K1.21 [3.1/3.0]
QID: B525 (P1923)

A positive displacement pump should be started with its suction valve _____ and its discharge valve _____.

A. closed; closed

B. closed; open

C. open; closed

D. open; open

ANSWER: D.

TOPIC: 291004
KNOWLEDGE: K1.21 [3.1/3.1]
QID: B1724 (P1722)

A positive displacement pump should be started with its suction valve _____ and its discharge valve _____.

A. throttled; throttled

B. throttled; fully open

C. fully open; throttled

D. fully open; fully open

ANSWER: D.

TOPIC: 291005
KNOWLEDGE: K1.01 [2.6/2.6]
QID: B229

If a locked rotor occurs on an operating motor-driven pump, motor amps will...

A. decrease due to the decreased pump flow rate.

B. decrease due to the decreased rotor speed.

C. increase due to the decreased pump flow rate.

D. increase due to the decreased rotor speed.

ANSWER: D.

TOPIC: 291005
KNOWLEDGE: K1.01 [2.6/2.6]
QID: B1326 (P2127)

A cooling water pump is being driven by an AC induction motor. Which one of the following describes how and why pump motor current will change if the pump shaft seizes?

A. Decreases due to decreased pump flow.

B. Decreases due to increased counter electromotive force.

C. Increases due to decreased pump flow.

D. Increases due to decreased counter electromotive force.

ANSWER: D.

TOPIC: 291005
KNOWLEDGE: K1.01 [2.6/2.6]
QID: B2626 (P1427)

A motor-driven cooling water pump is operating normally. How will pump motor current respond if the pump experiences a locked rotor?

A. Decreases immediately to zero due to breaker trip.

B. Decreases immediately to no-load motor amps.

C. Increases immediately to many times running current, then decreases to no-load motor amps.

D. Increases immediately to many times running current, then decreases to zero upon breaker trip.

ANSWER: D.

TOPIC: 291005
KNOWLEDGE: K1.01 [2.6/2.6]
QID: B2826 (P3127)

A motor-driven centrifugal pump exhibits indications of pump failure while being started in an idle cooling water system. Assuming the pump motor breaker does <u>not</u> trip, which one of the following pairs of indications would be observed if the failure is a locked pump shaft?

A. Lower than normal running current with zero system flow rate.

B. Lower than normal running current with a fraction of normal system flow rate.

C. Excessive duration of peak starting current with zero system flow rate.

D. Excessive duration of peak starting current with a fraction of normal system flow rate.

ANSWER: C.

TOPIC: 291005
KNOWLEDGE: K1.01 [2.6/2.6]
QID: B5914 (P5914)

When a motor-driven centrifugal pump was started, the motor ammeter reading immediately increased to, and stabilized at, many times the normal operating value. Which one of the following describes a possible cause for the ammeter response?

A. The pump was started with a fully closed discharge valve.

B. The pump was started with a fully open discharge valve.

C. The pump shaft seized upon start and did not rotate.

D. The pump shaft separated from the motor shaft upon start.

ANSWER: C.

TOPIC: 291005
KNOWLEDGE: K1.02 [2.6/2.7]
QID: B1126 (P1528)

Continuous operation of a motor at rated load with a loss of required cooling to the motor windings will eventually result in...

A. cavitation of the pumped fluid.

B. failure of the motor overcurrent protection devices.

C. breakdown of the motor insulation and electrical grounds.

D. phase current imbalance in the motor and overspeed trip actuation.

ANSWER: C.

TOPIC: 291005
KNOWLEDGE: K1.02 [2.6/2.7]
QID: B1526 (P1028)

Which one of the following will result from prolonged operation of an AC induction motor with excessively high stator temperatures?

A. Decreased electrical current demand due to reduced counter electromotive force.

B. Increased electrical current demand due to reduced counter electromotive force.

C. Decreased electrical resistance to ground due to breakdown of winding insulation.

D. Increased electrical resistance to ground due to breakdown of winding insulation.

ANSWER: C.

TOPIC: 291005
KNOWLEDGE: K1.02 [2.6/2.7]
QID: B1927 (P528)

Which one of the following will provide the initial motor protection against electrical damage caused by gradual bearing failure?

A. Thermal overload device

B. Overcurrent trip relay

C. Underfrequency relay

D. Undervoltage device

ANSWER: A.

TOPIC: 291005
KNOWLEDGE: K1.03 [2.6/2.7]
QID: B2228 (P1128)

An AC generator is supplying an isolated electrical system with a power factor of 1.0. If generator voltage is held constant while real load (KW) increases, the current supplied by the generator will increase in direct proportion to the _____ of the change in real load. (Assume the generator power factor remains constant at 1.0.)

A. cube

B. square

C. amount

D. square root

ANSWER: C.

TOPIC: 291005
KNOWLEDGE: K1.03 [2.6/2.7]
QID: B2327

A main generator that is connected to an infinite power grid has the following generator indications:

100 MW
0 MVAR
2,900 amps
20 KV

If MVAR does not change while real load is increased to 200 MW, the current supplied by the generator will increase to approximately...

A. 11,600 amps

B. 8,200 amps

C. 5,800 amps

D. 4,100 amps

ANSWER: C.

TOPIC: 291005
KNOWLEDGE: K1.03 [2.6/2.7]
QID: B3227 (P3229)

Refer to the partial drawing of two identical radial-flow centrifugal pumps in a cooling water system (see figure below).

The cooling water system is being returned to service following maintenance on the pumps. Each pump is driven by an identical three-phase AC induction motor.

Pump A was started five minutes ago to initiate flow in the cooling water system. Pump B is about to be started.

When pump B is started, which one of the following would cause the ammeter for pump B to remain off-scale high for several seconds longer than usual before stabilizing at a normal running current indication?

A. The pump packing was removed and not reinstalled.

B. The pump was initially rotating in the reverse direction.

C. Two phases of the motor windings were electrically switched.

D. The coupling between the motor and the pump was removed and not reinstalled.

ANSWER: B.

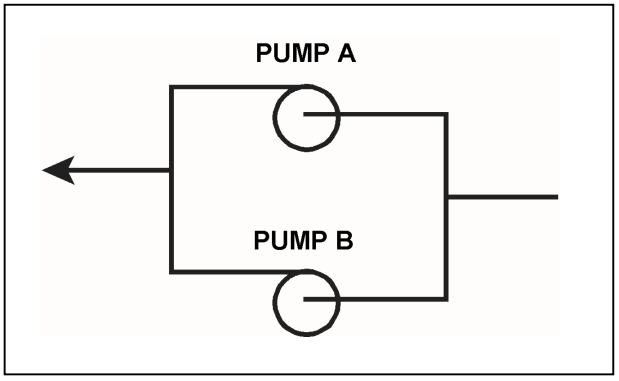

TOPIC: 291005
KNOWLEDGE: K1.03 [2.6/2.7]
QID: B4714 (P4714)

A nuclear power plant startup is in progress. The main generator has just been connected to the power grid with the following generator indications:

20 KV
288 amps
10 MW
0 MVAR

The operator suspects the main generator is operating under reverse power conditions and attempts to increase generator load (MW) normally. If the main generator is operating under reverse power conditions when the operator attempts to increase generator load, generator MW will initially _____; and generator amps will initially _____.

A. decrease; decrease

B. decrease; increase

C. increase; decrease

D. increase; increase

ANSWER: A.

TOPIC: 291005
KNOWLEDGE: K1.03 [2.6/2.7]
QID: B7615 (P7615)

A 4,000 KW diesel generator (DG) is supplying 2,000 KW to a 4.16 KV emergency bus. The DG governor is in the isochronous mode (no speed droop). The emergency bus is about to be synchronized with, and then connected to, an infinite offsite power grid by closing the emergency bus normal power feeder breaker.

The following stable emergency bus and normal power conditions currently exist:

Emergency Bus (from DG)	Normal Power (from Offsite)
4.16 KV	4.16 KV
60.0 Hz	60.1 Hz

When the emergency bus normal power feeder breaker is closed, the DG will… (Assume no additional operator action.)

A. transfer KW load to the offsite power grid but remain partially loaded.

B. transfer KW load to the offsite power grid until the DG is completely unloaded.

C. acquire KW load from the offsite power grid but remain within its KW load rating.

D. acquire KW load from the offsite power grid and ultimately exceed its KW load rating.

ANSWER: B.

TOPIC: 291005
KNOWLEDGE: K1.03 [2.6/2.7]
K1.04 [2.7/2.7]
QID: B7635 (P7635)

A radial flow centrifugal cooling water pump is being powered by a 480 VAC induction motor. If the motor input voltage slowly decreases from 480 VAC to 450 VAC, the pump flow rate will _____; and the motor current will _____. (Assume the motor does not stall.)

A. decrease; increase

B. decrease; decrease

C. remain the same; increase

D. remain the same; decrease

ANSWER: A.

TOPIC: 291005
KNOWLEDGE: K1.03 [2.6/2.7]
QID: B7684 (P7684)

A main generator is connected to an infinite power grid with the following generator output parameters:

22 KV
60 Hertz
975 MW
200 MVAR (out)

Main generator stator winding temperature is abnormally high. Which one of the following contains a combination of manual adjustments to the main generator speed control and voltage regulator setpoints such that each adjustment will reduce the main generator stator winding temperature? (Assume power factor remains less than 1.0.)

	Speed Setpoint	Voltage Setpoint
A.	Increase	Increase
B.	Increase	Decrease
C.	Decrease	Increase
D.	Decrease	Decrease

ANSWER: D.

TOPIC: 291005
KNOWLEDGE: K1.03 [2.6/2.7]
QID: B7695 (P7695)

A 4,000 KW rated diesel generator (DG) is supplying 2,000 KW to a 4.16 KV emergency bus. The DG governor is in the isochronous mode (no speed droop). The emergency bus is about to be synchronized with, and then connected to, an infinite offsite power grid by closing the emergency bus normal power feeder breaker.

The following stable emergency bus and normal power conditions currently exist:

Emergency Bus (from DG)	Normal Power (from Offsite)
4.16 KV	4.16 KV
60.1 Hz	59.9 Hz

When the emergency bus normal power feeder breaker is closed, the DG will… (Assume no additional operator action is taken.)

A. transfer KW load to the offsite power grid, but remain partially loaded.

B. transfer KW load to the offsite power grid until the DG is completely unloaded.

C. acquire KW load from the offsite power grid, but remain within its KW load rating.

D. acquire KW load from the offsite power grid and ultimately exceed its KW load rating.

ANSWER: D.

TOPIC: 291005
KNOWLEDGE: K1.04 [2.7/2.7]
QID: B27

Given the following conditions for a variable-speed motor-driven centrifugal pump:

Flow rate = 2000 gpm
Motor current = 100 amps

If the flow rate is increased to 4000 gpm, which one of the following motor current values <u>most</u> <u>closely</u> approximates the actual value?

A. 200 amps

B. 400 amps

C. 800 amps

D. 1600 amps

ANSWER: C.

TOPIC: 291005
KNOWLEDGE: K1.04 [2.7/2.7]
QID: B227 (P228)

A motor-driven centrifugal pump is operating with a flow rate of 3,000 gpm and a current requirement of 200 amps. If the pump speed is reduced such that the flow rate is 2,000 gpm, what is the final current requirement at the new lower speed? (Assume a constant motor voltage.)

A. 59 amps

B. 89 amps

C. 133 amps

D. 150 amps

ANSWER: A.

TOPIC: 291005
KNOWLEDGE: K1.04 [2.7/2.7]
QID: B326 (P328)

A motor-driven centrifugal pump is operating with the following parameters:

Speed	=	1,800 rpm
Motor current	=	40 amps
Pump head	=	20 psi
Pump flow rate	=	400 gpm

What will be the approximate values of pump head and motor current if pump speed is increased to 2,000 rpm?

A. 22 psi, 44 amps

B. 25 psi, 49 amps

C. 22 psi, 49 amps

D. 25 psi, 55 amps

ANSWER: D.

TOPIC: 291005
KNOWLEDGE: K1.04 [2.7/2.7]
QID: B1228 (P3430)

A motor-driven centrifugal pump is operating at 600 rpm with the following parameters:

Motor current	=	100 amps
Pump head	=	50 psid
Pump flow rate	=	880 gpm

What will be the approximate value of pump head if pump speed is increased such that the motor draws 640 amps?

A. 93 psid

B. 126 psid

C. 173 psid

D. 320 psid

ANSWER: C.

TOPIC: 291005
KNOWLEDGE: K1.04 [2.7/2.7]
QID: B1626 (P3129)

A multi-speed motor-driven centrifugal pump is operating with the following parameters:

Motor current = 27 amps
Pump head = 50 psid
Pump flow rate = 880 gpm

Which one of the following will be the approximate new value of pump head if pump speed is increased such that the motor draws 64 amps?

A. 89 psid

B. 119 psid

C. 211 psid

D. 281 psid

ANSWER: A.

TOPIC: 291005
KNOWLEDGE: K1.04 [2.7/2.7]
QID: B2030 (P428)

A motor-driven centrifugal pump is operating at 600 rpm with the following parameters:

Motor current = 10 amps
Pump head = 50 psid
Pump flow rate = 200 gpm

What will be the new value of pump head if the pump speed is increased such that the current requirements are now 640 amps?

A. 400 psid

B. 600 psid

C. 800 psid

D. 1,200 psid

ANSWER: C.

TOPIC: 291005
KNOWLEDGE: K1.04 [2.7/2.7]
QID: B2126 (P1530)

A motor-driven centrifugal pump is operating with the following parameters:

Speed	=	1,200 rpm
Motor current	=	40 amps
Pump head	=	20 psid
Pump flow rate	=	400 gpm

What will be the approximate values of pump head and motor current if pump speed is increased to 1,600 rpm?

A. 25 psid, 55 amps

B. 25 psid, 95 amps

C. 36 psid, 55 amps

D. 36 psid, 95 amps

ANSWER: D.

TOPIC: 291005
KNOWLEDGE: K1.04 [2.7/2.7]
QID: B2229 (P2130)

A motor-driven centrifugal pump is operating at 600 rpm with the following parameters:

Motor current	=	100 amps
Pump head	=	50 psid
Pump flow rate	=	880 gpm

What will be the approximate value of pump head if pump speed is increased to 1,200 rpm?

A. 71 psid

B. 100 psid

C. 141 psid

D. 200 psid

ANSWER: D.

TOPIC: 291005
KNOWLEDGE: K1.04 [2.7/2.7]
QID: B2527 (P2529)

A multi-speed centrifugal pump is operating with a flow rate of 1,800 gpm at a speed of 3,600 rpm.

Which one of the following approximates the new flow rate if the pump speed is decreased to 2,400 rpm?

A. 900 gpm

B. 1,050 gpm

C. 1,200 gpm

D. 1,350 gpm

ANSWER: C.

TOPIC: 291005
KNOWLEDGE: K1.04 [2.7/2.7]
QID: B2627 (P1828)

A motor-driven centrifugal pump is operating with a flow rate of 3,000 gpm and a motor current of 150 amps. If the pump speed is reduced such that the flow rate is 2,000 gpm, what is the final motor current at the new lower speed?

A. 44 amps

B. 59 amps

C. 67 amps

D. 100 amps

ANSWER: A.

TOPIC: 291005
KNOWLEDGE: K1.04 [2.7/2.7]
QID: B3127 (P3130)

Which one of the following describes the relationship between the current drawn by an AC induction motor and the amount of heat generated in the motor windings?

A. Heat generation is directly proportional to the current.

B. Heat generation is proportional to the cube of the current.

C. Heat generation is proportional to the square of the current.

D. Heat generation is proportional to the square root of the current.

ANSWER: C.

TOPIC: 291005
KNOWLEDGE: K1.04 [2.7/2.7]
QID: B4515 (P4515)

Refer to the pump performance curves for a centrifugal cooling water pump (see figure below). The pump is being driven by a single-speed AC induction motor. Pump flow rate is being controlled by a throttled discharge flow control valve.

The following initial pump conditions exist:

Pump motor current = 50 amps
Pump flow rate = 400 gpm

What will be the approximate value of pump motor current if the flow control valve is repositioned such that pump flow rate is 800 gpm?

A. Less than 100 amps

B. 200 amps

C. 400 amps

D. More than 500 amps

ANSWER: A.

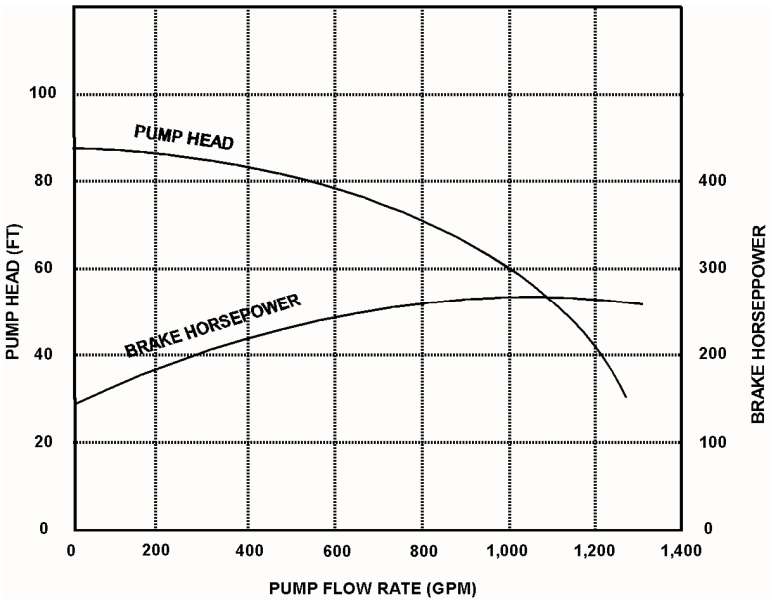

TOPIC: 291005
KNOWLEDGE: K1.04 [2.7/2.7]
QID: B4914 (P4915)

Consider two identical single-speed AC induction motors, one of which is connected to a radial-flow centrifugal pump and the other to a reciprocating-type positive displacement pump (PDP). Both pumps are taking suction at the same elevation from a vented water storage tank.

Each pump has a maximum design backpressure of 800 psig, and each is operating with the following initial conditions:

Flow rate = 200 gpm
Backpressure = 400 psig
Motor current = 100 amps

If the backpressure for each pump increases to 600 psig, the centrifugal pump will have a _____ flow rate than the PDP; and the centrifugal pump will have a _____ motor current than the PDP.

A. lower; higher

B. lower; lower

C. higher; higher

D. higher; lower

ANSWER: B.

TOPIC: 291005
KNOWLEDGE: K1.04 [2.7/2.7]
QID: B5814 (P5814)

Refer to the pump performance curves for a centrifugal cooling water pump (see figure below). The pump is being driven by a single-speed AC induction motor. Pump flow rate is being controlled by a throttled discharge flow control valve.

The following initial pump conditions exist:

Motor current = 100 amps
Pump flow rate = 800 gpm

What will be the approximate value of pump motor current if the flow control valve is repositioned such that pump flow rate decreases to 400 gpm?

A. Less than 15 amps

B. 25 amps

C. 50 amps

D. Greater than 75 amps

ANSWER: D.

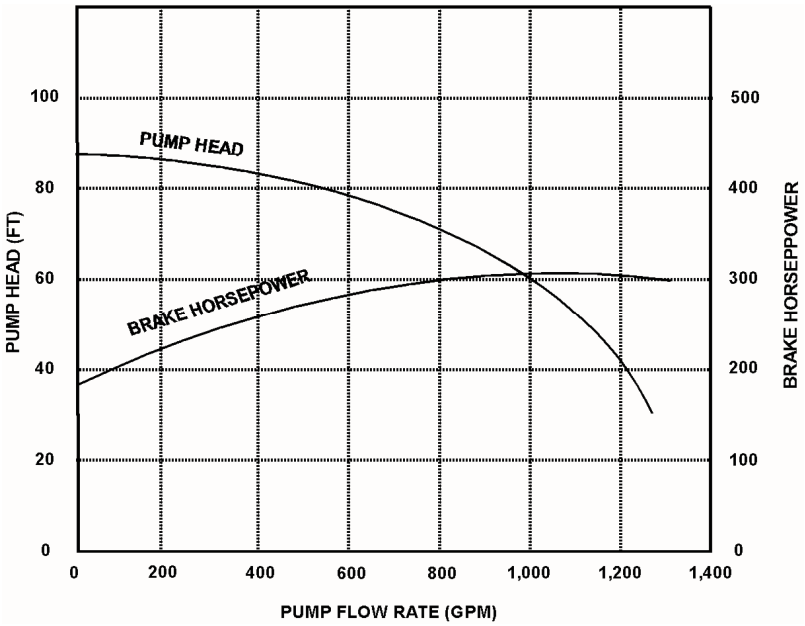

TOPIC: 291005
KNOWLEDGE: K1.04 [2.7/2.7]
QID: B6215 (P6215)

An AC induction motor is connected to a radial-flow centrifugal pump in a cooling water system. When the pump is started, the time period required to reach a stable running current will be shorter if the pump discharge valve is fully _____; and the stable running current will be lower if the pump discharge valve is fully _____.

A. open; open

B. open; closed

C. closed; open

D. closed; closed

ANSWER: D.

TOPIC: 291005
KNOWLEDGE: K1.04 [2.7/2.7]
QID: B6814 (P6814)

A centrifugal pump is driven by a single-speed AC induction motor. Pump flow rate is controlled by a throttled discharge flow control valve.

The following initial pump conditions exist:

Pump motor current = 50 amps
Pump flow rate = 400 gpm

What will the resulting pump motor current be if the flow control valve is repositioned such that pump flow rate increases to 800 gpm?

A. 100 amps

B. 200 amps

C. 400 amps

D. Cannot be determined without additional information.

ANSWER: D.

TOPIC: 291005
KNOWLEDGE: K1.04 [2.7/2.7]
QID: B7214 (P7214)

An axial flow ventilation fan is being driven by an AC motor. The fan is operating at its maximum rated flow rate. How will the fan motor current initially change if the flow rate through the fan is decreased by partially closing a discharge damper?

A. The motor current will increase in accordance with the centrifugal pump laws.

B. The motor current will increase, but not in accordance with the centrifugal pump laws.

C. The motor current will decrease in accordance with the centrifugal pump laws.

D. The motor current will decrease, but not in accordance with the centrifugal pump laws.

ANSWER: B

TOPIC: 291005
KNOWLEDGE: K1.04 [2.7/2.7]
QID: B7414 (P7414)

Consider two identical single-speed AC induction motors, one of which is connected to a radial-flow centrifugal pump and the other to a rotary-type positive displacement pump (PDP). Both pumps are taking suction from the bottom of a vented water storage tank.

Each pump is operating with the following initial conditions:

Flow rate = 200 gpm
Backpressure = 600 psig
Motor current = 100 amps

If the backpressure for each pump decreases to 400 psig, the centrifugal pump will have a _____ flow rate than the PDP; and the centrifugal pump will have a _____ motor current than the PDP.

A. lower; lower

B. lower; higher

C. higher; lower

D. higher; higher

ANSWER: D.

TOPIC: 291005
KNOWLEDGE: K1.04 [2.7/2.7]
QID: B7605 (P7605)

Refer to the pump performance curves for a centrifugal cooling water pump (see figure below). The pump is being driven by a single-speed AC induction motor. Pump flow rate is being controlled by a throttled discharge flow control valve.

The following initial pump conditions exist:

Motor current = 10 amps
Pump flow rate = 200 gpm

What will be the approximate value of pump motor current if the flow control valve is repositioned such that pump flow rate increases to 800 gpm?

A. 15 amps

B. 40 amps

C. 160 amps

D. Greater than 200 amps

ANSWER: A.

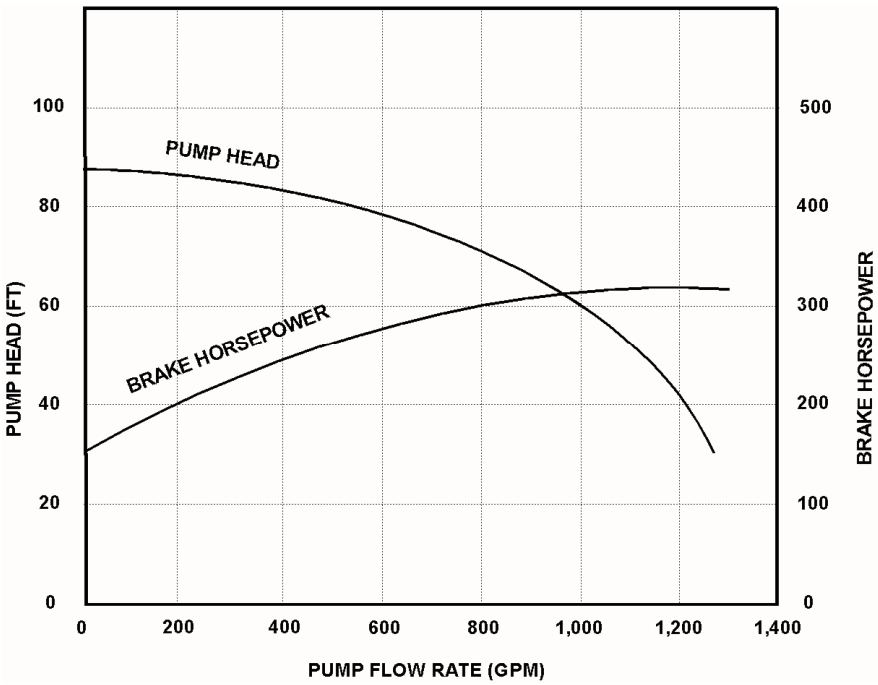

TOPIC: 291005
KNOWLEDGE: K1.04 [2.7/2.7]
QID: B7655 (P7655)

A motor-driven radial-flow centrifugal pump is operating to provide makeup water from a constant head source to a vented storage tank that is 30 feet tall. The pump is located at the base of the tank and discharges directly into the bottom of the tank. As the tank water level increases from 20 to 25 feet, the pump discharge pressure will _____; and the pump motor current will _____.

A. decrease; decrease

B. decrease; increase

C. increase; decrease

D. increase; increase

ANSWER: C.

TOPIC: 291005
KNOWLEDGE: K1.04 [2.7/2.7]
QID: B7665 (P7665)

An air-cooled AC induction motor is initially operating at steady-state conditions, producing a work output of 50 hp. A reduction in cooling air flow rate to the motor causes the average stator winding temperature to increase by 20ºF. To maintain a 50 hp work output at the higher stator winding temperature, the voltage applied to the motor must be _____ because the stator winding resistance has _____.

A. increased; increased

B. increased; decreased

C. decreased; increased

D. decreased; decreased

ANSWER: A.

TOPIC: 291005
KNOWLEDGE: K1.04 [2.7/2.7]
QID: B7696 (P7696)

The rate of heat production in the stator windings of an AC induction motor is _____ proportional to the _____ of the stator current.

A. directly, square

B. directly; amount

C. inversely; square

D. inversely; amount

ANSWER: A.

TOPIC: 291005
KNOWLEDGE: K1.04 [2.7/2.7]
QID: B7706 (P7706)

An axial flow ventilation fan is being driven by an AC motor. The fan is operating at 90 percent of rated flow with its discharge damper partially closed. How will the fan motor current change if its discharge damper is fully opened?

A. The motor current will increase in accordance with the centrifugal pump laws.

B. The motor current will increase, but not in accordance with the centrifugal pump laws.

C. The motor current will decrease in accordance with the centrifugal pump laws.

D. The motor current will decrease, but not in accordance with the centrifugal pump laws.

ANSWER: D.

TOPIC: 291005
KNOWLEDGE: K1.05 [2.6/2.7]
QID: B28 (P2229)

Which one of the following describes the motor current indications that would be observed during the start of a large motor-driven radial-flow centrifugal pump with a closed discharge valve?

A. Current immediately increases to the full-load value and then gradually decreases to the no-load value over several minutes.

B. Current immediately increases to the no-load value and then stabilizes.

C. Current immediately increases to many times the no-load value and then rapidly decreases to the no-load value after several seconds.

D. Current immediately increases to many times the no-load value and then gradually decreases to the no-load value after several minutes.

ANSWER: C.

TOPIC: 291005
KNOWLEDGE: K1.05 [2.6/2.7]
QID: B105 (P108)

The average starting current for a typical AC induction motor is approximately...

A. ten to fifteen times its normal running current.

B. five to seven times its normal running current.

C. two to three times its normal running current.

D. the same as its normal running current.

ANSWER: B.

TOPIC: 291005
KNOWLEDGE: K1.05 [2.6/2.7]
QID: B1227

Which one of the following AC induction motor events is characterized by maximum rotor slip and a motor current five to six times full-load current?

A. Starting of the motor

B. Ground in motor windings

C. Motor overloaded by 50 percent

D. Motor operating at breakdown torque

ANSWER: A.

TOPIC: 291005
KNOWLEDGE: K1.05 [2.6/2.7]
QID: B1327 (P1827)

Which one of the following describes the motor current during the start of a typical motor-driven radial-flow centrifugal pump with a closed discharge valve?

A. Current immediately increases to the full-load value and then gradually decreases to the no-load value.

B. Current immediately increases to the full-load value and then stabilizes at the full-load value.

C. Current immediately increases to many times the full-load value and then rapidly decreases to the no-load value after several seconds and then stabilizes.

D. Current immediately increases to many times the full-load value and then rapidly decreases to the full-load value after several seconds and then stabilizes.

ANSWER: C.

TOPIC: 291005
KNOWLEDGE: K1.05 [2.6/2.7]
QID: B2127 (P29)

The starting current in a typical AC induction motor is typically much higher than the full-load running current because...

A. starting torque is lower than full-load running torque.

B. starting torque is higher than full-load running torque.

C. rotor speed during start is too low to generate significant counter electromotive force in the stator.

D. rotor current during start is too low to generate significant counter electromotive force in the stator.

ANSWER: C.

TOPIC: 291005
KNOWLEDGE: K1.05 [2.6/2.7]
QID: B2227 (P2230)

Two identical AC induction motors are connected to identical radial-flow centrifugal pumps being used to provide cooling water flow in separate systems in a nuclear power plant. Each motor is rated at 1,000 hp. The discharge valve for pump A is fully open and the discharge valve for pump B is fully shut. Each pump is currently off.

If the pumps are started under these conditions, the longer time period required to stabilize motor current will be experienced by the motor for pump _____; and the higher stable motor current will be experienced by the motor for pump _____.

A. A; A

B. A; B

C. B; A

D. B; B

ANSWER: A.

TOPIC: 291005
KNOWLEDGE: K1.05 [2.6/2.7]
QID: B2428 (P2430)

Which one of the following describes when the highest stator current will be experienced by an AC induction motor?

A. During motor operation at full load.

B. During motor operation at zero load.

C. Immediately after energizing the motor.

D. Immediately after deenergizing the motor.

ANSWER: C.

TOPIC: 291005
KNOWLEDGE: K1.05 [2.6/2.7]
QID: B2528 (P2531)

Frequent starts of large motors will result in overheating of the motor windings due to high current flow caused by...

A. low electrical resistance of the motor windings.

B. an electrical short circuit between the rotor and stator.

C. high counter electromotive force at low rotor speeds.

D. windage losses between the rotor and stator.

ANSWER: A.

TOPIC: 291005
KNOWLEDGE: K1.05 [2.6/2.7]
QID: B2727 (P2730)

Two identical AC induction motors are connected to identical radial-flow centrifugal pumps in identical but separate cooling water systems. Each motor is rated at 200 hp. The discharge valve for pump A is fully shut and the discharge valve for pump B is fully open. Each pump is currently off.

If the pumps are started under these conditions, the longer time period required to stabilize motor current will be experienced by the motor for pump _____; and the higher stable motor current will be experienced by the motor for pump _____.

A. A; A

B. A; B

C. B; A

D. B; B

ANSWER: D.

TOPIC: 291005
KNOWLEDGE: K1.05 [2.6/2.7]
QID: B2928 (P930)

Which one of the following is a characteristic of a typical AC induction motor that causes starting current to be greater than running current?

A. The rotor magnetic field induces an opposing voltage in the stator that is proportional to rotor speed.

B. After the motor starts, resistors are added to the electrical circuit to limit the running current.

C. A large amount of starting current is required to initially establish the rotating magnetic field.

D. The rotor does not develop maximum induced current flow until it has achieved synchronous speed.

ANSWER: A.

TOPIC: 291005
KNOWLEDGE: K1.05 [2.6/2.7]
QID: B3529 (P2931)

Two identical AC induction motors are connected to identical radial-flow centrifugal pumps in identical but separate cooling water systems. Each motor is rated at 200 hp. The discharge valve for pump A is fully shut and the discharge valve for pump B is fully open. Each pump is currently off.

If the pumps are started under these conditions, the shorter time period required to reach a stable running current will be experienced by the motor for pump _____; and the higher stable running current will be experienced by the motor for pump _____.

A. A; A

B. A; B

C. B; A

D. B; B

ANSWER: B.

TOPIC: 291005
KNOWLEDGE: K1.05 [2.6/2.7]
QID: B4614 (P4615)

To minimize the adverse effects of starting current, an AC induction motor should be started _____ to _____ the stator counter electromotive force.

A. unloaded; quickly establish

B. unloaded; delay

C. partially loaded; quickly establish

D. partially loaded; delay

ANSWER: A.

TOPIC: 291005
KNOWLEDGE: K1.05 [2.6/2.7]
QID: B5714 (P5715)

Two identical AC induction motors are connected to identical radial-flow centrifugal pumps in identical but separate cooling water systems. Each motor is rated at 200 hp. The discharge valve for pump A is fully open and the discharge valve for pump B is fully closed. Each pump is currently off.

If the pumps are started under these conditions, the shorter time period required to reach a stable running current will be experienced by the motor for pump _____; and the higher stable running current will be experienced by the motor for pump _____.

A. A; A

B. A; B

C. B; A

D. B; B

ANSWER: C.

TOPIC: 291005
KNOWLEDGE: K1.06 [2.9/3.1]
QID: B26

For large electric motors, why must the number of starts during a specified period of time be limited?

A. To protect the power supply cables from insulation breakdown due to high starting current.

B. To protect the motor windings from overheating.

C. To prevent motor thrust bearing damage due to lack of lubrication.

D. To prevent rotor seizure due to thermal expansion of the windings.

ANSWER: B.

TOPIC: 291005
KNOWLEDGE: K1.06 [2.9/3.1]
QID: B228 (P2631)

Which one of the following is the primary reason for limiting the number of motor starts in a given time period?

A. Minimizes pitting of contacts in the motor breaker.

B. Prevents excessive torsional stresses on motor shaft.

C. Prevents overheating of motor windings.

D. Minimizes axial stresses on motor bearings.

ANSWER: C.

TOPIC: 291005
KNOWLEDGE: K1.06 [2.9/3.1]
QID: B328 (P231)

The frequency of starts for large AC motors should be limited to prevent excessive...

A. heat buildup within the motor.

B. wear of pump thrust bearings.

C. torsional stresses on the motor shaft.

D. arcing and degradation of motor breaker contacts.

ANSWER: A.

TOPIC: 291005
KNOWLEDGE: K1.06 [2.9/3.1]
QID: B928

Motor winding temperature will be reduced by...

A. increasing the reactive current flow in the stator windings.

B. limiting the number of motor starts allowed in a given time period.

C. decreasing the voltage supplied to the motor during full-load operation.

D. decreasing the number of stator poles during the start sequence.

ANSWER: B.

TOPIC: 291005
KNOWLEDGE: K1.06 [2.9/3.1]
QID: B1128 (P1131)

The frequency of start/stop cycles for an electrical motor is limited to prevent...

A. overheating the motor windings.

B. excessive shaft torsional stresses.

C. overheating the motor supply bus.

D. excessive cycling of the motor breaker.

ANSWER: A.

TOPIC: 291005
KNOWLEDGE: K1.06 [2.9/3.1]
QID: B1826 (P30)

What is the primary reason for limiting the number of starts for an electric motor in a given period of time?

A. Prevent overheating of the windings due to high starting currents.

B. Prevent overheating of the windings due to shorting within the stator.

C. Prevent rotor damage due to excessive cyclic stresses on the shaft.

D. Prevent rotor damage due to excessive axial displacement of the shaft.

ANSWER: A.

TOPIC: 291005
KNOWLEDGE: K1.06 [2.9/3.1]
QID: B1928 (P1031)

The number of starts for an electric motor in a given period of time should be limited because overheating of the _____ can occur due to the _____ counter electromotive force produced at low rotor speeds.

A. windings; high

B. windings; low

C. commutator and/or slip rings; high

D. commutator and/or slip rings; low

ANSWER: B.

TOPIC: 291005
KNOWLEDGE: K1.06 [2.9/3.1]
QID: B3327 (P3331)

A large centrifugal pump is driven by a 200 horsepower AC induction motor. The motor breaker control circuit contains the following protection devices: instantaneous overcurrent relay, motor thermal overload relay, control power fuses, and an anti-pumping device.

The pump had been manually started and stopped several times during a 5 minute period when the motor breaker tripped. Which one of the following is the most likely cause of the breaker trip?

A. Motor thermal overload.

B. Instantaneous overcurrent.

C. Blown control power fuse.

D. Anti-pumping device actuation.

ANSWER: A.

TOPIC: 291005
KNOWLEDGE: K1.07 [2.6/2.6]
QID: B528

What unit of measurement is used to describe the rate of electron flow?

A. Volt-amp reactive (VAR)

B. Ohm

C. Volt

D. Ampere

ANSWER: D.

TOPIC: 291005
KNOWLEDGE: K1.07 [2.6/2.6]
QID: B628

A difference in electrical potential is measured in...

A. amps.

B. volts.

C. ohms.

D. volt-amps reactive.

ANSWER: B.

TOPIC: 291005
KNOWLEDGE: K1.07 [2.6/2.6]
QID: B828

The force that causes electrons to flow in an electrical circuit is called...

A. power.

B. current.

C. voltage.

D. resistance.

ANSWER: C.

TOPIC: 291005
KNOWLEDGE: K1.07 [2.6/2.6]
QID: B929

What is the significance of a 0.8 power factor when describing the output of a generator?

A. 80 percent of the generator output is being converted to useful power.

B. 80 percent of the generator output is being used by reactive loads.

C. The generator is operating at 80 percent of its maximum rated output.

D. The generator is 80 percent efficient at converting mechanical power to electrical power.

ANSWER: A.

TOPIC: 291005
KNOWLEDGE: K1.07 [2.6/2.6]
QID: B1129

The term "volt" describes...

A. a rate of electron flow.

B. the resistance to current flow.

C. an electrical potential difference.

D. the transfer of circulating currents.

ANSWER: C.

TOPIC: 291005
KNOWLEDGE: K1.07
QID: B3328

A 125 VDC battery is rated at 768 amp-hours for a continuous 50 KW load. Approximately how long will the fully charged battery be able to supply a continuous 50 KW load before the battery rating is exceeded?

A. 115 minutes

B. 90 minutes

C. 75 minutes

D. 60 minutes

ANSWER: A.

TOPIC: 291005
KNOWLEDGE: K1.07 [2.6/2.6]
QID: B5515

A 125 VDC battery is rated at 600 amp-hours for a continuous 50 KW load. Approximately how long will the fully charged battery be able to supply a continuous 50 KW load before the battery rating is exceeded?

A. 115 minutes

B. 90 minutes

C. 75 minutes

D. 60 minutes

ANSWER: B.

TOPIC: 291005
KNOWLEDGE: K1.08 [2.5/2.6]
QID: B29

Which one of the following describes the effects of field current changes on generator excitation and power factor with the generator connected to an infinite power grid?

A. Increasing field current increases excitation and shifts power factor from lagging toward leading.

B. Increasing field current increases excitation and shifts power factor from leading toward lagging.

C. Decreasing field current increases excitation and shifts power factor from lagging toward leading.

D. Decreasing field current increases excitation and shifts power factor from leading toward lagging.

ANSWER: B.

TOPIC: 291005
KNOWLEDGE: K1.08 [2.5/2.6]
QID: B120 (P115)

A main generator that is connected to an infinite power grid has the following initial indications:

100 MW
0 MVAR
2,900 amps
20 KV

If main generator field current is <u>reduced</u> slightly, amps will _____; and MW will _____.

A. increase; decrease

B. decrease; decrease

C. increase; remain the same

D. decrease; remain the same

ANSWER: C.

TOPIC: 291005
KNOWLEDGE: K1.08 [2.5/2.6]
QID: B226 (P1928)

A main generator is connected to an infinite power grid. Which one of the following conditions will exist if the generator is operating underexcited?

A. Negative MVAR (VARs in) with a leading power factor

B. Positive MVAR (VARs out) with a leading power factor

C. Positive MVAR (VARs out) with a lagging power factor

D. Negative MVAR (VARs in) with a lagging power factor

ANSWER: A.

TOPIC: 291005
KNOWLEDGE: K1.08 [2.5/2.6]
QID: B428

A main generator is connected to an infinite power grid with VARs out (positive VARs). Increasing main generator excitation will cause main generator current to _____ and main generator VARs to _____.

A. increase; decrease

B. increase; increase

C. decrease; decrease

D. decrease; increase

ANSWER: B.

TOPIC: 291005
KNOWLEDGE: K1.08 [2.5/2.6]
QID: B529

A main generator that is connected to an infinite power grid has the following indications:

100 MW
100 MVAR (out)
2,800 amps

If main generator field current is reduced slightly, amps will _____; and MW will _____.

A. decrease; decrease

B. increase; decrease

C. decrease; remain the same

D. increase; remain the same

ANSWER: C.

TOPIC: 291005
KNOWLEDGE: K1.08 [2.5/2.6]
QID: B729

A main generator that is connected to an infinite power grid has the following indications:

100 MW
100 MVAR (out)
2,800 amps

If main generator field current is increased slightly, amps will _____; and MW will _____.

A. decrease; increase

B. increase; increase

C. decrease; remain the same

D. increase; remain the same

ANSWER: D.

TOPIC: 291005
KNOWLEDGE: K1.08 [2.5/2.6]
QID: B1030

A main generator is operating in parallel with an infinite power grid with generator VARs currently at zero. If generator field current increases, generator VARs will become _____; and generator power factor will become _____.

A. positive (VARs out); leading

B. negative (VARs in); leading

C. positive (VARs out); lagging

D. negative (VARs in); lagging

ANSWER: C.

TOPIC: 291005
KNOWLEDGE: K1.08 [2.5/2.6]
QID: B1229

A main generator is operating in parallel with an infinite power grid with generator VARs currently at zero. If generator field current is increased, the generator will become _____ and will attain a _____ power factor.

A. overexcited; leading

B. underexcited; lagging

C. underexcited; leading

D. overexcited; lagging

ANSWER: D.

TOPIC: 291005
KNOWLEDGE: K1.08 [2.5/2.6]
QID: B1532 (P2628)

A main generator that is connected to an infinite power grid has the following indications:

100 MW
0 MVAR
2,900 amps
20 KV

If main generator excitation is increased, amps will _____; and MW will _____.

A. remain the same; increase

B. remain the same; remain the same

C. increase; increase

D. increase; remain the same

ANSWER: D.

TOPIC: 291005
KNOWLEDGE: K1.08 [2.5/2.6]
QID: B1729 (P1728)

A main generator that is connected to an infinite power grid has the following indications:

600 MW
100 MVAR (in)
13,800 amps
25 KV

If main generator excitation current is decreased slightly, amps will _____; and MVAR will _____.

A. decrease; increase

B. increase; increase

C. decrease; decrease

D. increase; decrease

ANSWER: B.

TOPIC: 291005
KNOWLEDGE: K1.08 [2.5/2.6]
QID: B1830 (P1428)

A main generator that is connected to an infinite power grid has the following indications:

600 MW
100 MVAR (in)
13,800 amps
25 KV

If main generator excitation current is increased slightly, amps will initially _____; and MW will initially _____.

A. decrease; increase

B. increase; increase

C. decrease; remain the same

D. increase; remain the same

ANSWER: C.

TOPIC: 291005
KNOWLEDGE: K1.08 [2.5/2.6]
QID: B2028 (P2027)

A diesel generator (DG) is supplying both KW and KVAR to an electrical bus that is connected to an infinite power grid. Assuming DG and bus voltage do <u>not</u> change, if the DG voltage regulator setpoint is increased slightly, DG KW will _____; and DG amps will _____.

A. remain the same; increase

B. remain the same; remain the same

C. increase; increase

D. increase; remain the same

ANSWER: A.

TOPIC: 291005
KNOWLEDGE: K1.08 [2.5/2.6]
QID: B2128 (P928)

A main generator is operating in parallel with an infinite power grid. If the generator field current is slowly and continuously decreased, the generator will experience high current due to: (Assume no generator protective actuations occur.)

A. excessive generator MW.

B. excessive generator MVAR out.

C. excessive generator MVAR in.

D. generator reverse power.

ANSWER: C.

TOPIC: 291005
KNOWLEDGE: K1.08 [2.5/2.6]
QID: B2330 (P2328)

A main generator that is connected to an infinite power grid has the following indications:

600 MW
100 MVAR (out)
13,800 amps
25 KV

If main generator field current is decreased, amps will initially _____; and MVAR will initially _____.

A. decrease; increase

B. increase; increase

C. decrease; decrease

D. increase; decrease

ANSWER: C.

TOPIC: 291005
KNOWLEDGE: K1.08 [2.5/2.6]
QID: B2444 (P2439)

Two identical 1,000 MW generators are operating in parallel, supplying all the loads on an isolated electrical bus. The generator output breakers provide identical protection for the generators. Generator A and B output indications are as follows:

Generator A	Generator B
28 KV	28 KV
60 Hertz	60 Hertz
150 MW	100 MW
25 MVAR (out)	50 MVAR (out)

A malfunction causes the voltage regulator setpoint for generator B to slowly and continuously decrease. If no operator action is taken, the electrical current indication for generator B will...

A. initially decrease, and then increase until the output breaker for generator A trips on overcurrent.

B. initially decrease, and then increase until the output breaker for generator B trips on overcurrent.

C. decrease continuously until the output breaker for generator A trips on overcurrent.

D. decrease continuously until the output breaker for generator B trips on reverse power.

ANSWER: A.

TOPIC: 291005
KNOWLEDGE: K1.08 [2.5/2.6]
QID: B2530 (P2528)

A diesel generator (DG) is supplying both KW and KVAR to an electrical bus that is connected to an infinite power grid. Assuming bus voltage does not change, if the DG voltage regulator setpoint is decreased slightly, DG KW will _____; and DG amps will _____.

A. remain the same; decrease

B. remain the same; remain the same

C. decrease; decrease

D. decrease; remain the same

ANSWER: A.

TOPIC: 291005
KNOWLEDGE: K1.08 [2.5/2.6]
QID: B2543 (P2540)

Two identical 1,000 MW generators are operating in parallel supplying the same isolated electrical bus. The generator output breakers also provide identical protection for the generators. Generator A and B output indications are as follows:

Generator A	Generator B
22 KV	22 KV
60.2 Hertz	60.2 Hertz
200 MW	200 MW
25 MVAR (out)	50 MVAR (out)

A malfunction causes the voltage regulator setpoint for generator A to slowly and continuously increase. If no operator action is taken, generator B output current will...

A. initially decrease, and then increase until the output breaker for generator A trips on overcurrent.

B. initially decrease, and then increase until the output breaker for generator B trips on overcurrent.

C. increase continuously until the output breaker for generator A trips on overcurrent.

D. increase continuously until the output breaker for generator B trips on overcurrent.

ANSWER: A.

TOPIC: 291005
KNOWLEDGE: K1.08 [2.5/2.6]
QID: B2729 (P2728)

A main generator is supplying power to an infinite power grid. If the generator field current is slowly and continuously increased, the generator will experience high current due to: (Assume no generator protective actuations occur.)

A. generator reverse power.

B. excessive generator MW.

C. excessive generator MVAR in.

D. excessive generator MVAR out.

ANSWER: D

TOPIC: 291005
KNOWLEDGE: K1.08 [2.5/2.6]
QID: B3344 (P2041)

Two identical 1,000 MW generators are operating in parallel, supplying the same isolated electrical bus. The generator output breakers provide identical protection for the generators. Generator A and B output indications are as follows:

Generator A	Generator B
22.5 KV	22.5 KV
60.2 Hertz	60.2 Hertz
750 MW	750 MW
25 MVAR (out)	50 MVAR (out)

A malfunction causes the voltage regulator setpoint for generator B to slowly and continuously increase. If no operator action is taken, which one of the following describes the electrical current indications for generator A?

A. Current will decrease continuously until the output breaker for generator A trips on reverse power.

B. Current will decrease continuously until the output breaker for generator B trips on reverse power.

C. Current will initially decrease, and then increase until the output breaker for generator A trips on overcurrent.

D. Current will initially decrease, and then increase until the output breaker for generator B trips on overcurrent.

ANSWER: D.

TOPIC: 291005
KNOWLEDGE: K1.08 [2.5/2.6]
QID: B3543 (P2838)

Two identical 1,000 MW generators are operating in parallel supplying the same isolated electrical bus. The generator output breakers provide identical protection for the generators. Generator A and B output indications are as follows:

Generator A	Generator B
22 KV	22 KV
60.2 Hertz	60.2 Hertz
800 MW	800 MW
50 MVAR (out)	25 MVAR (in)

A malfunction causes the voltage regulator for generator B to slowly and continuously increase the terminal voltage for generator B. If no operator action is taken, generator B output current will...

A. increase continuously until the output breaker for generator A trips on overcurrent.

B. increase continuously until the output breaker for generator B trips on overcurrent.

C. initially decrease, and then increase until the output breaker for generator A trips on overcurrent.

D. initially decrease, and then increase until the output breaker for generator B trips on overcurrent.

ANSWER: D.

TOPIC: 291005
KNOWLEDGE: K1.08 [2.5/2.6]
QID: B3629 (P3629)

A main turbine-generator is operating in parallel with an infinite power grid. If the turbine control valves (or throttle valves) slowly fail open, the generator will experience high current primarily due to... (Assume no generator protective actuations occur.)

A. excessive generator MW.

B. excessive generator VARs out.

C. excessive generator VARs in.

D. generator reverse power.

ANSWER: A.

TOPIC: 291005
KNOWLEDGE: K1.08 [2.5/2.6]
K1.09 [2.3/2.6]
QID: B4115 (P4115)

A main generator is operating and connected to an infinite power grid. Elevated main generator winding temperature requires a reduction in reactive load from 200 MVAR (out) to 150 MVAR (out). To accomplish the reactive load reduction, the operator must _____ the generator field current; when generator reactive load equals 150 MVAR (out) the generator power factor will be _____ than the initial power factor.

A. increase; larger

B. increase; smaller

C. decrease; larger

D. decrease; smaller

ANSWER: C.

TOPIC: 291005
KNOWLEDGE: K1.08 [2.5/2.6]
K1.09 [2.3/2.6]
QID: B4315 (P6515)

A main generator is connected to an infinite power grid with the following generator output parameters:

22 KV
60 Hertz
575 MW
100 MVAR (out)

Which one of the following contains a combination of manual adjustments to the main generator voltage regulator and speed control setpoints such that each adjustment will result in main generator operation at a power factor closer to 1.0? (Assume the generator power factor remains less than 1.0.)

	Voltage Setpoint	Speed Setpoint
A.	Increase	Increase
B.	Increase	Decrease
C.	Decrease	Increase
D.	Decrease	Decrease

ANSWER: C.

TOPIC: 291005
KNOWLEDGE: K1.08 [2.5/2.6]
QID: B4615 (P4620)

Two identical 1,000 MW generators are operating in parallel supplying the same isolated electrical bus. The generator output breakers provide identical protection for the generators. Generator A and B output indications are as follows:

Generator A	Generator B
22 KV	22 KV
60.2 Hertz	60.2 Hertz
200 MW	200 MW
25 MVAR (out)	50 MVAR (out)

A malfunction causes the voltage regulator setpoint for generator B to slowly and continuously increase. If no operator action is taken, generator A output current will...

A. increase continuously until the output breaker for generator A trips on overcurrent.

B. decrease continuously until the output breaker for generator B trips on overcurrent.

C. initially decrease, and then increase until the output breaker for generator A trips on overcurrent.

D. initially decrease, and then increase until the output breaker for generator B trips on overcurrent.

ANSWER: D.

TOPIC: 291005
KNOWLEDGE: K1.08 [2.5/2.6]
K1.09 [2.3/2.6]
QID: B5015

A main generator is connected to an infinite power grid with the following generator output parameters:

22 KV
60 Hertz
600 MW
100 MVAR (in)

Which one of the following contains a combination of manual adjustments to the main generator voltage regulator and speed control setpoints such that each adjustment will result in main generator operation at a power factor closer to 1.0? (Assume the generator power factor remains less than 1.0.)

	Voltage Setpoint	Speed Setpoint
A.	Increase	Increase
B.	Increase	Decrease
C.	Decrease	Increase
D.	Decrease	Decrease

ANSWER: A.

TOPIC: 291005
KNOWLEDGE: K1.08 [2.5/2.6]
QID: B5415 (P5414)

A main generator is connected to an infinite power grid. Which one of the following pairs of main generator output parameters places the generator in the closest proximity to slipping a pole.

A. 800 MW; 200 MVAR (in)

B. 800 MW; 600 MVAR (in)

C. 400 MW; 200 MVAR (out)

D. 400 MW; 600 MVAR (out)

ANSWER: B.

TOPIC: 291005
KNOWLEDGE: K1.08 [2.5/2.6]
QID: B6014 (P6014)

During a surveillance test, a 4,000 KW diesel generator (DG) and a 1,000 MW main generator (MG) at a nuclear power plant are connected to the same power grid.

The following stable generator output conditions exist:

Diesel Generator	Main Generator
700 KW	800 MW
200 KVAR (out)	100 MVAR (out)

A malfunction then occurs, causing the voltage regulator for the MG to slowly and continuously increase the MG field current. If no operator action is taken, the DG output current will _____ until a breaker trip separates the generators.

A. remain about the same

B. increase continuously

C. initially increase, and then decrease

D. initially decrease, and then increase

ANSWER: D.

TOPIC: 291005
KNOWLEDGE: K1.08 [2.5/2.6]
K1.09 [2.3/2.6]
QID: B6115 (P6114)

A main generator is connected to an infinite power grid with the following generator output parameters:

22 KV
60 Hertz
575 MW
100 MVAR (in)

Which one of the following contains a combination of minor adjustments to the main generator voltage regulator and speed control setpoints such that each adjustment will cause the main generator to operate at a power factor closer to 1.0? (Assume the generator power factor remains less than 1.0.)

	Voltage Setpoint	Speed Setpoint
A.	Increase	Increase
B.	Increase	Decrease
C.	Decrease	Increase
D.	Decrease	Decrease

ANSWER: A.

TOPIC: 291005
KNOWLEDGE: K1.08 [2.5/2.6]
QID: B6314 (P6315)

A main turbine-generator is connected to an infinite power grid with the following generator output parameters:

25 KV
20,000 amps
830 MW
248 MVAR (out)

Which one of the following will significantly increase main generator output current <u>without</u> a significant change in main generator real load? (Assume the generator power factor remains less than 1.0.)

A. Increasing the main turbine speed control setpoint.

B. Increasing the main generator voltage regulator setpoint.

C. A 10 percent decrease in power grid electrical loads.

D. A 10 percent increase in power grid electrical loads.

ANSWER: B

TOPIC: 291005
KNOWLEDGE: K1.08 [2.5/2.6]
QID: B6615 (P6614)

During a surveillance test, a 4,000 KW diesel generator (DG) and a 1,000 MW main generator (MG) at a nuclear power plant are connected to a power grid.

The following stable generator output conditions initially exist:

Diesel Generator	Main Generator
700 KW	800 MW
200 KVAR (out)	100 MVAR (out)

A malfunction then occurs, causing the voltage regulator for the MG to slowly and continuously decrease the MG field current. If no operator action is taken, the DG output current will _____ until a breaker trip separates the generators.

A. increase continuously

B. decrease continuously

C. initially increase, and then decrease

D. initially decrease, and then increase

ANSWER: A.

TOPIC: 291005
KNOWLEDGE: K1.08 [2.5/2.6]
QID: B6915 (P6914)

A main generator is connected to an infinite power grid with the following generator output parameters:

100 MW
0 MVAR
2,625 amps
22 KV

If the main generator field current is decreased, main generator amps will initially _____; and MW will initially _____.

A. decrease; decrease

B. increase; decrease

C. decrease; remain the same

D. increase; remain the same

ANSWER: D.

TOPIC: 291005
KNOWLEDGE: K1.08 [2.5/2.6]
K1.09 [2.3/2.6]
QID: B7644 (P7644)

A main generator is connected to an infinite power grid with the following generator output parameters:

22 KV
60 Hertz
575 MW
100 MVAR (out)

Which one of the following contains a combination of minor adjustments to the main generator voltage regulator and speed control setpoints such that each adjustment will cause the main generator to operate at a power factor farther from 1.0? (Assume the generator power factor remains less than 1.0.)

	Voltage Setpoint	Speed Setpoint
A.	Increase	Increase
B.	Increase	Decrease
C.	Decrease	Increase
D.	Decrease	Decrease

ANSWER: B.

TOPIC: 291005
KNOWLEDGE: K1.09 [2.3/2.6]
QID: B329

A main generator is operating with the following output parameters:

24 KV
20,700 amps
800 MW
325 MVAR (in)

What is the power factor of the main generator?

A. 0.93 leading

B. 0.93 lagging

C. 0.81 leading

D. 0.81 lagging

ANSWER: A.

TOPIC: 291005
KNOWLEDGE: K1.09 [2.3/2.6]
QID: B630

A 4.16 KV diesel generator (DG) is loaded to 2,850 KW with a 0.85 power factor. What is the approximate KVAR load on the DG?

A. 503 KVAR

B. 1,766 KVAR

C. 2,850 KVAR

D. 3,353 KVAR

ANSWER: B.

TOPIC: 291005
KNOWLEDGE: K1.09 [2.3/2.6]
QID: B930

A 125 VDC motor is rated at 10 KW. What is the current rating for the motor?

A. 4.6 amps

B. 8.0 amps

C. 46.2 amps

D. 80.0 amps

ANSWER: D.

TOPIC: 291005
KNOWLEDGE: K1.09 [2.3/2.6]
QID: B1529 (P2228)

A diesel generator (DG) is supplying an electrical bus that is connected to an infinite power grid. Assuming DG terminal voltage and bus frequency do not change, if the DG governor setpoint is increased from 60 Hz to 60.1 Hz, DG KVAR will be _____; and DG amps will be _____.

A. the same; higher

B. the same; the same

C. higher; higher

D. higher; the same

ANSWER: A.

TOPIC: 291005
KNOWLEDGE: K1.09 [2.3/2.6]
QID: B2029 (P1128)

If the voltage supplied by an AC generator to an isolated electrical bus is held constant while loads (KW only) are added to the bus, the current supplied by the generator will increase in direct proportion to the _____ of the change in KW. (Assume power factor does not change.)

A. cube root

B. square root

C. amount

D. square

ANSWER: C.

TOPIC: 291005
KNOWLEDGE: K1.09 [2.3/2.6]
QID: B2929

Refer to the drawing of an electrical system power triangle (see figure below).

Which one of the following represents the power factor for this system?

A. A divided by B

B. A divided by C

C. B divided by A

D. B divided by C

ANSWER: D.

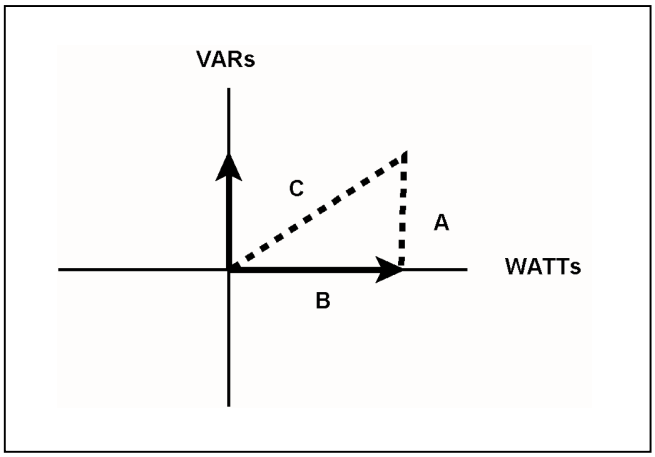

TOPIC: 291005
KNOWLEDGE: K1.09 [2.3/2.6]
QID: B3130 (P3142)

A nuclear power plant was initially operating at 80 percent power in the middle of a fuel cycle with the main generator connected to an infinite power grid with the following main generator output parameters:

60 Hz
25 KV
300 MVAR (out)
800 MW

A hydraulic oil system malfunction occurred that caused the main turbine steam inlet valves to slowly drift closed. After 10 minutes, the main generator real load decreased to 600 MW. Assuming no operator actions were taken, how were the remaining main generator output parameters affected after the above 10 minute period?

	Frequency (Hz)	Voltage (KV)	Reactive Load (MVAR)
A.	Decreased	Decreased	No change
B.	Decreased	No change	Decreased
C.	No change	No change	No change
D.	No change	Decreased	Decreased

ANSWER: C.

TOPIC: 291005
KNOWLEDGE: K1.09 [2.3/2.6]
QID: B4015

Refer to the drawing of an electrical system power curve (see figure below).

If the system is operating at point A, which one of the following is the power factor for this system?

A. 0.80

B. 0.88

C. 0.93

D. 0.97

ANSWER: D.

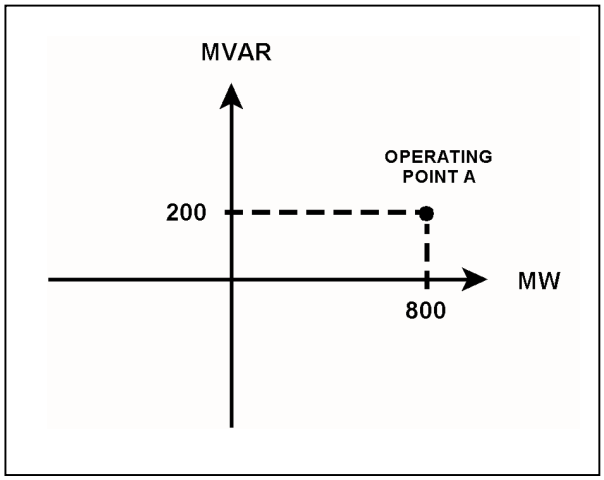

TOPIC: 291005
KNOWLEDGE: K1.09 [2.3/2.6]
QID: B4415

A main generator is supplying 300 MVAR to the power grid with a 0.85 power factor. What is the approximate MW load on the main generator?

A. 186 MW

B. 353 MW

C. 484 MW

D. 569 MW

ANSWER: C.

TOPIC: 291005
KNOWLEDGE: K1.09 [2.3/2.6]
QID: B4815 (P4814)

A main generator is connected to an infinite power grid with the following generator output parameters:

22 KV
60 Hertz
575 MW
100 MVAR (in)

Which one of the following contains a combination of manual adjustments to the main generator voltage regulator and speed control setpoints such that each adjustment will initially result in a decrease in main generator amps?

	Voltage Setpoint	Speed Setpoint
A.	Increase	Increase
B.	Increase	Decrease
C.	Decrease	Increase
D.	Decrease	Decrease

ANSWER: B.

TOPIC: 291005
KNOWLEDGE: K1.09 [2.3/2.6]
QID: B6415

A main generator has the following output parameters:

830 MW
25 KV
20,000 amps

What is the reactive power for this generator?

A. 36 MVAR

B. 143 MVAR

C. 247 MVAR

D. 330 MVAR

ANSWER: C.

TOPIC: 291005
KNOWLEDGE: K1.09 [2.3/2.6]
QID: B6515

A main generator is supplying 300 MVAR with a 0.90 power factor. What is the approximate MW load on the main generator?

A. 145 MW

B. 270 MW

C. 484 MW

D. 619 MW

ANSWER: D.

TOPIC: 291006
KNOWLEDGE: K1.01 [2.7/2.7]
QID: B104

Which one of the following describes the proper sequence for placing a steam (shell) and water (tube) heat exchanger into service?

A. The water side is valved in before the steam side to minimize thermal shock.

B. The water side is valved in before the steam side to ensure adequate venting.

C. The steam side is valved in before the water side to minimize scale buildup on the heat exchanger tubes.

D. The steam side is valved in before the water side to ensure that the cooldown rate does not exceed 100°F/hr.

ANSWER: A.

TOPIC: 291006
KNOWLEDGE: K1.02 [2.6/2.6]
QID: B36

Why is proper venting of a shell-and-tube heat exchanger important?

A. An air bubble reduces the heat transfer coefficient of the heat exchanger.

B. An air bubble causes pressure transients within the tubes as heat load changes.

C. An air bubble will cause thermal shock as it moves through the heat exchanger.

D. An air bubble will cause corrosion in the heat exchanger.

ANSWER: A.

TOPIC: 291006
KNOWLEDGE: K1.02 [2.6/2.6]
QID: B531

A liquid-to-liquid heat exchanger containing trapped air on the shell side will be less efficient because the air...

A. causes more turbulent fluid flow.

B. increases the differential temperature across the tubes.

C. reduces the fluid contact with the heat transfer surface.

D. causes pressure oscillations.

ANSWER: C.

TOPIC: 291006
KNOWLEDGE: K1.02 [2.6/2.6]
QID: B932

Reduced heat transfer performance in a water-to-water heat exchanger will result from...

A. tube wall thinning.

B. turbulent flow in the tubes.

C. increased ΔT between fluids.

D. gas collection in the shell.

ANSWER: D.

TOPIC: 291006
KNOWLEDGE: K1.03 [2.4/2.6]
QID: B631 (P1832)

The rate of heat transfer between two liquids in a heat exchanger will <u>increase</u> if the: (Assume single-phase conditions and a constant specific heat for each liquid.)

A. flow rate of the colder liquid decreases by 10 percent.

B. flow rate of the hotter liquid increases by 10 percent.

C. inlet temperatures of both liquids decrease by 20°F.

D. inlet temperatures of both liquids increase by 20°F.

ANSWER: B.

TOPIC: 291006
KNOWLEDGE: K1.03 [2.4/2.6]
QID: B832 (P1632)

The rate of heat transfer between two liquids in a single-phase heat exchanger will <u>decrease</u> if the... (Assume constant specific heat capacities.)

A. inlet temperatures of both liquids decrease by 20°F.

B. inlet temperatures of both liquids increase by 20°F.

C. flow rate of the colder liquid decreases by 10 percent.

D. flow rate of the hotter liquid increases by 10 percent.

ANSWER: C.

TOPIC: 291006
KNOWLEDGE: K1.03 [2.4/2.6]
QID: B1432 (P1432)

The rate of heat transfer between two liquids in a heat exchanger will increase if the… (Assume single-phase conditions and a constant specific heat for both liquids.)

A. inlet temperature of the hotter liquid decreases by 20°F.

B. inlet temperature of the colder liquid increases by 20°F.

C. flow rates of both liquids decrease by 10 percent.

D. flow rates of both liquids increase by 10 percent.

ANSWER: D.

TOPIC: 291006
KNOWLEDGE: K1.03 [2.4/2.6]
QID: B1732 (P1732)

Which one of the following will reduce the heat transfer rate between two liquids in a heat exchanger? (Assume single-phase conditions and a constant specific heat for both liquids.)

A. The inlet temperatures of both liquids decrease by 20°F.

B. The inlet temperatures of both liquids increase by 20°F.

C. The inlet temperature of the hotter liquid increases by 20°F.

D. The inlet temperature of the colder liquid increases by 20°F.

ANSWER: D.

TOPIC: 291006
KNOWLEDGE: K1.03 [2.4/2.6]
QID: B2531 (P2632)

The rate of heat transfer between two liquids in a heat exchanger will decrease if the: (Assume single-phase conditions and a constant specific heat for both liquids.)

A. inlet temperature of the hotter liquid increases by 20°F.

B. inlet temperature of the colder liquid decreases by 20°F.

C. flow rates of both liquids decrease by 10 percent.

D. flow rates of both liquids increase by 10 percent.

ANSWER: C.

TOPIC: 291006
KNOWLEDGE: K1.03 [2.4/2.6]
QID: B3631 (P3632)

Refer to the drawing of an operating water cleanup system (see figure below).

If cooling water flow rate is 1.0 x 10^6 lbm/hr, what is the approximate water flow rate in the cleanup system?

A. 2.2 x 10^5 lbm/hr

B. 3.2 x 10^5 lbm/hr

C. 2.2 x 10^6 lbm/hr

D. 3.2 x 10^6 lbm/hr

ANSWER: A.

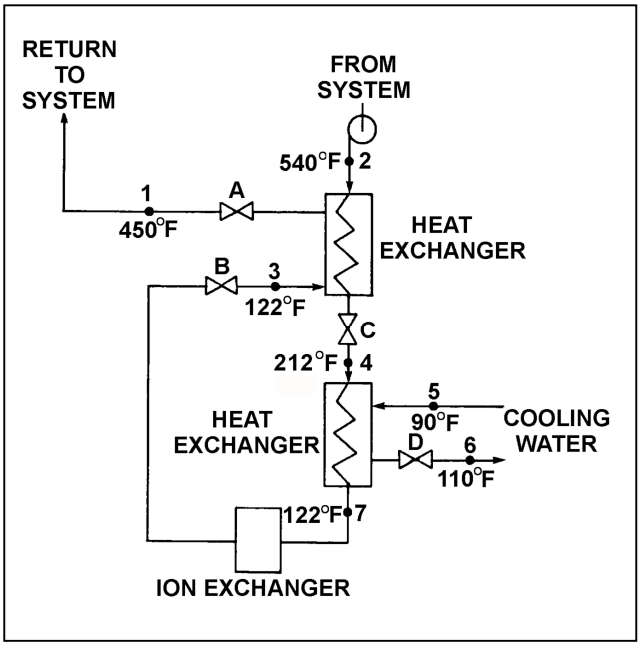

TOPIC: 291006
KNOWLEDGE: K1.03 [2.4/2.6]
QID: B7676 (P7676)

Which one of the following will increase the heat transfer rate between two liquids in a heat exchanger? (Assume single-phase conditions and a constant specific heat for both liquids.)

A. The mass flow rate of the hotter liquid decreases by 10 percent.

B. The mass flow rate of the colder liquid decreases by 10 percent.

C. The inlet temperature of the hotter liquid increases by 20°F.

D. The inlet temperature of the colder liquid increases by 20°F.

ANSWER: C.

TOPIC: 291006
KNOWLEDGE: K1.04 [2.8/2.8]
QID: B632 (P3232)

Refer to the drawing of an operating water cleanup system (see figure below).

Valves A, B, and D are fully open and valve C is 50 percent open. If valve C is opened to 100 percent, how will the temperatures at points 3 and 6 be affected?

	Point 3	Point 6
A.	Decrease	Decrease
B.	Decrease	Increase
C.	Increase	Decrease
D.	Increase	Increase

ANSWER: D.

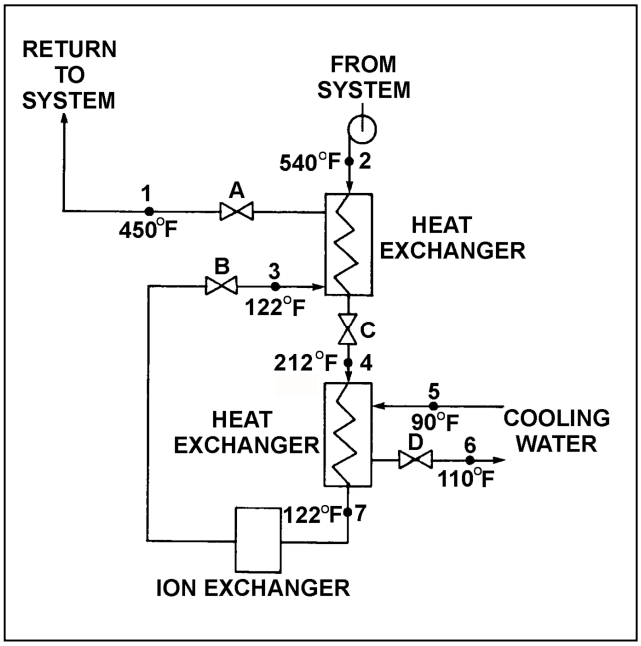

TOPIC: 291006
KNOWLEDGE: K1.04 [2.8/2.8]
QID: B1031 (P1032)

Refer to the drawing of an operating water cleanup system (see figure below).

Valves A, B, and C are fully open. Valve D is 20 percent open. If valve D is opened to 100 percent, the temperature at point...

A. 3 will increase.

B. 4 will decrease.

C. 5 will decrease.

D. 7 will increase.

ANSWER: B.

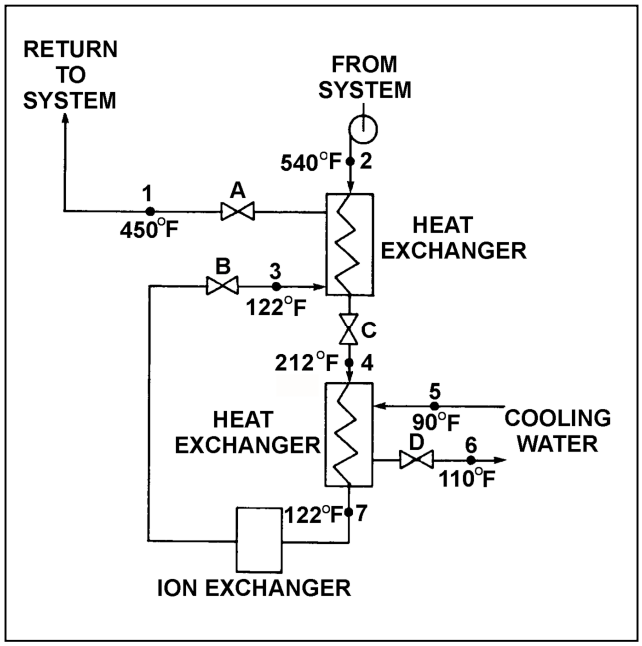

TOPIC: 291006
KNOWLEDGE: K1.04 [2.8/2.8]
QID: B1834 (P732)

Refer to the drawing of an operating water cleanup system (see figure below).

Valves A, B, and C are fully open. Valve D is 80 percent open. If valve D is throttled to 50 percent, the temperature at point...

A. 3 will decrease.

B. 4 will increase.

C. 5 will increase.

D. 6 will decrease.

ANSWER: B.

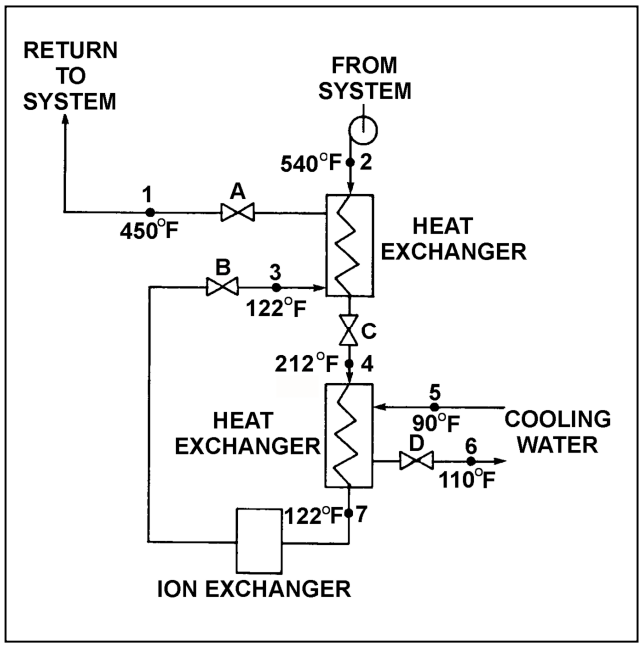

TOPIC: 291006
KNOWLEDGE: K1.04 [2.8/2.8]
QID: B1930 (P3332)

Refer to the drawing of an operating water cleanup system (see figure below). All valves are identical and are initially 50 percent open.

To raise the temperature at point 7, the operator can adjust valve _____ in the close direction.

A. A

B. B

C. C

D. D

ANSWER: D.

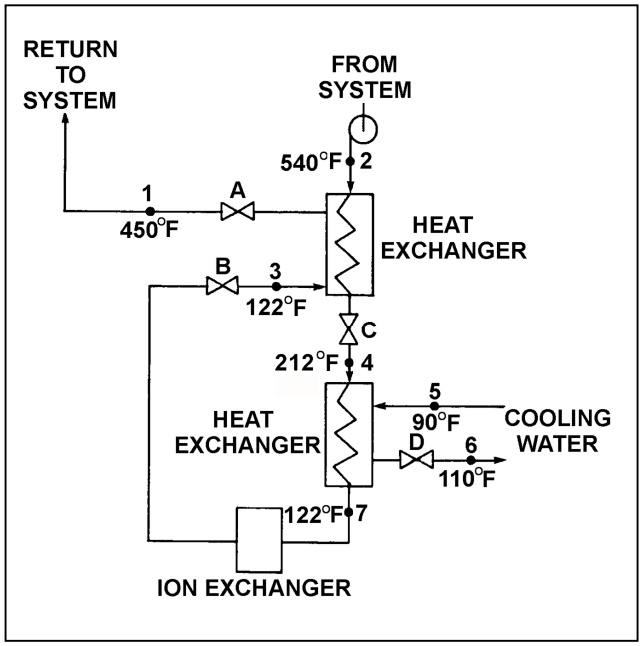

TOPIC: 291006
KNOWLEDGE: K1.04 [2.8/2.8]
QID: B6716

A reactor is shut down with core decay heat being removed by the residual heat removal (RHR) system. Assume that only the RHR heat exchangers are removing heat from the reactor vessel (RV), and that the RHR system provides complete thermal mixing of the RV.

Given the following information:

Reactor core rated thermal power	=	2,950 MW
Core decay heat rate	=	0.5% rated thermal power
RHR system heat removal rate	=	5.3×10^7 Btu/hr
RHR and RV coolant c_p	=	1.05 Btu/lbm-°F
Combined RV and RHR inventory	=	425,000 lbm

Which one of the following actions will establish a reactor cooldown rate between 20°F/hour and 30°F/hour?

A. Increase RHR heat exchanger flow rate to increase the cooldown rate by 10°F/hour.

B. Increase RHR heat exchanger flow rate to increase the cooldown rate by 20°F/hour.

C. Reduce RHR heat exchanger flow rate to decrease the cooldown rate by 10°F/hour.

D. Reduce RHR heat exchanger flow rate to decrease the cooldown rate by 20°F/hour.

ANSWER: B.

TOPIC: 291006
KNOWLEDGE: K1.04 [2.8/2.8]
QID: B7117

A nuclear power plant is shut down with core decay heat being removed by the residual heat removal (RHR) system. Assume that only the RHR heat exchangers are removing heat from the reactor vessel (RV), and that the RHR system provides complete thermal mixing in the RV.

Given the following information:

Reactor core rated thermal power	=	2,950 MW
Core decay heat rate	=	0.5% rated thermal power
RHR system heat removal rate	=	5.7×10^7 Btu/hr
RHR and RV coolant c_p	=	1.05 Btu/lbm-°F
Combined RV and RHR inventory	=	450,000 lbm

Which one of the following actions will establish a reactor cooldown rate between 20°F/hour and 30°F/hour?

A. Increase RHR heat exchanger flow rate to increase the cooldown rate by 10°F/hour.

B. Increase RHR heat exchanger flow rate to increase the cooldown rate by 20°F/hour.

C. Reduce RHR heat exchanger flow rate to decrease the cooldown rate by 10°F/hour.

D. Reduce RHR heat exchanger flow rate to decrease the cooldown rate by 20°F/hour.

ANSWER: A.

TOPIC: 291006
KNOWLEDGE: K1.04 [2.8/2.8]
QID: B7616

A nuclear power plant is shut down with core decay heat being removed by the residual heat removal (RHR) system. Assume that only the RHR heat exchangers are removing heat from the reactor vessel (RV), and that the RHR system provides complete thermal mixing in the RV.

Given the following information:

Reactor core rated thermal power	=	2,950 MW
Core decay heat rate	=	0.6% rated thermal power
RHR system heat removal rate	=	8.1×10^7 Btu/hr
RHR and RV coolant c_p	=	1.05 Btu/lbm-°F
Combined RV and RHR inventory	=	450,000 lbm

Which one of the following actions will establish a reactor cooldown rate between 20°F/hour and 30°F/hour?

A. Increase RHR heat exchanger flow rate to increase the cooldown rate by 10°F/hour.

B. Increase RHR heat exchanger flow rate to increase the cooldown rate by 20°F/hour.

C. Reduce RHR heat exchanger flow rate to decrease the cooldown rate by 10°F/hour.

D. Reduce RHR heat exchanger flow rate to decrease the cooldown rate by 20°F/hour.

ANSWER: D.

TOPIC: 291006
KNOWLEDGE: K1.07 [2.7/2.8]
QID: B31

Decreasing the temperature of the lube oil leaving a lube oil heat exchanger is normally accomplished by...

A. increasing the cooling water flow rate.

B. increasing the lube oil flow rate.

C. decreasing the cooling water flow rate.

D. decreasing the lube oil flow rate.

ANSWER: A.

TOPIC: 291006
KNOWLEDGE: K1.07 [2.9/3.0]
QID: B101

Refer to the drawing of an operating water cleanup system (see figure below).

All valves are identical and are initially 50 percent open. The temperature at point 3 is exceeding operating limits. To lower the temperature at point 3, the operator can adjust valve _____ in the open direction.

A. A

B. B

C. C

D. D

ANSWER: D.

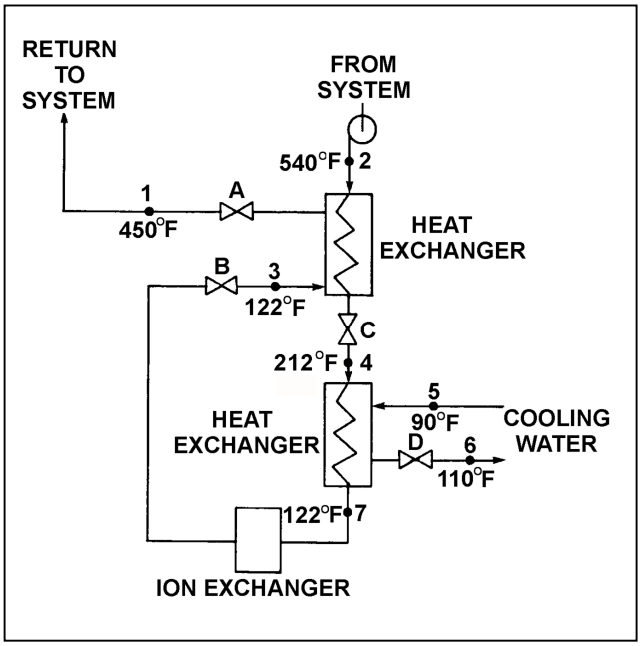

TOPIC: 291006
KNOWLEDGE: K1.07 [2.7/2.8]
QID: B231 (P104)

Refer to the drawing of an operating water cleanup system (see figure below).

All valves are identical and are initially 50 percent open. To lower the temperature at point 7, the operator can adjust valve _____ in the open direction.

A. A

B. B

C. C

D. D

ANSWER: D.

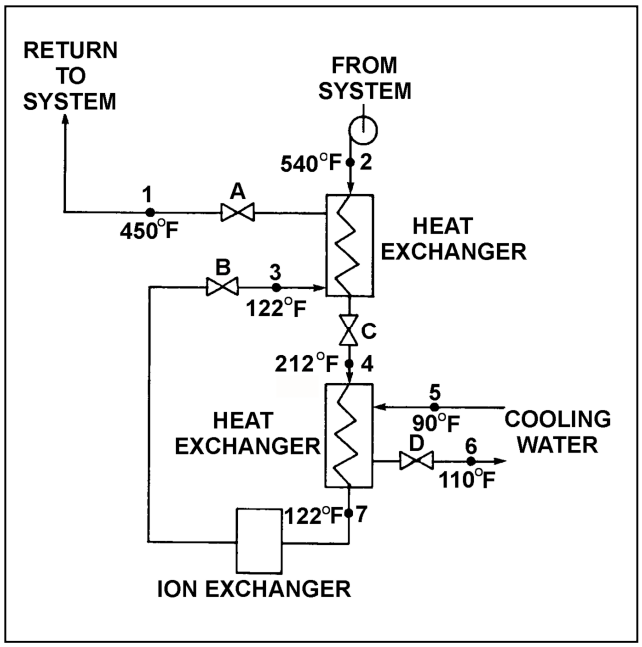

TOPIC: 291006
KNOWLEDGE: K1.07 [2.7/2.8]
QID: B1231 (P1231)

Refer to the drawing of an operating water cleanup system (see figure below).

All valves are identical and are initially 50 percent open. To lower the temperature at point 4, the operator can adjust valve _____ in the _____ direction.

A. A; open

B. B; shut

C. C; open

D. D; shut

ANSWER: B.

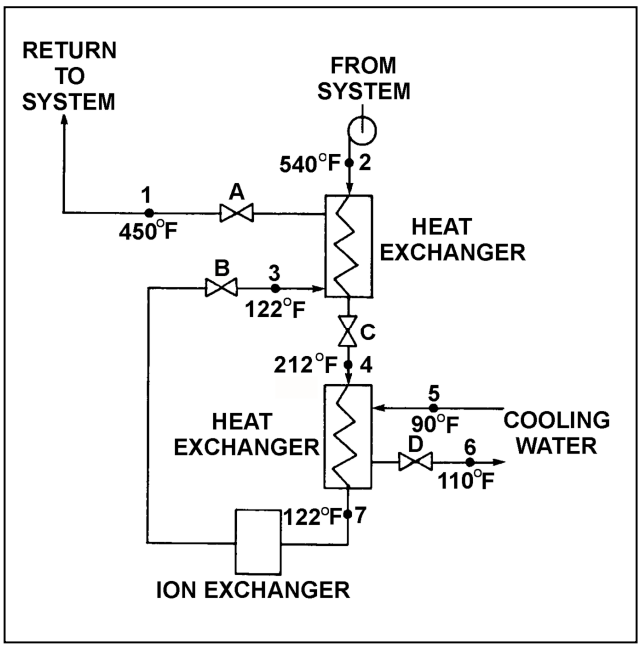

TOPIC: 291006
KNOWLEDGE: K1.07 [2.7/2.8]
QID: B2732 (P2732)

Refer to the drawing of an operating water cleanup system (see figure below).

All valves are identical and are initially 50 percent open. To raise the temperature at point 4, the operator can adjust valve _____ in the _____ direction.

A. A; shut

B. B; shut

C. C; open

D. D; open

ANSWER: C.

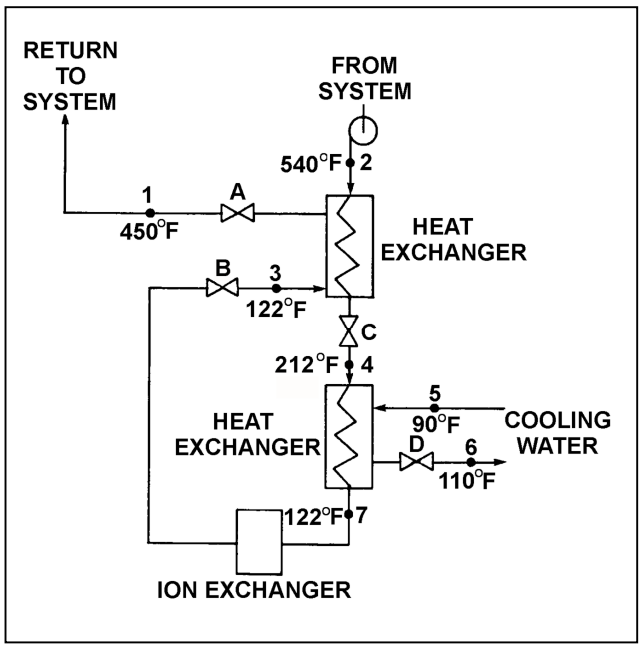

TOPIC: 291006
KNOWLEDGE: K1.07 [2.6/2.8]
QID: B3832 (P3833)

A main turbine-generator was operating at 80 percent load with the following initial steady-state lube oil and cooling water temperatures for the main turbine lube oil heat exchanger:

$T_{oil\ in}$ = 174°F
$T_{oil\ out}$ = 114°F
$T_{water\ in}$ = 85°F
$T_{water\ out}$ = 115°F

Six months later, the following current steady-state heat exchanger temperatures are observed:

$T_{oil\ in}$ = 177°F
$T_{oil\ out}$ = 111°F
$T_{water\ in}$ = 85°F
$T_{water\ out}$ = 115°F

Assume that the total heat exchanger heat transfer coefficient and the cooling water mass flow rate do not change, and that the specific heat values for the cooling water and lube oil do not change. Also assume that the lube oil system is a closed system.

Which one of the following could be responsible for the differences between the initial and current steady-state heat exchanger temperatures?

A. The current main turbine-generator load is lower than the initial load.

B. The current main turbine-generator load is higher than the initial load.

C. The current main turbine lube oil mass flow rate is less than the initial flow rate.

D. The current main turbine lube oil mass flow rate is greater than the initial flow rate.

ANSWER: C.

TOPIC: 291006
KNOWLEDGE: K1.07 [2.6/2.8]
QID: B5317 (P5316)

A main turbine-generator was operating at 80 percent load with the following initial steady-state lube oil and cooling water temperatures for the main turbine lube oil heat exchanger:

$T_{oil\ in}$ = 174°F
$T_{oil\ out}$ = 114°F
$T_{water\ in}$ = 85°F
$T_{water\ out}$ = 115°F

Six months later, the current steady-state heat exchanger temperatures are:

$T_{oil\ in}$ = 174°F
$T_{oil\ out}$ = 120°F
$T_{water\ in}$ = 85°F
$T_{water\ out}$ = 120°F

Assume that the lube oil mass flow rate does not change, and that the specific heat values for the cooling water and lube oil do not change. Also assume that the main turbine lube oil system is a closed system.

The differences between the initial and current steady-state heat exchanger temperatures could be caused by the current main turbine-generator load being _____ with the current heat exchanger cooling water mass flow rate being _____.

A. higher; lower

B. higher; higher

C. lower; lower

D. lower; higher

ANSWER: C.

TOPIC: 291006
KNOWLEDGE: K1.07 [2.7/2.8]
QID: B5716 (P5716)

Refer to the drawing of an operating parallel-flow lube oil heat exchanger (see figure below). Assume that lube oil (LO) inlet temperature is greater than cooling water (CW) inlet temperature.

Unlike a counter-flow heat exchanger, in a parallel-flow heat exchanger the _____ temperature can never be greater than the _____ temperature.

A. LO outlet; CW inlet

B. LO outlet; CW outlet

C. CW outlet; LO inlet

D. CW outlet; LO outlet

ANSWER: D.

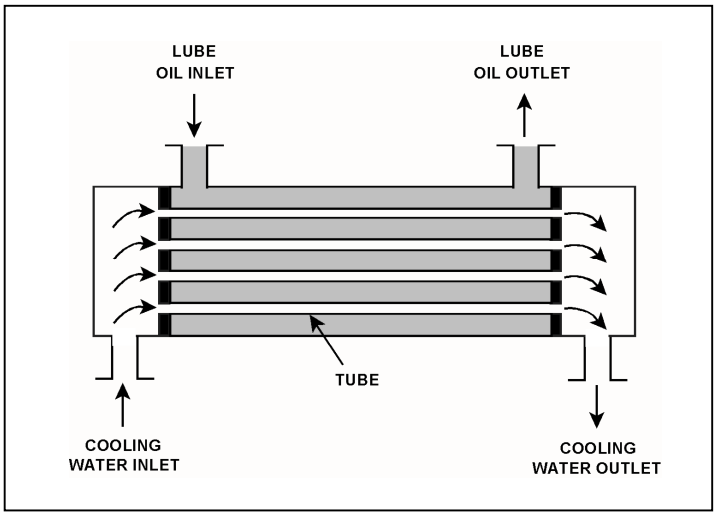

TOPIC: 291006
KNOWLEDGE: K1.07 [2.7/2.8]
QID: B5917 (P5916)

Refer to the drawing of an operating process water cleanup system (see figure below).

Assume there is no heat loss from the process water cleanup system to the surroundings and the process water flow rate does not change. If valve D closes fully, what will be the final steady-state temperature of the process water flowing through the filter?

A. 212°F

B. 302°F

C. 450°F

D. 540°F

ANSWER: D.

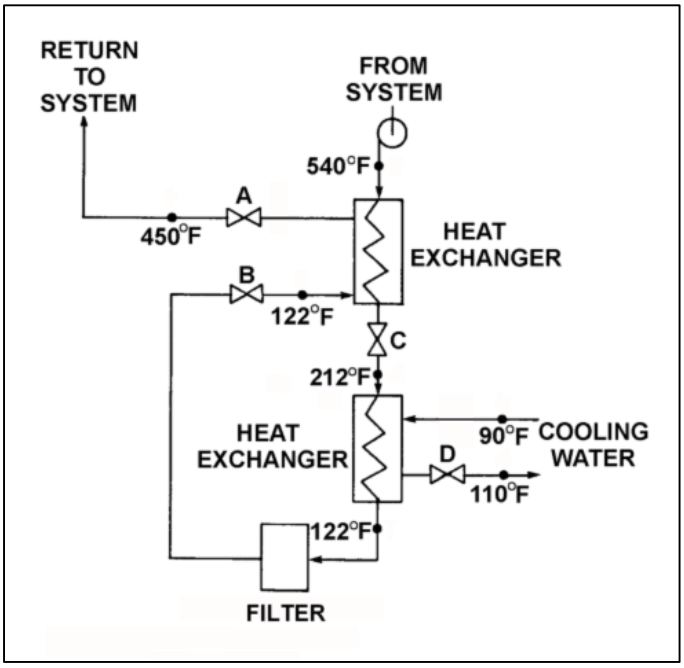

TOPIC: 291006
KNOWLEDGE: K1.07 [2.7/2.8]
QID: B7017 (P7016)

Given the following parameter values for a feedwater heater:

Feedwater inlet temperature = 320°F
Feedwater inlet pressure = 1,000 psia
Feedwater mass flow rate = 1.0×10^6 lbm/hr
Extraction steam pressure = 500 psia

Assume that the extraction steam enters the heater as a dry saturated vapor and leaves the heater as a saturated liquid at 500 psia.

Which one of the following is the approximate mass flow rate of extraction steam required to increase feedwater temperature to 380°F?

A. 5.2×10^4 lbm/hr

B. 7.9×10^4 lbm/hr

C. 8.4×10^4 lbm/hr

D. 8.9×10^4 lbm/hr

ANSWER: C.

TOPIC: 291006
KNOWLEDGE: K1.07 [2.7/2.8]
QID: B7316 (P7316)

Refer to the drawing of an operating parallel-flow lube oil heat exchanger (see figure below).

Unlike a counter-flow heat exchanger, in the parallel-flow heat exchanger the _____ temperature will always be greater than the _____ temperature.

A. CW outlet; LO inlet

B. CW outlet; LO outlet

C. LO outlet; CW inlet

D. LO outlet; CW outlet

ANSWER: D.

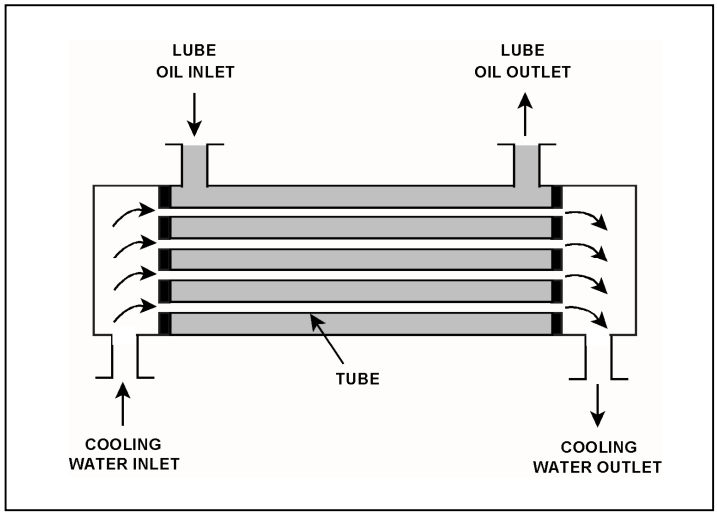

TOPIC: 291006
KNOWLEDGE: K1.08 [2.9/3.0]
QID: B331 (P534)

Refer to the drawing of an operating lube oil heat exchanger (see figure below).

Increasing the oil flow rate through the heat exchanger will cause the oil outlet temperature to _____ and the cooling water outlet temperature to _____.

A. increase; increase

B. increase; decrease

C. decrease; increase

D. decrease; decrease

ANSWER: A.

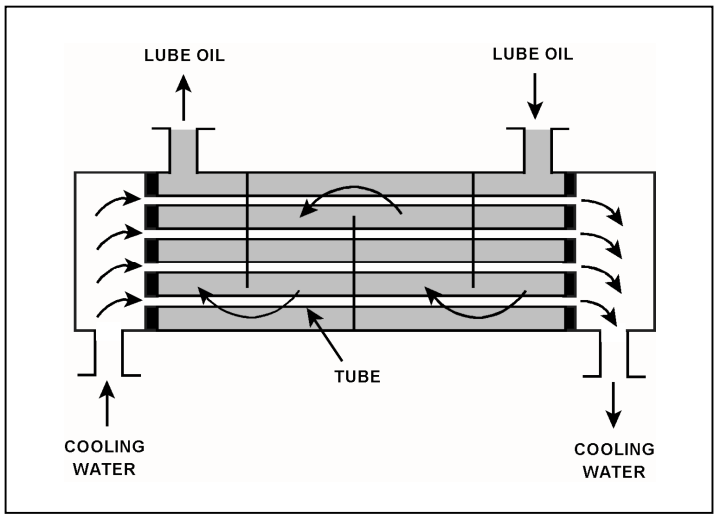

TOPIC: 291006
KNOWLEDGE: K1.08 [2.9/3.0]
QID: B431 (P632)

Refer to the drawing of an operating lube oil heat exchanger (see figure below).

Assume that the inlet lube oil and inlet cooling water temperatures are constant and cooling water flow rate remains the same. Decreasing the oil flow rate through the heat exchanger will cause the lube oil outlet temperature to _____ and the cooling water outlet temperature to _____.

A. increase, increase

B. increase, decrease

C. decrease, increase

D. decrease, decrease

ANSWER: D.

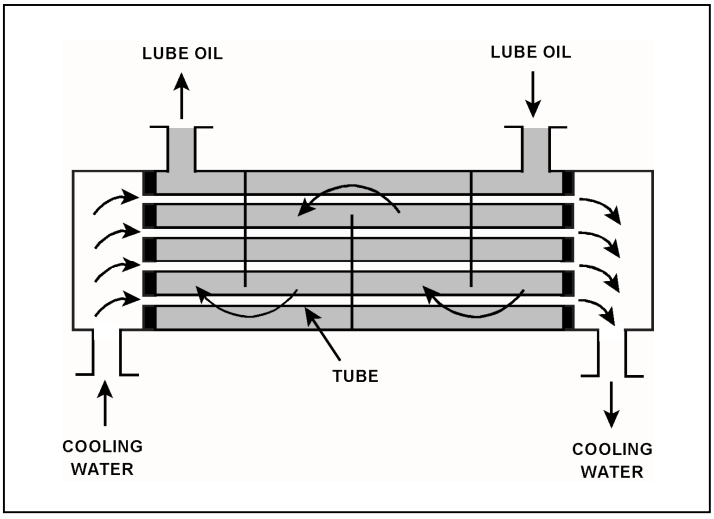

TOPIC: 291006
KNOWLEDGE: K1.08 [2.9/3.0]
QID: B834

Refer to the drawing of an operating lube oil heat exchanger (see figure below).

Given the following information:

$c_{p\text{-oil}}$ = 1.1 Btu/lbm-°F
$c_{p\text{-water}}$ = 1.0 Btu/lbm-°F
$\dot{m}_{oil}$ = 1.8 x 10^4 lbm/hr
$\dot{m}_{water}$ = 1.65 x 10^4 lbm/hr
$T_{oil\ in}$ = 170°F
$T_{oil\ out}$ = 120°F
$T_{water\ out}$ = 110°F
$T_{water\ in}$ = ?

Which one of the following is the cooling water inlet temperature ($T_{water\ in}$) for the heat exchanger?

A. 45°F

B. 50°F

C. 55°F

D. 60°F

ANSWER: B.

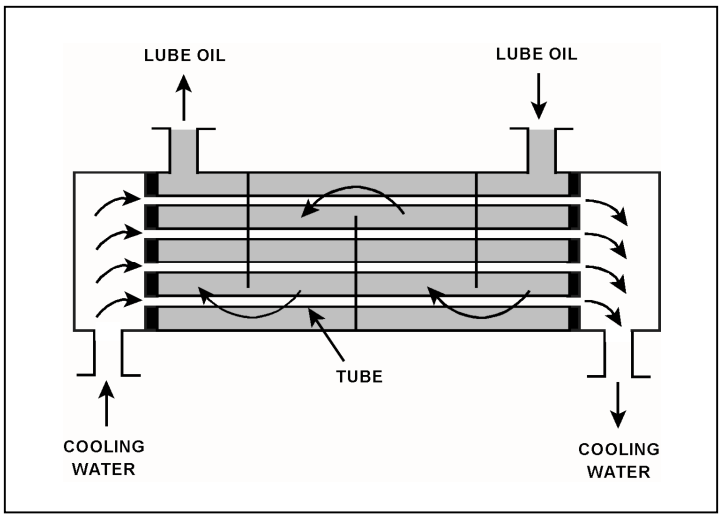

TOPIC: 291006
KNOWLEDGE: K1.08 [2.9/3.0]
QID: B934 (P3132)

Refer to the drawing of an operating lube oil heat exchanger (see figure below).

Given the following information:

$\dot{Q}_{oil}$ = 1.0 x 10^7 Btu/hr
$T_{oil\ in}$ = 170°F
$T_{oil\ out}$ = 134°F
$T_{water\ in}$ = 85°F
$T_{water\ out}$ = 112°F
$c_{p\text{-}oil}$ = 1.1 Btu/lbm-°F
$c_{p\text{-}water}$ = 1.0 Btu/lbm-°F
$\dot{m}_{water}$ = ?

Which one of the following is the approximate mass flow rate of the cooling water?

A. 4.5 x 10^5 lbm/hr

B. 3.7 x 10^5 lbm/hr

C. 2.5 x 10^5 lbm/hr

D. 1.2 x 10^5 lbm/hr

ANSWER: B.

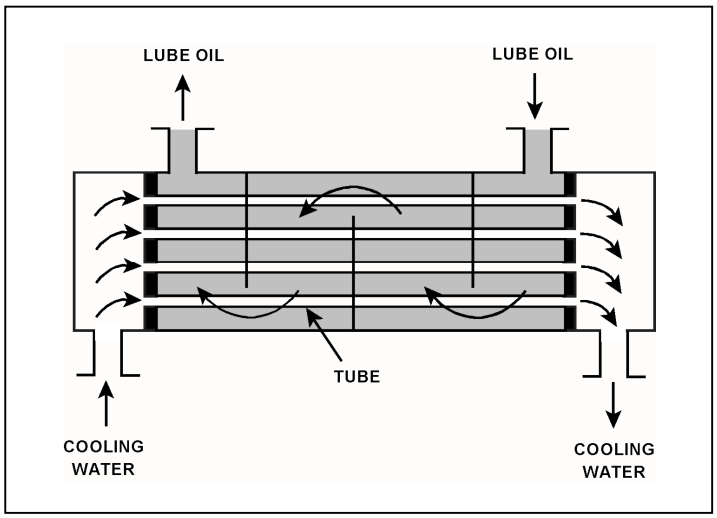

TOPIC: 291006
KNOWLEDGE: K1.08 [2.9/3.0]
QID: B1033

Refer to the drawing of an operating lube oil heat exchanger (see figure below).

Given the following information:

$c_{p\text{-oil}}$ = 1.1 Btu/lbm-°F
$c_{p\text{-water}}$ = 1.0 Btu/lbm-°F
$\dot{m}_{oil}$ = 1.8 x 10^4 lbm/hr
$\dot{m}_{water}$ = 1.65 x 10^4 lbm/hr
$T_{oil\ in}$ = 115°F
$T_{oil\ out}$ = 90°F
$T_{water\ out}$ = 110°F
$T_{water\ in}$ = ?

Which one of the following is the approximate cooling water inlet temperature ($T_{water\ in}$) for the heat exchanger?

A. 50°F

B. 60°F

C. 75°F

D. 80°F

ANSWER: D.

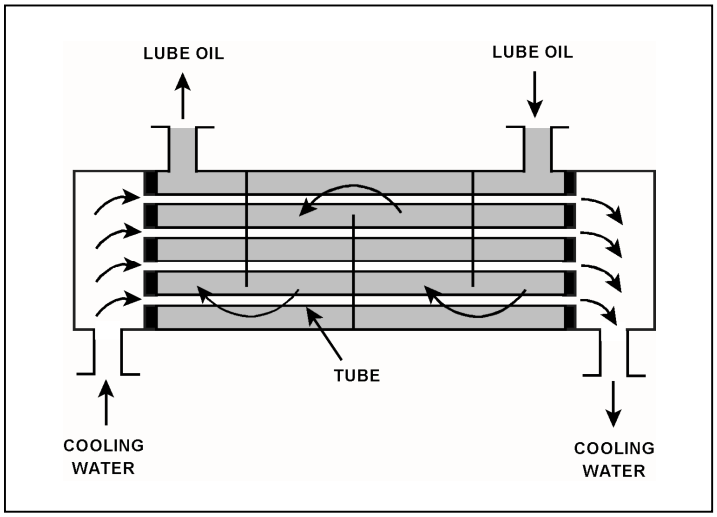

TOPIC: 291006
KNOWLEDGE: K1.08 [2.9/3.0]
QID: B1331 (P3432)

Refer to the drawing of an operating lube oil heat exchanger (see figure below).

Given the following information:

$\dot{m}_{oil}$ = 1.8 x 10^4 lbm/hr
$\dot{m}_{water}$ = 3.3 x 10^4 lbm/hr
$c_{p\text{-}oil}$ = 1.1 Btu/lbm-°F
$c_{p\text{-}water}$ = 1.0 Btu/lbm-°F
$T_{cw\text{-}in}$ = 90°F
$T_{cw\text{-}out}$ = 120°F
$T_{oil\text{-}in}$ = 170°F
$T_{oil\text{-}out}$ = ?

Which one of the following is the approximate temperature of the lube oil exiting the heat exchanger ($T_{oil\text{-}out}$)?

A. 110°F

B. 120°F

C. 130°F

D. 140°F

ANSWER: B.

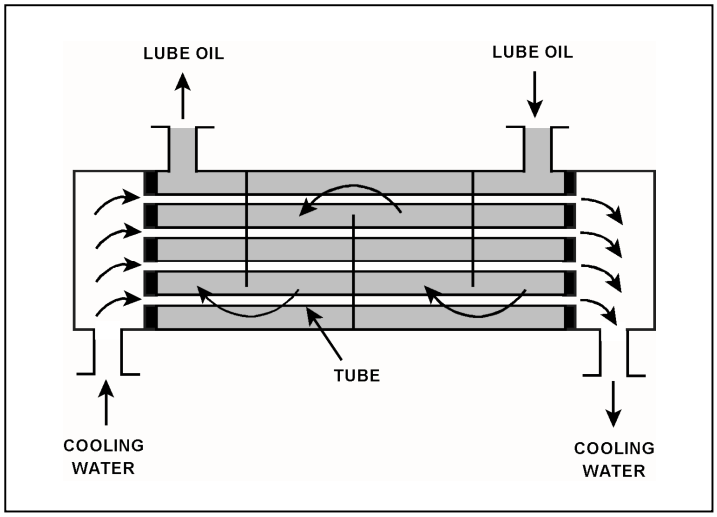

TOPIC: 291006
KNOWLEDGE: K1.08 [2.9/3.0]
QID: B1631 (P1634)

Refer to the drawing of an operating lube oil heat exchanger (see figure below).

Given the following information:

$\dot{m}_{oil}$ = 2.0 x 10^4 lbm/hr
$\dot{m}_{water}$ = 3.0 x 10^4 lbm/hr
$c_{p\text{-}oil}$ = 1.1 Btu/lbm-°F
$c_{p\text{-}water}$ = 1.0 Btu/lbm-°F
$T_{cw\text{-}in}$ = 92°F
$T_{cw\text{-}out}$ = 125°F
$T_{oil\text{-}in}$ = 180°F
$T_{oil\text{-}out}$ = ?

Which one of the following is the approximate temperature of the lube oil exiting the heat exchanger ($T_{oil\text{-}out}$)?

A. 126°F

B. 135°F

C. 147°F

D. 150°F

ANSWER: B.

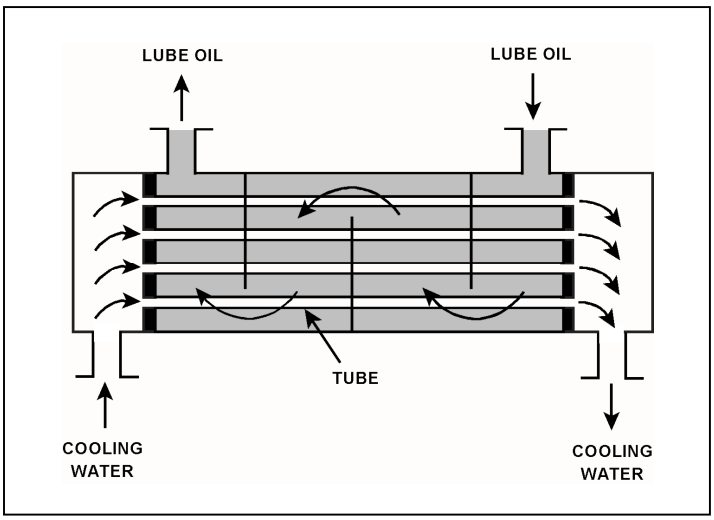

TOPIC: 291006
KNOWLEDGE: K1.08 [2.9/3.0]
QID: B1933 (P1934)

Refer to the drawing of an operating lube oil heat exchanger (see figure below).

Given the following information:

$\dot{m}_{oil}$ = 1.5 x 10^4 lbm/hr
$\dot{m}_{water}$ = 2.5 x 10^4 lbm/hr
$c_{p\text{-}oil}$ = 1.1 Btu/lbm-°F
$c_{p\text{-}water}$ = 1.0 Btu/lbm-°F
$T_{cw\text{-}in}$ = 92°F
$T_{cw\text{-}out}$ = 125°F
$T_{oil\text{-}in}$ = 160°F
$T_{oil\text{-}out}$ = ?

Which one of the following is the approximate temperature of the lube oil exiting the heat exchanger ($T_{oil\text{-}out}$)?

A. 110°F

B. 127°F

C. 135°F

D. 147°F

ANSWER: A.

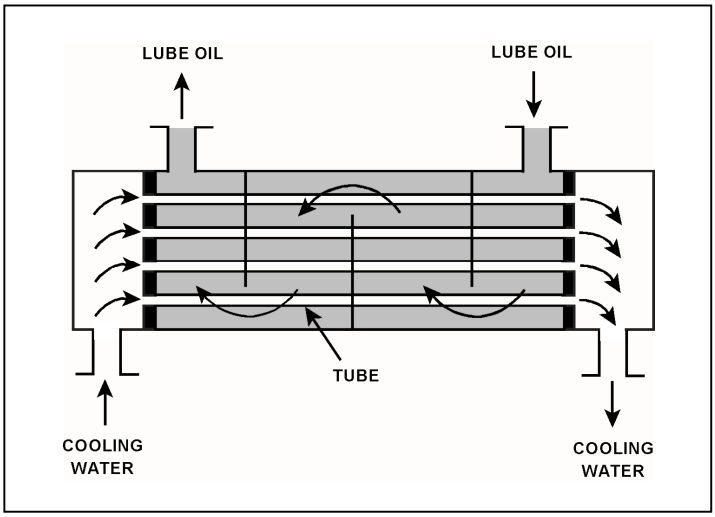

TOPIC: 291006
KNOWLEDGE: K1.08 [2.9/3.0]
QID: B2132 (P2133)

Refer to the drawing of a lube oil heat exchanger (see figure below).

The lube oil heat exchanger is in service with the following inlet temperatures:

Lube oil inlet temperature = 120°F
Cooling water inlet temperature = 60°F

Assuming that cooling water flow rate is greater than lube oil flow rate, which one of the following pairs of heat exchanger outlet temperatures is possible? (Assume both fluids have the same specific heat.)

	Lube Oil Outlet Temp	Cooling Water Outlet Temp
A.	100°F	100°F
B.	90°F	90°F
C.	80°F	80°F
D.	80°F	100°F

ANSWER: C.

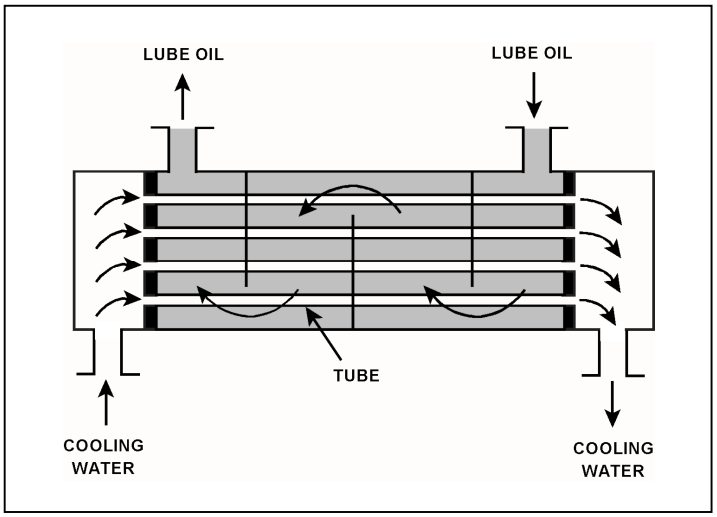

TOPIC: 291006
KNOWLEDGE: K1.08 [2.9/3.0]
QID: B2233 (P2434)

Refer to the drawing of a lube oil heat exchanger (see figure below).

The lube oil heat exchanger is in service with the following inlet temperatures:

Lube oil inlet temperature = 130°F
Cooling water inlet temperature = 70°F

Assuming that cooling water flow rate is greater than lube oil flow rate, which one of the following pairs of heat exchanger outlet temperatures is possible? (Assume both fluids have the same specific heat.)

	Lube Oil Outlet Temp	Cooling Water Outlet Temp
A.	90°F	100°F
B.	90°F	110°F
C.	100°F	100°F
D.	100°F	110°F

ANSWER: A.

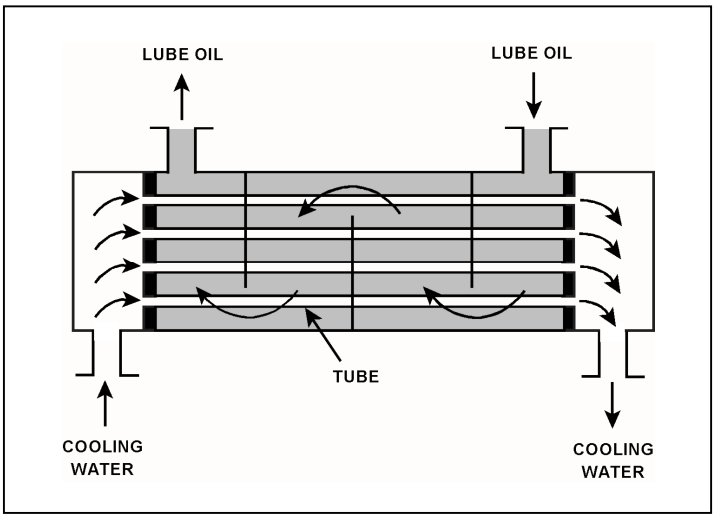

TOPIC: 291006
KNOWLEDGE: K1.08 [2.9/3.0]
QID: B2534 (P2532)

Refer to the drawing of an operating lube oil heat exchanger (see figure below).

Given the following information:

$\dot{m}_{oil}$ = 1.5 x 10^4 lbm/hr
$\dot{m}_{water}$ = 2.5 x 10^4 lbm/hr
$c_{p\text{-}oil}$ = 1.1 Btu/lbm-°F
$c_{p\text{-}water}$ = 1.0 Btu/lbm-°F
$T_{oil\text{-}in}$ = 160°F
$T_{oil\text{-}out}$ = 110°F
$T_{cw\text{-}in}$ = 92°F
$T_{cw\text{-}out}$ = ?

Which one of the following is the approximate temperature of the cooling water exiting the heat exchanger ($T_{cw\text{-}out}$)?

A. 110°F

B. 115°F

C. 120°F

D. 125°F

ANSWER: D.

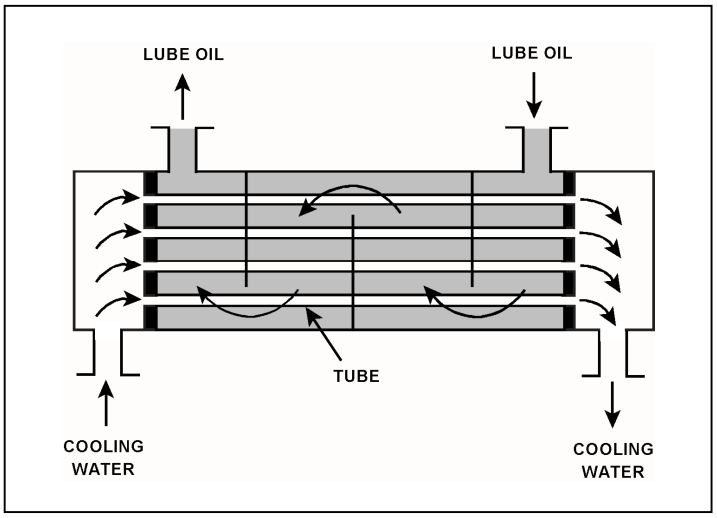

TOPIC: 291006
KNOWLEDGE: K1.08 [2.9/3.0]
QID: B2632 (P2633)

Refer to the drawing of a lube oil heat exchanger (see figure below).

The lube oil heat exchanger is in service with the following inlet temperatures:

Lube oil inlet temperature = 110°F
Cooling water inlet temperature = 75°F

Assuming that cooling water flow rate is greater than lube oil flow rate, which one of the following pairs of heat exchanger outlet temperatures is possible? (Assume both fluids have the same specific heat.)

	Lube Oil Outlet Temp	Cooling Water Outlet Temp
A.	100°F	100°F
B.	100°F	90°F
C.	90°F	100°F
D.	90°F	90°F

ANSWER: D.

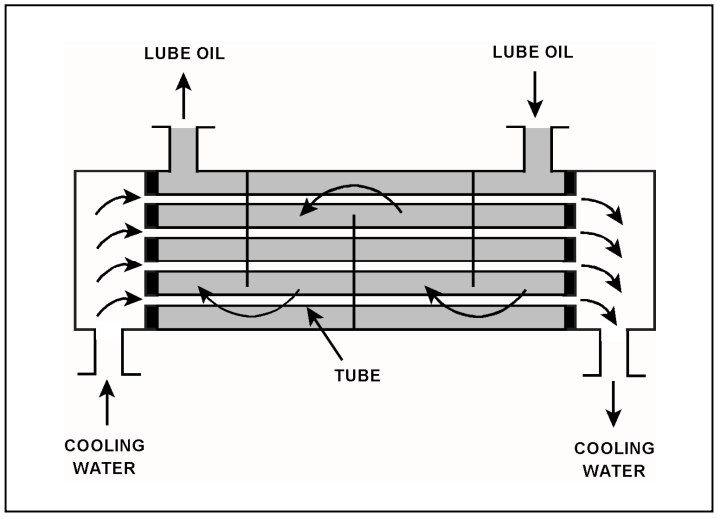

TOPIC: 291006
KNOWLEDGE: K1.08 [2.9/3.0]
QID: B2733 (P2733)

Refer to the drawing of a lube oil heat exchanger (see figure below).

The lube oil heat exchanger is in service with the following inlet temperatures:

Lube oil inlet temperature = 130°F
Cooling water inlet temperature = 70°F

Assuming that cooling water flow rate is greater than lube oil flow rate, which one of the following pairs of heat exchanger outlet temperatures is not possible? (Assume both fluids have the same specific heat.)

	Lube Oil Outlet Temp	Cooling Water Outlet Temp
A.	90°F	86°F
B.	100°F	85°F
C.	110°F	84°F
D.	120°F	83°F

ANSWER: D.

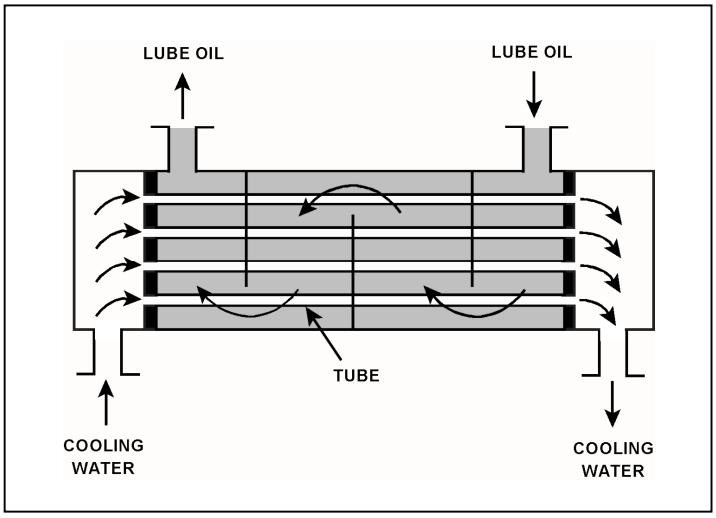

TOPIC: 291006
KNOWLEDGE: K1.08 [2.9/3.0]
QID: B2832 (P4517)

Refer to the drawing of an operating lube oil heat exchanger (see figure below).

Given the following initial parameters:

Cooling water inlet temperature ($T_{cw\text{-}in}$) = 75°F
Cooling water outlet temperature ($T_{cw\text{-}out}$) = 105°F
Oil inlet temperature ($T_{oil\text{-}in}$) = 140°F
Oil outlet temperature ($T_{oil\text{-}out}$) = 100°F

Air introduction to the heat exchanger results in some of the heat exchanger tubes becoming uncovered. As a result, $T_{cw\text{-}out}$ decreases to 99°F. Assume that the mass flow rate and specific heat of both fluids remain the same, and that Toil-in does not change. Which one of the following will be the approximate temperature of the lube oil exiting the heat exchanger ($T_{oil\text{-}out}$)?

A. 99°F

B. 108°F

C. 116°F

D. 122°F

ANSWER: B.

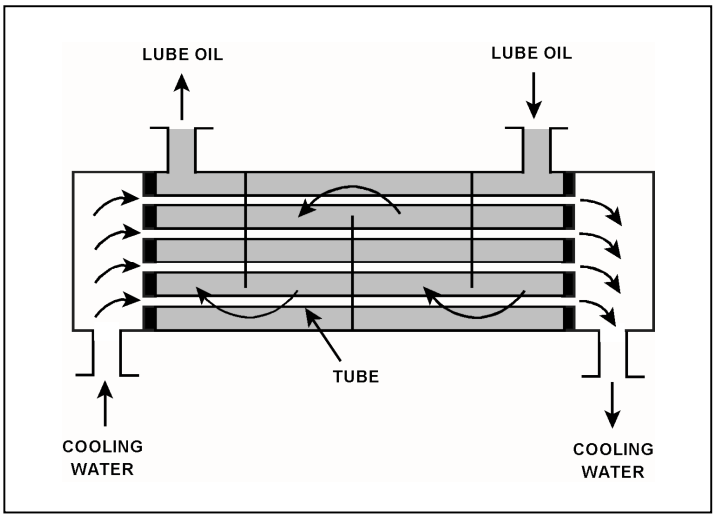

TOPIC: 291006
KNOWLEDGE: K1.08 [2.9/3.0]
QID: B2933 (P2934)

Refer to the drawing of a lube oil heat exchanger (see figure below).

The lube oil heat exchanger is in service with the following inlet temperatures:

Lube oil inlet temperature = 130°F
Cooling water inlet temperature = 70°F

Assuming the cooling water flow rate exceeds the lube oil flow rate, which one of the following pairs of heat exchanger outlet temperatures is possible? (Assume both fluids have the same specific heat.)

	Lube Oil Outlet Temp	Cooling Water Outlet Temp
A.	100°F	90°F
B.	100°F	100°F
C.	110°F	90°F
D.	110°F	100°F

ANSWER: A.

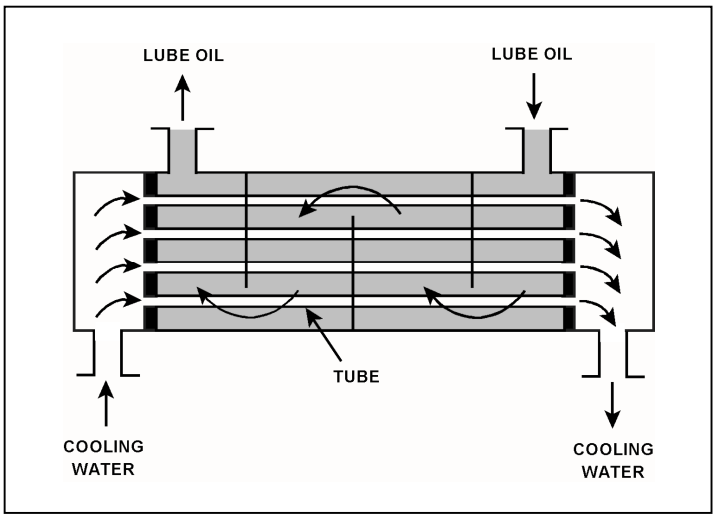

TOPIC: 291006
KNOWLEDGE: K1.08 [2.9/3.0]
QID: B3032 (P3081)

The volumetric flow rate of cooling water entering a heat exchanger is 500 gpm.

Given the following:

- Cooling water pressure entering and leaving the heat exchanger is 10 psig.
- Cooling water inlet temperature is 90°F.
- Cooling water outlet temperature is 160°F.
- Heat exchanger inlet and outlet piping have the same diameter.

What is the approximate volumetric flow rate of the cooling water exiting the heat exchanger?

A. 496 gpm

B. 500 gpm

C. 504 gpm

D. 509 gpm

ANSWER: D.

TOPIC: 291006
KNOWLEDGE: K1.08 [2.9/3.0]
QID: B3431

Refer to the drawing of an operating lube oil heat exchanger (see figure below).

Given the following information:

$c_{p\text{-oil}}$ = 1.1 Btu/lbm-°F
$c_{p\text{-water}}$ = 1.0 Btu/lbm-°F
$T_{oil\ in}$ = 174°F
$T_{oil\text{-out}}$ = 114°F
$T_{water\text{-in}}$ = 85°F
$T_{water\text{-out}}$ = 121°F
$\dot{m}_{oil}$ = 4.0×10^4 lbm/hr
$\dot{m}_{water}$ = ?

What is the approximate mass flow rate of the cooling water?

A. 8.0×10^4 lbm/hr

B. 7.3×10^4 lbm/hr

C. 2.6×10^4 lbm/hr

D. 2.2×10^4 lbm/hr

ANSWER: B.

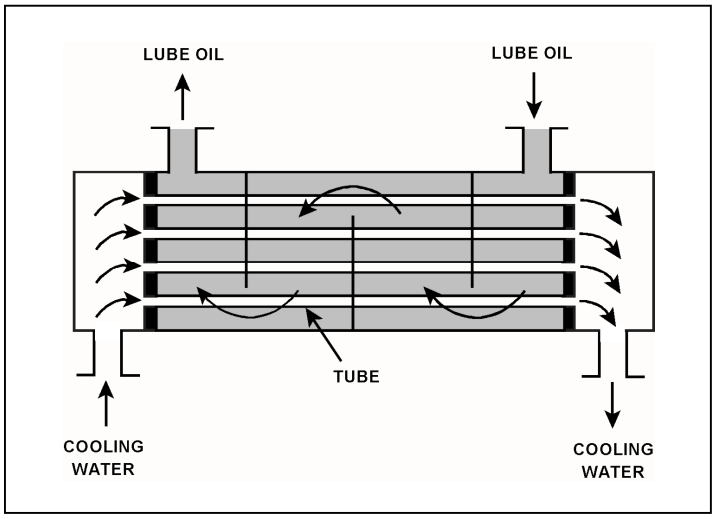

TOPIC: 291006
KNOWLEDGE: K1.08 [2.9/3.0]
QID: B3732 (P3732)

Refer to the drawing of a lube oil heat exchanger (see figure below).

The lube oil heat exchanger is in service with the following inlet temperatures:

Lube oil inlet temperature = 130°F
Cooling water inlet temperature = 70°F

Assume that cooling water mass flow rate is less than lube oil mass flow rate, and that both fluids have the same specific heat. Which one of the following pairs of heat exchanger outlet temperatures is not possible?

	Lube Oil Outlet Temp	Cooling Water Outlet Temp
A.	100°F	105°F
B.	105°F	105°F
C.	110°F	90°F
D.	115°F	90°F

ANSWER: C.

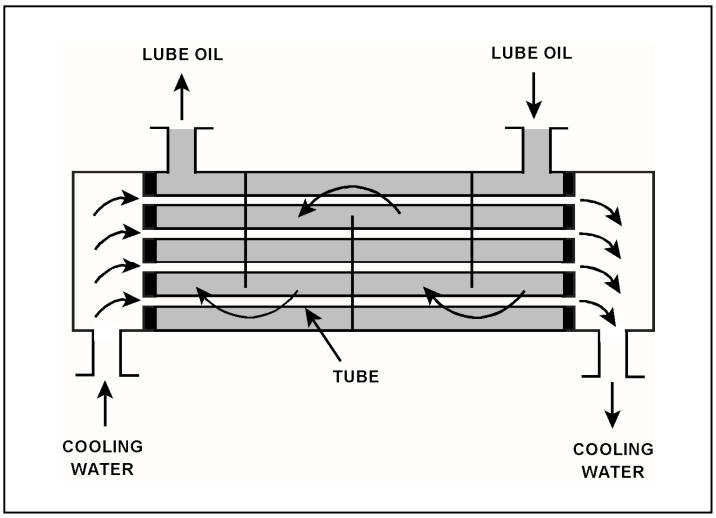

TOPIC: 291006
KNOWLEDGE: K1.08 [2.9/3.0]
QID: B3733 (P3783)

A condensate pump is taking suction on a main condenser hotwell, containing water at 100°F, and discharging the water at a volumetric flow rate of 100,000 gpm to the main feedwater system. The main feedwater system heats the water to 400°F before it enters the reactor vessel. Assume there is no leakage, and no bypass or recirculation flow paths are in use.

What is the approximate volumetric flow rate of the feedwater entering the reactor vessel?

A. 100,000 gpm

B. 105,000 gpm

C. 109,000 gpm

D. 115,000 gpm

ANSWER: D.

TOPIC: 291006
KNOWLEDGE: K1.08 [2.9/3.0]
QID: B4416 (P4416)

Refer to the drawing of a lube oil heat exchanger (see figure below).

The lube oil heat exchanger is in service with the following inlet temperatures:

Lube oil inlet temperature = 120°F
Cooling water inlet temperature = 60°F

Assuming that cooling water flow rate is greater than lube oil flow rate, which one of the following pairs of heat exchanger outlet temperatures is possible? (Assume both fluids have the same specific heat.)

	Lube Oil Outlet Temp	Cooling Water Outlet Temp
A.	90°F	100°F
B.	90°F	85°F
C.	95°F	100°F
D.	95°F	85°F

ANSWER: B.

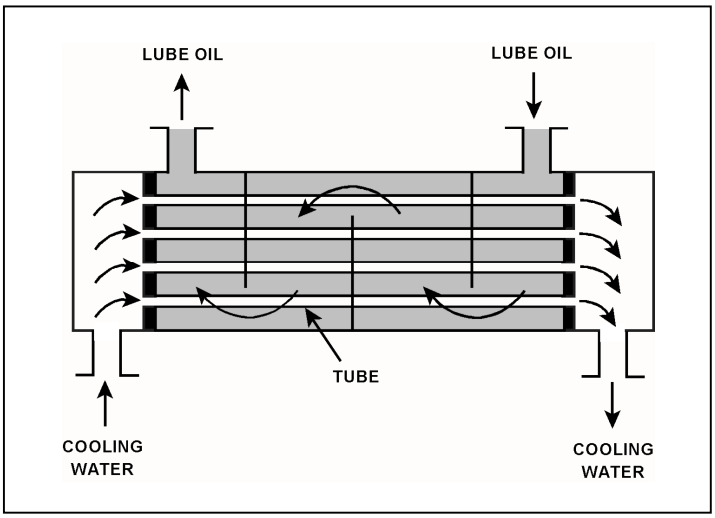

TOPIC: 291006
KNOWLEDGE: K1.08 [2.9/3.0]
QID: B5517 (P5516)

Refer to the drawing of a lube oil heat exchanger (see figure below).

The lube oil heat exchanger is in service with the following inlet temperatures:

Lube oil inlet temperature = 130°F
Cooling water inlet temperature = 70°F

Given that cooling water mass flow rate is greater than lube oil mass flow rate, which one of the following pairs of heat exchanger outlet temperatures is not possible? (Assume both fluids have the same specific heat.)

	Lube Oil Outlet Temp	Cooling Water Outlet Temp
A.	90°F	105°F
B.	90°F	100°F
C.	110°F	95°F
D.	110°F	85°F

ANSWER: C.

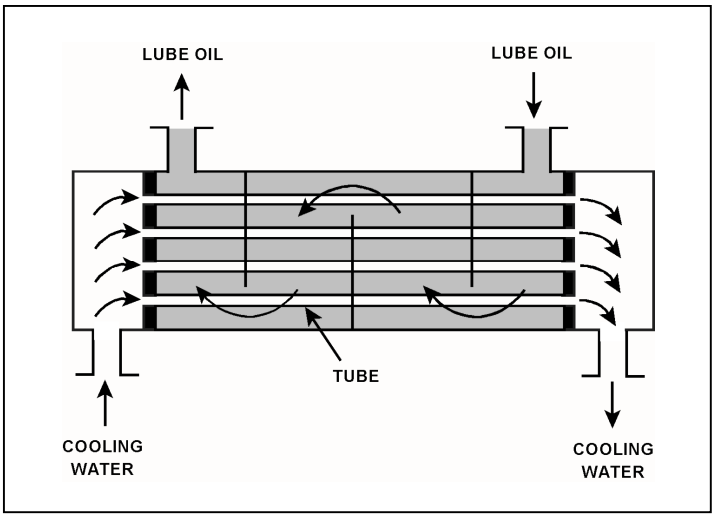

TOPIC: 291006
KNOWLEDGE: K1.08 [2.9/3.0]
QID: B5617 (P5616)

Refer to the drawing of an operating lube oil heat exchanger (see figure below).

Assume that the inlet lube oil and inlet cooling water temperatures are constant and the lube oil flow rate remains the same. If the cooling water flow rate increases, the lube oil outlet temperature will _____; and the cooling water outlet temperature will _____.

A. increase; increase

B. increase; decrease

C. decrease; increase

D. decrease; decrease

ANSWER: D.

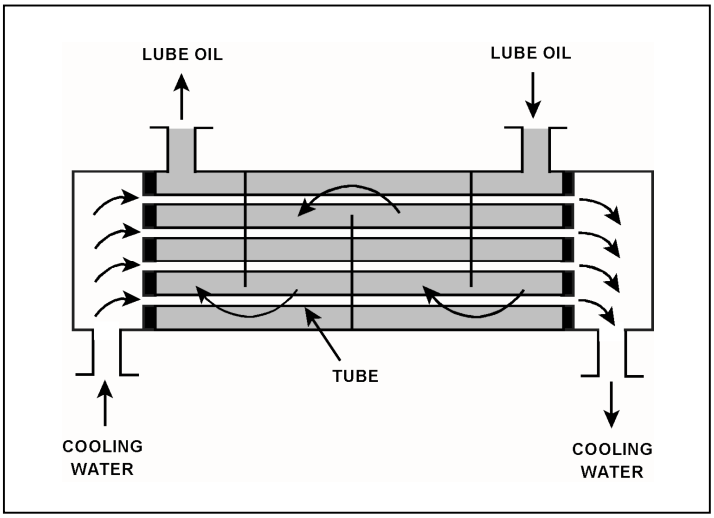

TOPIC: 291006
KNOWLEDGE: K1.08 [2.9/3.0]
QID: B6516 (P6516)

Refer to the drawing of a heat exchanger (see figure below).

The heat exchanger is in service with the following inlet temperatures:

Service water inlet temperature = 130°F
Cooling water inlet temperature = 70°F

Assume that both fluids have the same specific heat, and that service water mass flow rate is greater than cooling water mass flow rate. Which one of the following pairs of heat exchanger outlet temperatures is possible?

	Service Water Outlet Temp.	Cooling Water Outlet Temp.
A.	120°F	82°F
B.	110°F	90°F
C.	100°F	98°F
D.	90°F	106°F

ANSWER: A.

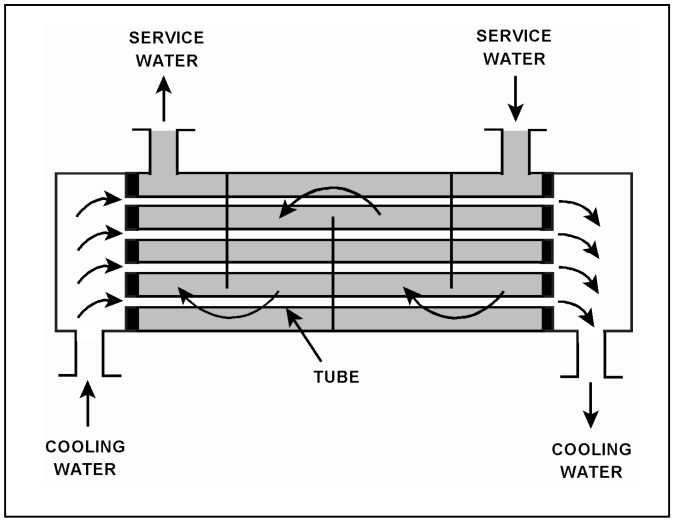

TOPIC: 291006
KNOWLEDGE: K1.08 [2.9/3.0]
QID: B7517 (P7516)

Refer to the drawing of a heat exchanger (see figure below).

The heat exchanger is in service with the following inlet temperatures:

Cooling water inlet temperature = 70°F
Service water inlet temperature = 130°F

Assume that both fluids have the same specific heat, and that cooling water mass flow rate is greater than service water mass flow rate. Which one of the following pairs of heat exchanger outlet temperatures is not possible?

	Cooling Water Outlet Temp.	Service Water Outlet Temp.
A.	78°F	120°F
B.	90°F	110°F
C.	98°F	100°F
D.	100°F	90°F

ANSWER: B.

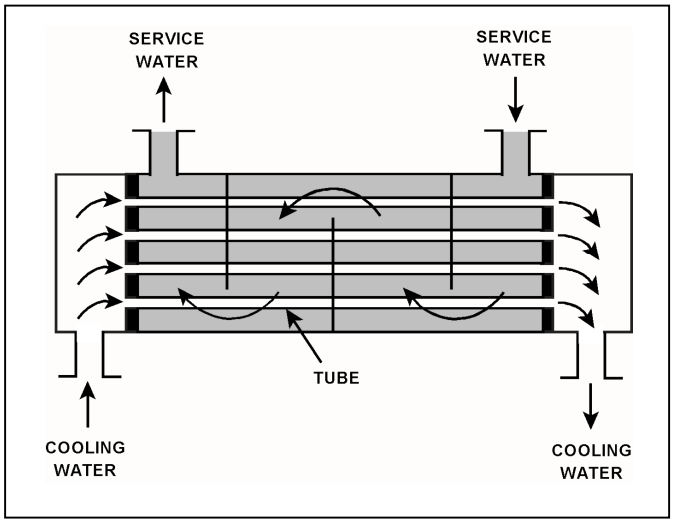

TOPIC: 291006
KNOWLEDGE: K1.09 [2.7/2.8]
QID: B232

A reactor is shut down with a reactor coolant temperature of 400°F and all control rods fully inserted. What is the major adverse consequence resulting from rapidly reducing the reactor coolant temperature to 250°F?

A. Excessive stress in the ceramic fuel pellets.

B. Excessive stress in the reactor vessel wall.

C. Uncontrolled reactor criticality.

D. Loss of core inlet subcooling.

ANSWER: B.

TOPIC: 291006
KNOWLEDGE: K1.09 [2.7/2.8]
QID: B633 (P2832)

Steam has been admitted to a main condenser for 25 minutes with no cooling water flow. Initiating full cooling water flow rate at this time will...

A. reduce the stress on the condenser shell by rapidly cooling the shell.

B. reduce the stress on the condenser tubes by rapidly cooling the tubes.

C. induce large thermal stresses on the condenser shell.

D. induce large thermal stresses on the junctions between the condenser tubes and the tubesheet.

ANSWER: D.

TOPIC: 291006
KNOWLEDGE: K1.10 [2.8/2.8]
QID: B32

A nuclear power plant is operating at full power with 2°F of condensate subcooling. Which one of the following changes will decrease subcooling of the condensate entering the main condenser hotwell? (Assume condensate temperature does not change.)

A. Decreased circulating water flow rate

B. Increased gas buildup in the main condenser

C. Decreased main condenser hotwell level

D. Decreased main turbine steam flow

ANSWER: D.

TOPIC: 291006
KNOWLEDGE: K1.10 [2.8/2.8]
QID: B111 (P1834)

During normal nuclear power plant operation, a main condenser develops an air leak which decreases vacuum at a rate of 1.0 inch Hg/min. Which one of the following will increase because of this condition? (Assume that main turbine steam inlet valve position does not change.)

A. Steam cycle efficiency.

B. Main turbine work output.

C. Condenser hotwell temperature.

D. Low pressure turbine exhaust steam moisture content.

ANSWER: C.

TOPIC: 291006
KNOWLEDGE: K1.10 [2.8/2.8]
QID: B733

Which one of the following changes will result in <u>increased</u> subcooling of the condensate water in the main condenser hotwell?

A. Decreased circulating water flow

B. Increased circulating water temperature

C. Decreased main turbine-generator MW load

D. Isolating one bay of the condenser circulating water system

ANSWER: C.

TOPIC: 291006
KNOWLEDGE: K1.10 [2.8/2.8]
QID: B1232

Assuming that condenser cooling water inlet temperature and flow rate do <u>not</u> change, if condenser vacuum improves, condensate temperature will...

A. increase, because condensate subcooling has decreased.

B. increase, because condenser saturation pressure has increased.

C. decrease, because condensate subcooling has increased.

D. decrease, because condenser saturation pressure has decreased.

ANSWER: D.

TOPIC: 291006
KNOWLEDGE: K1.10 [2.8/2.8]
QID: B2133

During normal plant operation at 100 percent power, a main condenser develops an air leak that degrades vacuum at a rate of 1 inch Hg/min. Assuming the plant continues to operate at 100 percent power, condenser hotwell temperature will...

A. increase, because condensation of turbine exhaust steam is occurring at a higher temperature.

B. increase, because more work is being extracted from the steam by the turbine.

C. decrease, because condensation of turbine exhaust steam is occurring at a lower temperature.

D. decrease, because less work is being extracted from the steam by the turbine.

ANSWER: A.

TOPIC: 291006
KNOWLEDGE: K1.10 [2.8/2.8]
QID: B2633 (P2634)

A nuclear power plant is operating at steady-state 100 percent power. Assuming that condenser cooling water inlet temperature and flow rate do <u>not</u> change, if main condenser vacuum <u>decreases</u>, condensate temperature will...

A. increase, because condensate subcooling has decreased.

B. increase, because condenser saturation pressure has increased.

C. decrease, because condensate subcooling has increased.

D. decrease, because condenser saturation pressure has decreased.

ANSWER: B.

TOPIC: 291006
KNOWLEDGE: K1.10 [2.8/2.8]
QID: B2736 (P3534)

A nuclear power plant is operating at steady-state 100 percent power when air inleakage causes main condenser vacuum to decrease from 28 inches Hg vacuum to 27 inches Hg vacuum. Assume the main steam inlet pressure, inlet quality, and mass flow rate through the main turbine do not change, and the condenser cooling water inlet temperature and mass flow rate do not change.

When the plant stabilizes, turbine exhaust quality will be _____; and turbine exhaust temperature will be _____.

A. higher; higher

B. higher; lower

C. lower; higher

D. lower; lower

ANSWER: A.

TOPIC: 291006
KNOWLEDGE: K1.11 [2.8/2.8]
QID: B374

A pressure gauge on a condenser reads 27 inches of mercury (Hg) vacuum. What is the absolute pressure corresponding to this vacuum?

A. 1.0 psia

B. 1.5 psia

C. 13.5 psia

D. 14.0 psia

ANSWER: B.

TOPIC: 291006
KNOWLEDGE: K1.11 [2.8/2.8]
QID: B434

A steam-driven turbine exhausts to a condenser. If the condenser vacuum improves, the turbine exhaust pressure will _____, and the turbine power output will _____.

A. increase; increase

B. increase; decrease

C. decrease; increase

D. decrease; decrease

ANSWER: C.

TOPIC: 291006
KNOWLEDGE: K1.11 [2.8/2.8]
QID: B835

A pressure gauge on a main condenser reads 2 psiv. What is the approximate absolute pressure in the main condenser?

A. 2 psia

B. 13 psia

C. 15 psia

D. 17 psia

ANSWER: B.

TOPIC: 291006
KNOWLEDGE: K1.11 [2.8/2.8]
QID: B1035

A main condenser absolute pressure of 4 inches Hg is equivalent to...

A. 11 inches Hg vacuum.

B. 13 inches Hg vacuum.

C. 26 inches Hg vacuum.

D. 28 inches Hg vacuum.

ANSWER: C.

TOPIC: 291006
KNOWLEDGE: K1.11 [2.8/2.8]
QID: B1633

Which one of the following is the approximate main condenser vacuum when main condenser pressure is 7 inches Hg absolute?

A. 0 inches Hg vacuum

B. 7 inches Hg vacuum

C. 23 inches Hg vacuum

D. 30 inches Hg vacuum

ANSWER: C.

TOPIC: 291006
KNOWLEDGE: K1.11 [2.8/2.8]
QID: B2131

Which one of the following is the approximate main condenser vacuum (inches Hg vacuum) when main condenser pressure is 16 inches Hg absolute?

A. 4 inches Hg vacuum

B. 8 inches Hg vacuum

C. 12 inches Hg vacuum

D. 14 inches Hg vacuum

ANSWER: D.

TOPIC: 291006
KNOWLEDGE: K1.12 [2.9/3.0]
QID: B1133

A reactor is shut down at 400 psia when all forced core coolant flow is lost. Which one of the following will enhance natural circulation inside the reactor vessel (RV)?

A. Decrease RV pressure to 300 psia.

B. Increase RV pressure to 500 psia.

C. Decrease RV water level to just above the top of the core.

D. Increase RV water level to just above the steam separators.

ANSWER: D.

TOPIC: 291006
KNOWLEDGE: K1.13 [2.7/2.9]
QID: B34

What is the saturation temperature for a boiling water reactor operating at 920 psig?

A. 532.6°F

B. 533.9°F

C. 536.5°F

D. 538.4°F

ANSWER: C.

TOPIC: 291006
KNOWLEDGE: K1.13 [2.7/2.9]
QID: B534

Which one of the following is the state of water at 20 psia and 250°F?

A. Subcooled liquid

B. Saturated liquid

C. Mixture of saturated liquid and vapor

D. Superheated vapor

ANSWER: D.

TOPIC: 291006
KNOWLEDGE: K1.13 [2.7/2.9]
QID: B1335

Which one of the following describes the state of water at 35 psia and 240°F?

A. Subcooled liquid

B. Saturated liquid

C. Mixture of saturated liquid and vapor

D. Superheated vapor

ANSWER: A.

TOPIC: 291006
KNOWLEDGE: K1.13 [2.7/2.9]
QID: B1433

Which one of the following is the state of water at 120 psig and 340°F?

A. Subcooled liquid

B. Saturated liquid

C. Mixture of saturated liquid and saturated vapor

D. Superheated vapor

ANSWER: A.

TOPIC: 291006
KNOWLEDGE: K1.13 [2.7/2.9]
QID: B1536

Which one of the following describes the state of water at 160 psig and 366°F?

A. Saturated liquid

B. Subcooled liquid

C. Superheated vapor

D. Mixture of saturated liquid and vapor

ANSWER: B.

TOPIC: 291006
KNOWLEDGE: K1.13 [2.7/2.9]
QID: B2336

Which one of the following describes the state of water at 160 psig and 372°F?

A. Saturated liquid

B. Subcooled liquid

C. Superheated vapor

D. Mixture of saturated liquid and vapor

ANSWER: C.

TOPIC: 291006
KNOWLEDGE: K1.13 [2.7/2.9]
QID: B2834

Which one of the following describes the state of water at 150 psig and 360°F?

A. Saturated liquid

B. Subcooled liquid

C. Superheated vapor

D. Mixture of saturated liquid and vapor

ANSWER: B.

TOPIC: 291006
KNOWLEDGE: K1.14 [3.1/3.2]
QID: B535

What is the reason for ensuring that a piping system is completely filled and vented prior to initiating system flow?

A. To minimize the system head losses

B. To ensure all noncondensible gases are removed from the piping system to reduce system corrosion

C. To preclude a reduction in the overall system heat transfer coefficient

D. To minimize the potential for water hammer

ANSWER: D.

TOPIC: 291006
KNOWLEDGE: K1.14 [3.1/3.2]
QID: B635

The discharge valve for a large operating centrifugal pump should be positioned slowly to minimize the...

A. potential for causing water hammer.

B. change in available net positive suction head.

C. mechanical wear on the valve seat and stem packing.

D. differential pressure stress exerted on the valve disk and stem.

ANSWER: A.

TOPIC: 291006
KNOWLEDGE: K1.14 [3.1/3.2]
QID: B1135

After starting a large motor-driven centrifugal cooling water pump, the pump discharge valve should be opened <u>slowly</u> to minimize the...

A. potential for a water hammer.

B. potential for pump cavitation.

C. motor running current requirements.

D. net positive suction head requirements.

ANSWER: A.

TOPIC: 291006
KNOWLEDGE: K1.15 [2.6/2.8]
QID: B3635 (P3633)

A main turbine-generator is operating at 80 percent load with the following initial steady-state temperatures for the main turbine lube oil heat exchanger:

$T_{oil\ in}$ = 174°F
$T_{oil\ out}$ = 114°F
$T_{water\ in}$ = 85°F
$T_{water\ out}$ = 115°F

After six months of main turbine-generator operation, the following final steady-state lube oil heat exchanger temperatures are observed:

$T_{oil\ in}$ = 179°F
$T_{oil\ out}$ = 119°F
$T_{water\ in}$ = 85°F
$T_{water\ out}$ = 115°F

Assume the final cooling water and lube oil flow rates are the same as the initial flow rates, and the specific heat values for the cooling water and lube oil do not change.

Which one of the following could be responsible for the differences between the initial and final heat exchanger steady-state temperatures?

A. The heat exchanger tubes have become fouled with scale.

B. The temperature of the cooling water source has increased.

C. The final main turbine-generator load is higher than the initial load.

D. The final main turbine-generator load is lower than the initial load.

ANSWER: A.

TOPIC: 291006
KNOWLEDGE: K1.15 [2.6/2.8]
QID: B4616 (P4617)

Refer to the drawing of two system curves for a main condenser cooling water system (see figure below).

Which one of the following will cause the system curve to shift from the solid curve toward the dashed curve?

A. The main condenser tubes are cleaned.

B. The main condenser tubes become increasingly fouled.

C. Cooling water flow rate is increased by 25 percent by starting an additional cooling water pump.

D. Cooling water flow rate is decreased by 25 percent by stopping one of the operating cooling water pumps.

ANSWER: A.

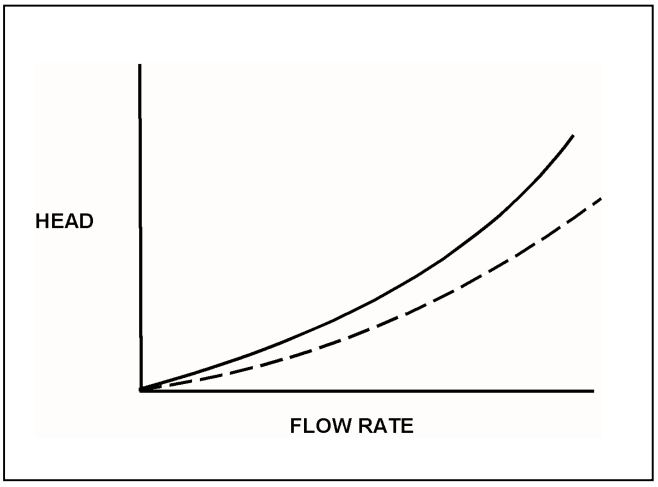

TOPIC: 291006
KNOWLEDGE: K1.15 [2.6/2.8]
QID: B5117 (P5116)

Refer to the drawing of two system curves for a typical main condenser cooling water system (see figure below).

Which one of the following will cause the system curve to shift from the solid curve toward the dashed curve?

A. The main condenser tubes are cleaned.

B. The main condenser tubes become increasingly fouled.

C. Cooling water system flow rate is increased by 25 percent by starting an additional cooling water pump.

D. Cooling water system flow rate is decreased by 25 percent by stopping one of the operating cooling water pumps.

ANSWER: B.

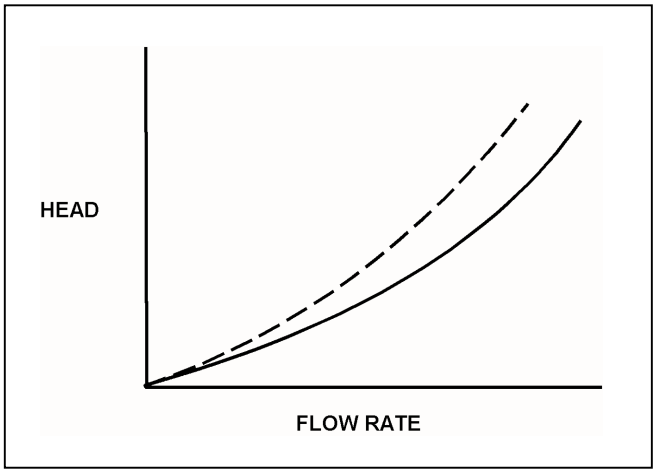

TOPIC: 291006
KNOWLEDGE: K1.15 [2.6/2.8]
QID: B7625 (P7625)

Refer to the drawing of an operating lube oil heat exchanger (see figure below).

The heat exchanger was initially placed in continuous service 6 months ago. During the 6-month period of operation, mineral deposits have accumulated inside the heat exchanger tubes.

The following parameters are currently stable at their initial values:

- Lube oil mass flow rate
- Lube oil inlet temperature
- Lube oil outlet temperature
- Cooling water inlet temperature

Compared to their initial values, the current cooling water outlet temperature is _____; and the current cooling water mass flow rate is _____.

A. lower; smaller

B. lower; greater

C. higher; greater

D. higher; smaller

ANSWER: B.

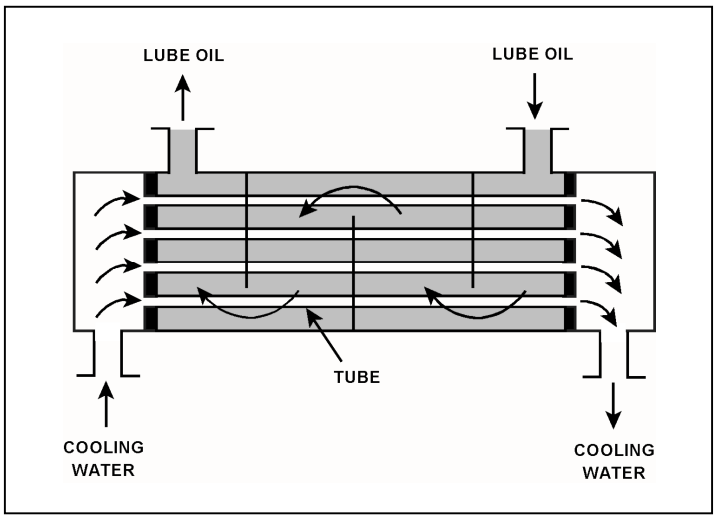

TOPIC: 291006
KNOWLEDGE: K1.16 [2.5/2.6]
QID: B156

The buildup of scale on heat-transfer surfaces in the reactor vessel...

A. results in lower fuel temperature, which decreases the nuclear fuel cycle efficiency.

B. is controlled by complying with core thermal limits and adhering to fuel preconditioning requirements.

C. is controlled by using reactor water cleanup system and condensate system demineralizers.

D. results in higher coolant temperature, which increases overall plant efficiency.

ANSWER: C.

TOPIC: 291006
KNOWLEDGE: K1.16 [2.5/2.6]
QID: B1136

Tube scaling in a parallel flow heat exchanger causes heat transfer rate to decrease because the...

A. surface area of the tubes decreases.

B. cooling fluid outlet temperature decreases.

C. thermal conductivity of the scale is very low.

D. flow through the heat exchanger becomes more turbulent.

ANSWER: C.

TOPIC: 291006
KNOWLEDGE: K1.16 [2.5/2.6]
QID: B1234 (P32)

Refer to the drawing of an operating lube oil heat exchanger (see figure below).

If scaling occurs inside the cooling water tubes, cooling water outlet temperature will _____; and lube oil outlet temperature will _____. (Assume the lube oil and cooling water flow rates do not change.)

A. decrease; decrease

B. decrease; increase

C. increase; decrease

D. increase; increase

ANSWER: B.

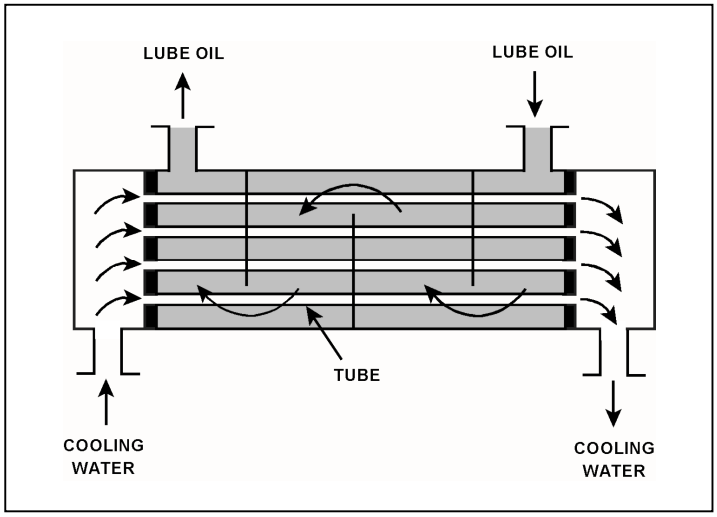

TOPIC: 291006
KNOWLEDGE: K1.16 [2.5/2.6]
QID: B1833 (P2233)

Refer to the drawing of an operating lube oil heat exchanger (see figure below).

If deposits accumulate on the outside of the cooling water tubes, cooling water outlet temperature will _____; and lube oil outlet temperature will _____. (Assume the lube oil and cooling water inlet temperatures and flow rates do not change.)

A. decrease; increase

B. decrease; decrease

C. increase; increase

D. increase; decrease

ANSWER: A.

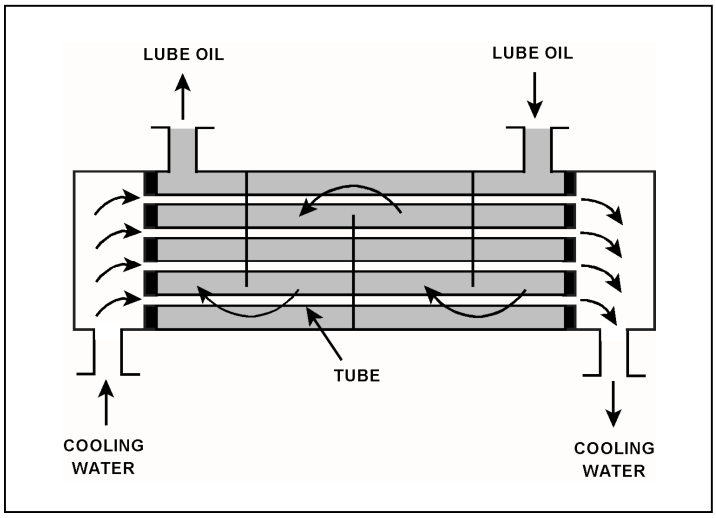

TOPIC: 291006
KNOWLEDGE: K1.16 [2.5/2.6]
QID: B6617 (P6616)

Refer to the drawing of an operating lube oil heat exchanger (see figure below).

If mineral deposits accumulate on the inside of the cooling water tubes, cooling water outlet temperature will _____; and lube oil outlet temperature will _____. (Assume the lube oil and cooling water inlet temperatures and flow rates do not change.)

A. increase; decrease

B. increase; increase

C. decrease; decrease

D. decrease; increase

ANSWER: D.

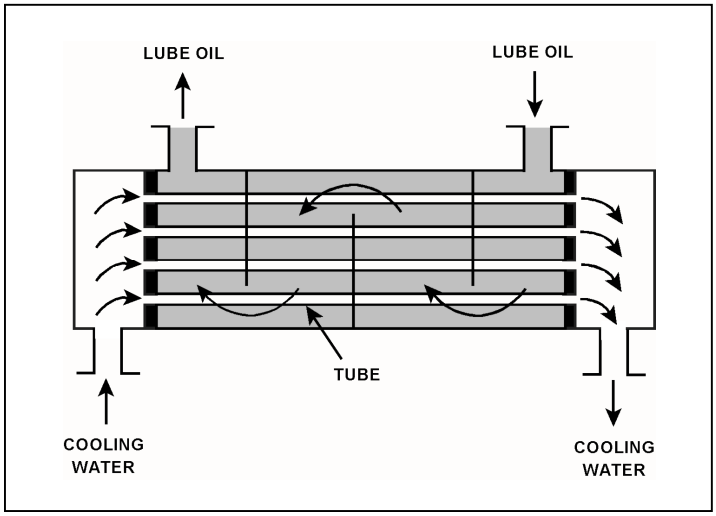

TOPIC: 291006
KNOWLEDGE: K1.17 [2.7/2.8]
QID: B234

Refer to the drawing of an operating cooling water system (see figure below) that is transferring heat between a low pressure (LP) and high pressure (HP) water system.

Which one of the following effects will initially occur as a result of a tube failure in the heat exchanger?

A. Level in the surge tank will increase.

B. HP fluid pump flow rate will decrease.

C. HP fluid heat exchanger differential temperature will increase.

D. LP fluid heat exchanger outlet temperature will increase.

ANSWER: D.

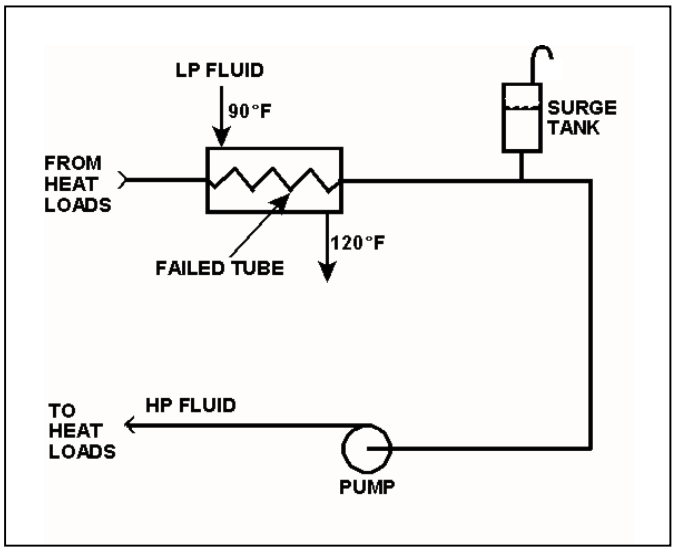

TOPIC: 291006
KNOWLEDGE: K1.17 [2.7/2.8]
QID: B332 (P331)

A nuclear power plant is operating at steady-state conditions with the main generator supplying 1,000 MW to the power grid. Assume main generator load remains constant.

If one percent of the tubes in the main condenser become plugged, condenser absolute pressure will _____; and condenser hotwell temperature will _____.

A. increase; increase

B. decrease; increase

C. increase; decrease

D. decrease; decrease

ANSWER: A.

TOPIC: 291006
KNOWLEDGE: K1.17 [2.7/2.8]
QID: B333 (P333)

A nuclear power plant is operating normally at 50 percent power. Which one of the following will result from a cooling water tube rupture in the main condenser?

A. Increased condenser vacuum.

B. Increased conductivity of the condensate.

C. Decreased condensate pump available net positive suction head.

D. Decreased condensate pump flow rate.

ANSWER: B.

TOPIC: 291006
KNOWLEDGE: K1.17 [2.7/2.8]
QID: B1535 (P1234)

Refer to the drawing of an operating cooling water system (see figure below).

Which one of the following will occur as a result of the indicated tube failure in the heat exchanger?

A. High pressure (HP) fluid inventory increases.

B. Pressure in the low pressure (LP) system decreases.

C. Temperature in the low pressure (LP) system increases.

D. Level in the surge tank decreases.

ANSWER: D.

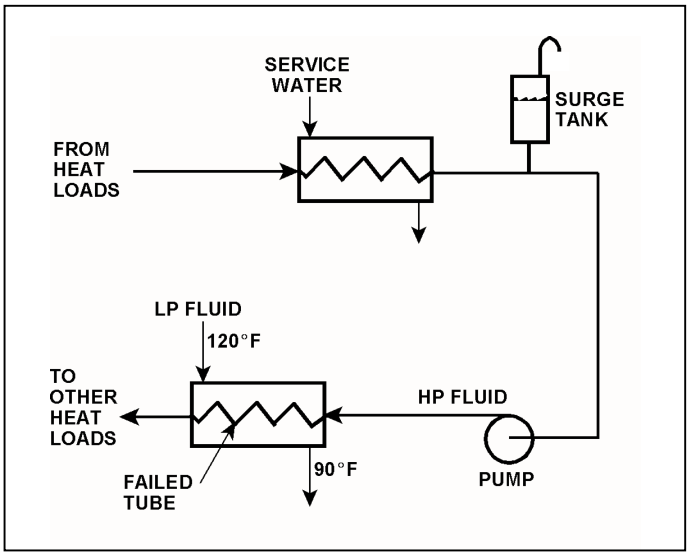

TOPIC: 291006
KNOWLEDGE: K1.17 [2.7/2.8]
QID: B1931 (P1134)

With a nuclear power plant operating at 50 percent power, which one of the following will occur as a result of multiple tube leaks in the main condenser? (Assume that main condenser vacuum does not change.)

A. Condensate depression will decrease.

B. Condensate conductivity will increase.

C. Condensate oxygen concentration will decrease.

D. Condenser inlet cooling water flow rate will decrease.

ANSWER: B.

TOPIC: 291006
KNOWLEDGE: K1.17 [2.7/2.8]
QID: B3535 (P234)

Refer to the drawing of an operating cooling water system (see figure below).

Which one of the following effects will occur because of the failed tube in the heat exchanger?

A. Level in the surge tank will increase.

B. Flow in the low pressure (LP) system will reverse.

C. Pressure in the low pressure (LP) system will decrease.

D. Low pressure (LP) fluid heat exchanger outlet temperature will decrease.

ANSWER: D.

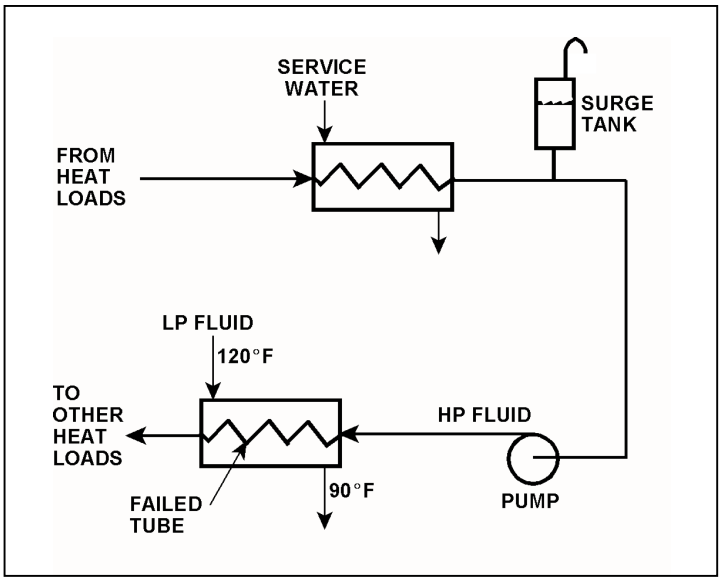

TOPIC: 291006
KNOWLEDGE: K1.17 [2.7/2.8]
QID: B4918 (P4917)

A nuclear power plant was initially operating at steady-state 50 percent power with 50 gpm of main condenser cooling water inleakage through a cooling water tube rupture. Power was then increased, and is currently stable at 60 percent.

Assume the size of the cooling water tube rupture does not change, and the main condenser cooling water inlet pressure and inlet temperature do not change.

When compared to the flow rate of main condenser cooling water inleakage at 50 percent power, the flow rate of cooling water inleakage at 60 percent power is _____ because the main condenser pressure at 60 percent power is _____.

A. higher; lower

B. higher; higher

C. lower; lower

D. lower; higher

ANSWER: D.

TOPIC: 291006
KNOWLEDGE: K1.18 [2.8/2.9]
QID: B936 (P1912)

During normal nuclear power plant operation, why does air entry into the main condenser reduce the thermodynamic efficiency of the steam cycle?

A. The rate of steam flow through the main turbine increases.

B. The condensate subcooling in the main condenser decreases.

C. The enthalpy of the low pressure turbine exhaust increases.

D. The air mixes with the steam and enters the condensate.

ANSWER: C.

TOPIC: 291006
KNOWLEDGE: K1.18 [2.8/2.9]
QID: B1236

During power plant operation, the accumulation of air and non-condensible gases in the main condenser will...

A. not affect turbine work output.

B. not affect turbine efficiency.

C. increase generator load.

D. increase turbine backpressure.

ANSWER: D.

TOPIC: 291006
KNOWLEDGE: K1.18 [2.9/3.0]
QID: B4018 (P4016)

Refer to the drawing of an operating lube oil heat exchanger (see figure below).

The heat exchanger is operating with the following initial parameters:

Cooling water inlet temperature ($T_{cw\text{-}in}$) = 75°F
Cooling water outlet temperature ($T_{cw\text{-}out}$) = 95°F
Oil inlet temperature ($T_{oil\text{-}in}$) = 150°F
Oil outlet temperature ($T_{oil\text{-}out}$) = 120°F

Air introduction to the heat exchanger results in some of the heat exchanger tubes becoming uncovered. As a result, $T_{cw\text{-}out}$ decreases to 91°F. Assume the inlet temperatures, mass flow rates, and specific heats of both fluids do <u>not</u> change.

Which one of the following will be the resulting temperature of the lube oil exiting the heat exchanger ($T_{oil\text{-}out}$)?

A. 126°F

B. 130°F

C. 134°F

D. 138°F

ANSWER: A.

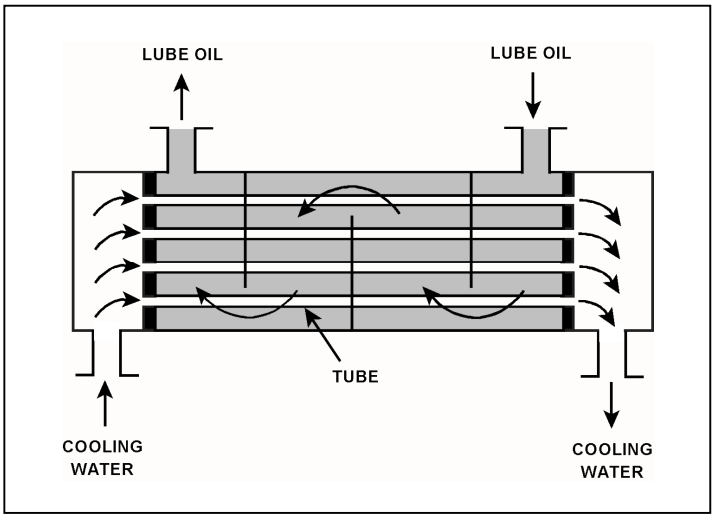

TOPIC: 291006
KNOWLEDGE: K1.18 [2.8/2.9]
QID: B4817 (P4816)

Refer to the drawing of an operating lube oil heat exchanger (see figure below).

The heat exchanger is operating with the following initial parameters:

Cooling water inlet temperature ($T_{cw\text{-}in}$) = 75°F
Cooling water outlet temperature ($T_{cw\text{-}out}$) = 95°F
Oil inlet temperature ($T_{oil\text{-}in}$) = 150°F
Oil outlet temperature ($T_{oil\text{-}out}$) = 110°F

Air leakage into the heat exchanger causes some of the heat exchanger tubes to become uncovered. As a result, $T_{cw\text{-}out}$ decreases to 89°F. Assume the inlet temperatures, mass flow rates, and specific heats of both fluids do <u>not</u> change.

Which one of the following will be the resulting temperature of the lube oil exiting the heat exchanger ($T_{oil\text{-}out}$)?

A. 116°F

B. 122°F

C. 130°F

D. 138°F

ANSWER: B.

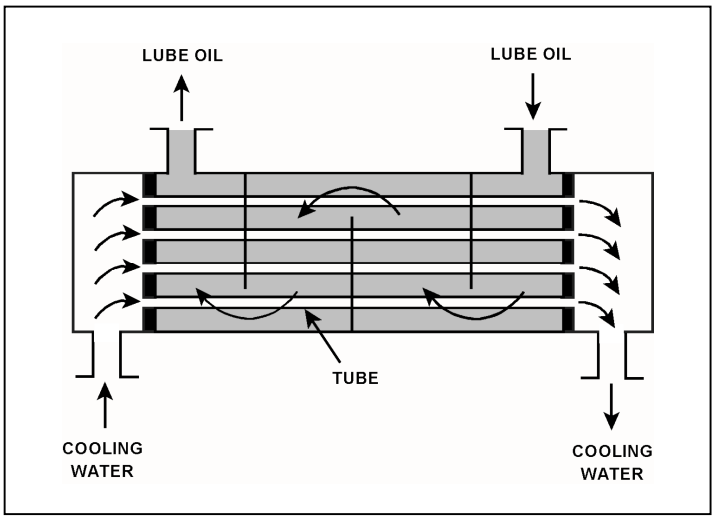

TOPIC: 291006
KNOWLEDGE: K1.18 [2.8/2.9]
QID: B5418 (P5417)

Refer to the drawing of an operating lube oil heat exchanger (see figure below).

The heat exchanger was operating with the following initial parameters:

Cooling water inlet temperature ($T_{cw\text{-}in}$) = 71°F
Cooling water outlet temperature ($T_{cw\text{-}out}$) = 91°F
Oil inlet temperature ($T_{oil\text{-}in}$) = 175°F
Oil outlet temperature ($T_{oil\text{-}out}$) = 125°F

The heat exchanger was vented, resulting in the following current parameters:

Cooling water inlet temperature ($T_{cw\text{-}in}$) = 71°F
Cooling water outlet temperature ($T_{cw\text{-}out}$) = 95°F
Oil inlet temperature ($T_{oil\text{-}in}$) = 175°F
Oil outlet temperature ($T_{oil\text{-}out}$) = ?

Assume that the mass flow rates and specific heats of both fluids were unchanged.

Which one of the following is the current lube oil outlet temperature ($T_{oil\text{-}out}$)?

A. 115°F

B. 120°F

C. 130°F

D. 135°F

ANSWER: A.

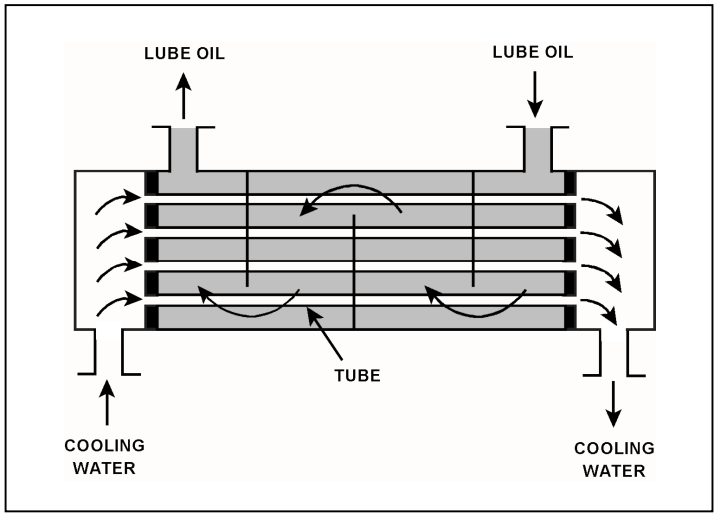

TOPIC: 291007
KNOWLEDGE: K1.01 [2.6/2.7]
QID: B637 (P2135)

High differential pressure in a demineralizer could be caused by all of the following except...

A. resin exhaustion.

B. resin overheating.

C. crud buildup.

D. high flow rate.

ANSWER: A.

TOPIC: 291007
KNOWLEDGE: K1.01 [2.6/2.7]
QID: B737 (P935)

A demineralizer is being used in a water purification system. How will the accumulation of suspended solids in the demineralizer affect the performance of the demineralizer?

A. The rate of resin depletion will increase.

B. The flow rate of water through the demineralizer will increase.

C. The differential pressure across the demineralizer will decrease.

D. The rate of unwanted ion removal from the system will decrease.

ANSWER: D.

TOPIC: 291007
KNOWLEDGE: K1.02 [2.8/2.9]
QID: B152 (P1835)

The ion exchange efficiency of a condensate demineralizer can be determined by...

A. sampling the inlet and outlet of the demineralizer to determine the change in conductivity.

B. performing a calculation based on the ratio between the inlet pH divided by the outlet pH.

C. sampling the inlet and outlet of the demineralizer to determine the difference in activity.

D. performing a calculation based on the change in differential pressure across the demineralizer.

ANSWER: A.

TOPIC: 291007
KNOWLEDGE: K1.02 [2.5/2.6]
QID: B839 (P835)

The decontamination factor for ionic impurities of a demineralizer can be expressed as...

A. Inlet Conductivity minus Outlet Conductivity.

B. Outlet Conductivity minus Inlet Conductivity.

C. Inlet Conductivity divided by Outlet Conductivity.

D. Outlet Conductivity divided by Inlet Conductivity.

ANSWER: C.

TOPIC: 291007
KNOWLEDGE: K1.02 [2.5/2.6]
QID: B1437 (P2236)

To determine the decontamination factor for ionic impurities of a demineralizer, the two parameters that must be monitored are inlet and outlet...

A. pH.

B. conductivity.

C. suspended solids.

D. pressure.

ANSWER: B.

TOPIC: 291007
KNOWLEDGE: K1.02 [2.5/2.6]
QID: B2737 (P2735)

What percentage of impurities is being removed from the water passing through an ion exchanger if the ion exchanger has a decontamination factor of 25?

A. 99 percent

B. 96 percent

C. 88 percent

D. 75 percent

ANSWER: B.

TOPIC: 291007
KNOWLEDGE: K1.02 [2.5/2.6]
QID: B2837 (P936)

The ion exchange efficiency of a condensate demineralizer is determined by performing a calculation using the...

A. change in conductivity at the outlet of the demineralizer over a period of time.

B. change in pH at the outlet of the demineralizer over a period of time.

C. demineralizer inlet and outlet conductivity.

D. demineralizer inlet and outlet pH.

ANSWER: C.

TOPIC: 291007
KNOWLEDGE: K1.02 [2.5/2.6]
QID: B3238 (P3235)

What percentage of ionic impurities is being removed from the water passing through an ion exchanger if the ion exchanger has a decontamination factor of 50?

A. 98 percent

B. 96 percent

C. 75 percent

D. 50 percent

ANSWER: A.

TOPIC: 291007
KNOWLEDGE: K1.02 [2.5/2.6]
QID: B3437 (P3435)

The decontamination factor of a condensate demineralizer has just been determined to be 50, based on conductivity measurements.

If condensate having a conductivity of 20 μmho/cm is flowing <u>into</u> this demineralizer, which one of the following is the conductivity of the condensate at the <u>outlet</u> of the demineralizer?

A. 0.4 μmho/cm

B. 1.0 μmho/cm

C. 4.0 μmho/cm

D. 10.0 μmho/cm

ANSWER: A.

TOPIC: 291007
KNOWLEDGE: K1.02 [2.5/2.6]
QID: B3637 (P3636)

The decontamination factor of a condensate demineralizer has just been determined to be 10, based on conductivity measurements.

If condensate having a conductivity of 20 μmho/cm is flowing <u>into</u> this demineralizer, which one of the following is the conductivity of the condensate at the <u>outlet</u> of the demineralizer?

A. 0.5 μmho/cm

B. 2.0 μmho/cm

C. 5.0 μmho/cm

D. 10.0 μmho/cm

ANSWER: B.

TOPIC: 291007
KNOWLEDGE: K1.02 [2.5/2.6]
QID: B4219 (P4219)

The decontamination factor of a condensate demineralizer has just been determined to be 5.0, based on conductivity measurements.

If condensate having a conductivity of 20 μmho/cm is flowing <u>into</u> this demineralizer, which one of the following is the conductivity of the condensate at the <u>outlet</u> of the demineralizer?

A. 0.4 μmho/cm

B. 4.0 μmho/cm

C. 10.0 μmho/cm

D. 100.0 μmho/cm

ANSWER: B.

TOPIC: 291007
KNOWLEDGE: K1.02 [2.5/2.6]
QID: B4719 (P4718)

What percentage of ionic impurities is being removed from the water passing through an ion exchanger if the ion exchanger has a decontamination factor of 1.0?

A. 100 percent

B. 99 percent

C. 1 percent

D. 0 percent

ANSWER: D.

TOPIC: 291007
KNOWLEDGE: K1.03 [2.8/2.9]
QID: B38

What adverse effect occurs due to channeling in a demineralizer?

A. Increased demineralizer outlet conductivity, because much of the resin is essentially bypassed.

B. Loss of resin, due to agitation resulting from increased fluid velocity through the demineralizer.

C. Resin dryout and cracking, because much of the resin is essentially bypassed.

D. Resin damage, due to the increased velocity of fluid through the demineralizer.

ANSWER: A.

TOPIC: 291007
KNOWLEDGE: K1.03 [2.5/2.6]
QID: B236

Channeling in a demineralizer is undesirable because the...

A. ability of the resin bed to remove undesirable ions will decrease and cause outlet conductivity to increase.

B. ability of the resin bed to remove suspended solids will decrease and cause outlet pH to increase.

C. resulting high velocity fluid flow will cause agitation of the resin beads and the release of unwanted ions.

D. resulting high velocity fluid flow can cause significant damage to resin retention elements.

ANSWER: A.

TOPIC: 291007
KNOWLEDGE: K1.03 [2.8/2.9]
QID: B838 (P1636)

Which one of the following, if processed through a demineralizer, will rapidly reduce the effectiveness of the demineralizer?

A. Oily water

B. Condensate

C. Makeup water

D. Radioactive water

ANSWER: A.

TOPIC: 291007
KNOWLEDGE: K1.03 [2.8/2.9]
QID: B1038

Which one of the following refers to the condition in which large portions of a demineralizer resin bed are bypassed, thereby allowing waterborne impurities to reach the outlet?

A. Channeling

B. Leaching

C. Exhaustion

D. Mineralization

ANSWER: A.

TOPIC: 291007
KNOWLEDGE: K1.03 [2.8/2.9]
QID: B1237 (P2035)

Which one of the following conditions may lead to channeling in an operating demineralizer?

A. Suspended solids forming a mat on the surface layer of the resin bed.

B. A sudden 10°F decrease in the temperature of the influent to the demineralizer.

C. Exhaustion of the resin bed due to high conductivity of the demineralizer influent.

D. Operation of the demineralizer with influent flow rate at 10 percent below design flow rate.

ANSWER: A.

TOPIC: 291007
KNOWLEDGE: K1.04 [2.8/2.9]
QID: B118

The purpose of a mixed-bed demineralizer is to...

A. increase the conductivity of water with little effect on pH.

B. decrease the conductivity of water with little effect on pH.

C. increase the pH of water by reducing the number of positively charged ions in it.

D. decrease the pH of water by increasing the number of negatively charged ions in it.

ANSWER: B.

TOPIC: 291007
KNOWLEDGE: K1.05 [2.4/2.5]
QID: B1138 (P1535)

A condensate demineralizer differential pressure (D/P) gauge indicates 4.0 psid at 50% flow rate. Over the next two days plant power changes have caused condensate flow rate to vary between 25% and 100%.

Which one of the following combinations of condensate flow rate and demineralizer D/P, observed during the power changes, indicates an increase in the accumulation of insoluble corrosion products in the demineralizer?

	Condensate Flow Rate	Demineralizer D/P (psid)
A.	100%	15.0
B.	75%	9.0
C.	60%	5.0
D.	25%	2.0

ANSWER: D.

TOPIC: 291007
KNOWLEDGE: K1.05 [2.4/2.5]
QID: B1539 (P1537)

A higher-than-expected differential pressure across an operating demineralizer can be caused by...

A. exhaustion of the cation exchange resin.

B. channeling through the resin bed.

C. insufficient resin backwash.

D. decreased demineralizer inlet conductivity.

ANSWER: C.

TOPIC: 291007
KNOWLEDGE: K1.05 [2.4/2.5]
QID: B1736 (P1736)

A condensate demineralizer differential pressure (D/P) gauge indicates 6.0 psid at 50% flow rate. Which one of the following combinations of condensate flow rate and demineralizer D/P observed at various power levels over the next few days indicates an increase in the accumulation of insoluble corrosion products in the demineralizer?

	Condensate Flow Rate	Demineralizer D/P (psid)
A.	100%	23.5
B.	75%	16.5
C.	60%	8.5
D.	25%	1.5

ANSWER: B.

TOPIC: 291007
KNOWLEDGE: K1.05 [2.4/2.5]
QID: B2237 (P635)

How does demineralizer differential pressure indicate the condition of a demineralizer resin bed?

A. Low differential pressure indicates flow blockage in the demineralizer.

B. Low differential pressure indicates that the demineralizer resin bed is exhausted.

C. High differential pressure indicates flow blockage in the demineralizer.

D. High differential pressure indicates that the demineralizer resin bed is exhausted.

ANSWER: C.

TOPIC: 291007
KNOWLEDGE: K1.05 [2.4/2.5]
QID: B2338 (P2335)

A condensate demineralizer differential pressure (D/P) gauge indicates 4.0 psid at 50% flow rate. Over the next two days plant power changes have caused condensate flow rate to vary between 25% and 100%.

Which one of the following combinations of condensate flow and demineralizer D/P, observed during the power changes, indicates an increase in the accumulation of insoluble corrosion products in the demineralizer?

	Condensate Flow Rate	Demineralizer D/P (psid)
A.	100%	15.0
B.	75%	9.0
C.	40%	3.0
D.	25%	1.0

ANSWER: C.

TOPIC: 291007
KNOWLEDGE: K1.05 [2.4/2.5]
QID: B2638 (P2235)

A condensate demineralizer differential pressure (D/P) gauge indicates 4.0 psid at 50% flow rate. Which one of the following combinations of condensate flow and demineralizer D/P observed at various power levels over the next few days indicates an increase in the accumulation of insoluble corrosion products in the demineralizer?

	Condensate Flow Rate	Demineralizer D/P (psid)
A.	25%	0.9
B.	60%	6.3
C.	75%	8.7
D.	100%	15.6

ANSWER: B.

TOPIC: 291007
KNOWLEDGE: K1.05 [2.4/2.5]
QID: B2938

A condensate demineralizer differential pressure (D/P) gauge indicates 9.0 psid at 50% flow. Over the next two days, plant power changes cause condensate flow to vary between 10% and 100%.

Which one of the following combinations of condensate flow and demineralizer D/P, if observed during the power changes, would indicate an increase in the accumulation of insoluble corrosion products in the demineralizer?

	Condensate Flow Rate	Demineralizer D/P (psid)
A.	10%	0.3
B.	25%	3.3
C.	75%	20.3
D.	100%	35.3

ANSWER: B.

TOPIC: 291007
KNOWLEDGE: K1.06 [2.7/2.7]
QID: B238

The temperature of the water passing through a demineralizer must be controlled because excessively hot water will...

A. increase the ion exchange rate for hydronium ions, thereby changing effluent pH.

B. degrade the corrosion inhibitor applied to the inner wall of the demineralizer.

C. result in excessive demineralizer retention element thermal expansion, thereby releasing resin.

D. reduce the affinity of the demineralizer resin for ion exchange.

ANSWER: D.

TOPIC: 291007
KNOWLEDGE: K1.06 [2.7/2.7]
QID: B438

There is a temperature limit on the water entering a demineralizer because excessively hot water will...

A. decompose the resin beads.

B. increase the potential for channeling.

C. cause the filter element to swell and release the resin.

D. dislodge and wash the resin fines off the filter element.

ANSWER: A.

TOPIC: 291007
KNOWLEDGE: K1.06 [2.7/2.7]
QID: B7685 (P7685)

A mixed-bed ion exchanger is being used to process reactor coolant. The ion exchanger has been in service for 6 months at 100 percent power. A temperature controller malfunction causes the ion exchanger influent temperature to exceed the resin's maximum temperature limit before being manually restored to normal. Ion exchanger water chemistry analyses are being performed to check for resin decomposition.

Which one of the following water chemistry test results would indicate that significant resin decomposition has occurred?

A. A significant decrease in the ion exchanger's effluent conductivity.

B. A significant increase in the ion exchanger's effluent radioactivity.

C. A significant increase in the ion exchanger's decontamination factor.

D. A significant increase in the ion exchanger's effluent dissolved gases.

ANSWER: B.

TOPIC: 291007
KNOWLEDGE: K1.07 [2.3/2.5]
QID: B938

The cation exchange resin in a mixed-bed demineralizer removes undesirable _____ ions from solution while releasing desirable _____ ions into solution.

A. negative; negative

B. negative; positive

C. positive; negative

D. positive; positive

ANSWER: D.

TOPIC: 291007
KNOWLEDGE: K1.07 [2.3/2.5]
QID: B1039

The anion exchange resin in a mixed-bed demineralizer releases desirable _____ ions into solution while removing undesirable _____ charged ions from solution.

A. hydroxide; negatively

B. hydroxide; positively

C. hydrogen; negatively

D. hydrogen; positively

ANSWER: A.

TOPIC: 291007
KNOWLEDGE: K1.07 [2.3/2.5]
QID: B1639

If a dilute sodium chloride water solution is passed through an ideal mixed-bed demineralizer, the effluent stream would consist of...

A. a sodium hydroxide solution.

B. a hydrogen chloride solution.

C. a sodium hypochlorite solution.

D. pure water.

ANSWER: D.

TOPIC: 291007
KNOWLEDGE: K1.07 [2.3/2.5]
QID: B1738

Which one of the following describes the process of backwashing a mixed-resin deep bed demineralizer?

A. Alternating the flow of dilute acidic and caustic solutions through the demineralizer to remove suspended solids and colloidal matter.

B. Alternating the flow of dilute acidic and caustic solutions through the demineralizer to remove ionic impurities.

C. Reversing the flow of pure water through the demineralizer to remove suspended solids and colloidal matter.

D. Reversing the flow of pure water through the demineralizer to remove ionic impurities.

ANSWER: C.

TOPIC: 291007
KNOWLEDGE: K1.07 [2.3/2.5]
QID: B1838 (P235)

When a mixed-bed demineralizer resin is exhausted, the resin should be replaced or regenerated because...

A. ions previously removed by the resin will be released into solution.

B. the resin will fracture and particles may escape through the retention screens.

C. particles previously filtered out of solution will be released.

D. the resin will physically bond together, thereby causing flow blockage.

ANSWER: A.

TOPIC: 291007
KNOWLEDGE: K1.07 [2.3/2.5]
QID: B2438

Which one of the following describes the process of regenerating a mixed-resin deep bed demineralizer? (Assume the demineralizer has already been backwashed.)

A. Alternating the flow of acidic and caustic solutions through the demineralizer to remove suspended solids and colloidal matter.

B. Alternating the flow of acidic and caustic solutions through the demineralizer to remove ionic impurities.

C. Reversing the flow of pure water through the demineralizer to remove suspended solids and colloidal matter.

D. Reversing the flow of pure water through the demineralizer to remove ionic impurities.

ANSWER: B.

TOPIC: 291007
KNOWLEDGE: K1.07 [2.3/2.5]
QID: B5419

Water is passing through an ion exchanger that contains only anion exchange resin. Currently, every available ion exchange site in the resin has exchanged its original anion and is occupied by a chloride (Cl^-) anion. Assuming that water temperature does not change, what will be the effect on the ion exchanger if a new anion impurity is introduced into the water entering the ion exchanger?

A. The new anions will bypass the occupied ion exchange sites under all circumstances.

B. The new anions will take the place of the Cl^- anions on the ion exchange sites under all circumstances.

C. The new anions will take the place of the Cl^- anions on the ion exchange sites only if the new anions have a greater negative charge than the Cl^- anions.

D. The new anions will take the place of the Cl^- anions on the ion exchange sites only if the new anions have a greater affinity for the anion exchange resin.

ANSWER: D.

TOPIC: 291007
KNOWLEDGE: K1.07 [2.3/2.5]
QID: B5720

If water containing positively charged ionic impurities passes through a mixed-bed ion exchanger, the positively charged ionic impurities will be removed by the _____ exchange resin, with the corresponding release of _____ ions into the water.

A. anion; negative

B. anion; positive

C. cation; negative

D. cation; positive

ANSWER: D.

TOPIC: 291007
KNOWLEDGE: K1.07 [2.3/2.5]
QID: B5820 (P5819)

During a nuclear power plant cooldown, the reactor experiences a large crud burst. After 10 minutes, with stable reactor coolant chemistry parameters, the operators begin to record parameters for the in-service reactor coolant purification ion exchanger. The ion exchanger was recently filled with fresh resin.

Assuming no additional operator actions, what trend will the recorded parameters show during the next few hours?

A. Increasing ion exchanger inlet water conductivity.

B. Increasing ion exchanger outlet water conductivity.

C. Increasing flow rate through the ion exchanger.

D. Increasing radiation levels around the ion exchanger.

ANSWER: D.

TOPIC: 291007
KNOWLEDGE: K1.07 [2.3/2.5]
QID: B6320 (P3537)

After 12 months of operation at 100 percent power, a reactor was shut down and a plant cooldown is in progress. An operator reports that the general area radiation level near the in-service reactor coolant ion exchanger has increased significantly since the cooldown began several hours ago.

Which one of the following is a typical cause of these indications, resulting from the cooldown?

A. Increased radioactive tritium in the reactor coolant.

B. Increased radioactive oxygen-16 dissolved in the reactor coolant.

C. Increased radioactive nitrogen-16 dissolved in the reactor coolant.

D. Increased radioactive corrosion products suspended in the reactor coolant.

ANSWER: D.

TOPIC: 291007
KNOWLEDGE: K1.07 [2.3/2.5]
QID: B6419

Water is passing through an ion exchanger that contains only cation exchange resin. Currently, every available ion exchange site in the resin has exchanged its original cation and is occupied by a sodium (Na^+) ion. Assuming that water temperature does not change, what will be the effect on the ion exchanger if a new cation impurity, other than Na^+, is introduced into the water entering the ion exchanger?

A. The new cations will bypass the occupied ion exchange sites under all circumstances.

B. The new cations will take the place of the Na^+ ions on the ion exchange sites under all circumstances.

C. The new cations will take the place of the Na^+ ions on the ion exchange sites only if the new cations have a greater positive charge than the Na^+ ions.

D. The new cations will take the place of the Na^+ ions on the ion exchange sites only if the resin has a greater affinity for the new cations.

ANSWER: D.

TOPIC: 291007
KNOWLEDGE: K1.07 [2.3/2.5]
QID: B6620

Water containing dissolved sodium (Na^+) and chloride (Cl^-) ionic impurities is passing through an ion exchanger that contains only anion exchange resin. How are the ionic impurities being affected as the water flows through the ion exchanger?

A. Sodium ions are being exchanged, but the chloride ions are unaffected.

B. Chloride ions are being exchanged, but the sodium ions are unaffected.

C. Sodium ions are being exchanged, and chloride ions are being removed by filtration.

D. Chloride ions are being exchanged, and sodium ions are being removed by filtration.

ANSWER: B.

TOPIC: 291007
KNOWLEDGE: K1.07 [2.3/2.5]
QID: B7220

Water containing dissolved sodium (Na^+) and chloride (Cl^-) ionic impurities is passing through an ion exchanger that contains only cation exchange resin. How are the ionic impurities being affected as the water flows through the ion exchanger?

A. Sodium ions are being exchanged, but the chloride ions are unaffected.

B. Chloride ions are being exchanged, but the sodium ions are unaffected.

C. Sodium ions are being exchanged, and chloride ions are being removed by filtration.

D. Chloride ions are being exchanged, and sodium ions are being removed by filtration.

ANSWER: A.

TOPIC: 291007
KNOWLEDGE: K1.07 [2.3/2.5]
QID: B7606 (P7606)

A mixed-bed ion exchanger is being used to process reactor coolant. The ion exchanger has been in service for 6 months at 100 percent power. A temperature controller malfunction causes the ion exchanger influent temperature to exceed the resin's maximum temperature limit before being manually restored to normal. Ion exchanger water chemistry analyses are being performed to check for resin decomposition.

Which one of the following water chemistry test results does not indicate that significant resin decomposition has occurred?

A. A significant decrease in the ion exchanger's decontaminator factor.

B. A significant increase in the ion exchanger's effluent conductivity.

C. A significant increase in the ion exchanger's effluent radioactivity.

D. A significant increase in the ion exchanger's effluent dissolved gases.

ANSWER: D.

TOPIC: 291007
KNOWLEDGE: K1.07 [2.3/2.5]
QID: B7656 (P7656)

Demineralizer 1A was removed from service after it became saturated with chloride ions while processing condensate with 10 times the normal chloride concentration. Replacement demineralizer 1B has restored the condensate chloride concentration to normal. Demineralizer 1A has not been processed in any way since being removed from service.

If demineralizer 1A is returned to service to replace demineralizer 1B, the downstream condensate system chloride concentration will...

A. remain the same, because demineralizer 1A resin has already been conditioned by previous operation.

B. remain the same, because demineralizer 1A resin can no longer remove chloride ions from the condensate.

C. increase, only due to the volume of water contained in demineralizer 1A mixing with the incoming condensate.

D. increase, due to both the volume of water contained in demineralizer 1A mixing with the incoming condensate and the release of chloride ions from the resin.

ANSWER: D.

TOPIC: 291007
KNOWLEDGE: K1.08 [2.6/2.6]
QID: B337 (P1836)

A fresh demineralizer that continuously processes water with a high concentration of suspended solids will first develop an increase in the...

A. conductivity at the demineralizer outlet.

B. decontamination factor of the demineralizer.

C. differential pressure across the demineralizer.

D. pH at the demineralizer outlet.

ANSWER: C.

TOPIC: 291007
KNOWLEDGE: K1.08 [2.6/2.6]
QID: B539 (P836)

A lower-than-expected differential pressure across a mixed-bed demineralizer is an indication of...

A. depletion of the resin.

B. channeling through the resin bed.

C. improper resin regeneration.

D. a decrease in inlet conductivity.

ANSWER: B.

TOPIC: 291007
KNOWLEDGE: K1.08 [2.6/2.6]
QID: B639 (P1036)

As the operating time of a demineralizer resin bed increases, the differential pressure across the bed...

A. increases due to depletion of the resin ion exchange sites.

B. increases due to trapping of suspended solids.

C. decreases due to gradual resin breakdown.

D. decreases due to erosion of the resin ion exchange sites.

ANSWER: B.

TOPIC: 291007
KNOWLEDGE: K1.08 [2.6/2.6]
QID: B7645 (P7645)

Which one of the following describes a possible cause and effect associated with a lower-than-normal differential pressure across a demineralizer during otherwise normal system flow conditions?

A. The resin has developed low resistance flow paths, which can decrease the decontamination factor for the demineralizer.

B. The resin has developed low resistance flow paths, which can increase the decontamination factor for the demineralizer.

C. The resin has become compacted, which can reduce the flow rate through the demineralizer and decrease the decontamination factor for the demineralizer.

D. The resin has become compacted, which can reduce the flow rate through the demineralizer and increase the decontamination factor for the demineralizer.

ANSWER: A.

TOPIC: 291007
KNOWLEDGE: K1.09 [2.7/2.7]
QID: B39 (P535)

Which one of the following is an indication of resin exhaustion in a demineralizer?

A. An increase in suspended solids in the effluent.

B. A decrease in the flow rate through the demineralizer.

C. An increase in the conductivity of the effluent.

D. An increase in the differential pressure across the demineralizer.

ANSWER: C.

TOPIC: 291007
KNOWLEDGE: K1.09 [2.7/2.7]
QID: B239 (P2637)

A result of proper demineralizer operation on water with ionic impurities is that the exiting water will always have a...

A. higher pH.

B. lower pH.

C. higher conductivity.

D. lower conductivity.

ANSWER: D.

TOPIC: 291008
KNOWLEDGE: K1.02 [3.4/3.5]
QID: B1141 (P5020)

Which one of the following describes the local overcurrent trip flag indicators for a breaker?

A. They actuate prior to breaker tripping to warn of imminent protective action.

B. They indicate breaker overcurrent trip actuation during and after breaker trip actuation.

C. When actuated, they indicate that the associated breaker has failed to trip open.

D. When actuated, they indicate that the breaker overcurrent trip relay has been reset.

ANSWER: B.

TOPIC: 291008
KNOWLEDGE: K1.02 [3.4/3.5]
QID: B1841 (P838)

Which one of the following describes the normal operation of a local breaker overcurrent trip flag indicator?

A. Actuates when no lockout is present; satisfies an electrical interlock to remotely close a breaker.

B. Actuates when a breaker overcurrent trip has occurred; can be manually reset when the overcurrent condition clears.

C. Actuates when a breaker has failed to trip on an overcurrent condition; can be manually reset when the overcurrent condition clears.

D. Actuates to cause a breaker trip when the overcurrent trip setpoint is reached; can be remotely reset when the overcurrent condition clears.

ANSWER: B.

TOPIC: 291008
KNOWLEDGE: K1.02 [3.4/3.5]
QID: B2240 (P1444)

Breaker local overcurrent trip flag indicators, when actuated, indicate that...

A. a breaker trip will occur unless current is reduced.

B. a breaker overcurrent condition is responsible for a breaker trip.

C. an overcurrent condition has cleared and the breaker can be closed.

D. the associated breaker has failed to trip open during an overcurrent condition.

ANSWER: B.

TOPIC: 291008
KNOWLEDGE: K1.02 [3.4/3.5]
QID: B3440 (P3444)

Given the following indications for an open 4,160 VAC breaker:

The local OPEN/CLOSED mechanical flag indicates OPEN.
A breaker overcurrent trip flag is actuated on one phase.
The line-side voltmeter indicates 4,160 VAC.
The load-side voltmeter indicates 0 VAC.

Assuming no operator actions were taken since the breaker opened, which one of the following could have caused the breaker to open?

A. A ground fault caused an automatic breaker trip.

B. A loss of control power caused an automatic breaker trip.

C. An operator opened the breaker locally.

D. An operator opened the breaker from a remote location.

ANSWER: A.

TOPIC: 291008
KNOWLEDGE: K1.02 [3.4/3.5]
QID: B4121 (P4120)

Given the following indications for an open 4,160 VAC breaker:

All phase overcurrent trip flags are reset.
The control power fuses indicate blown.
The line-side voltmeter indicates 4,160 VAC.
The load-side voltmeter indicates 0 VAC.

Assuming no operator actions were taken since the breaker opened, which one of the following could have caused the breaker to open?

A. A ground fault caused an automatic breaker trip.

B. A loss of control power caused an automatic breaker trip.

C. An operator tripped the breaker manually at the breaker cabinet.

D. An operator tripped the breaker manually from a remote location.

ANSWER: C.

TOPIC: 291008
KNOWLEDGE: K1.03 [3.3/3.4]
QID: B40 (P338)

Which one of the following will cause a loss of indication from the remote breaker position indicating lights associated with a typical 480 VAC load supply breaker?

A. Locally opening the breaker.

B. Loss of breaker line voltage.

C. Removing the breaker control power fuses.

D. Burnout of the local breaker position indicating lights.

ANSWER: C.

TOPIC: 291008
KNOWLEDGE: K1.03 [3.3/3.4]
QID: B339

The following remote indications are observed for a 480 VAC load supply breaker. (The breaker is normally open.)

Red indicating light is on.
Green indicating light is off.
Load voltage indicates 0 VAC.
Line voltage indicates 480 VAC.

What is the condition of the breaker?

A. Open and racked in

B. Closed and racked in

C. Open and racked to the TEST position

D. Closed and racked to the TEST position

ANSWER: D.

TOPIC: 291008
KNOWLEDGE: K1.03 [3.3/3.4]
QID: B1440 (P1438)

While remotely investigating the condition of a normally-open breaker that feeds a motor control center (MCC), an operator observes the following indications:

Green breaker position indicating light is out.
Red breaker position indicating light is lit.
MCC voltmeter indicates normal voltage.
MCC ammeter indicates zero amperes.

Based on these indications, the operator should report that the breaker is _____ and racked _____.

A. open; in

B. closed; in

C. open; out

D. closed; out

ANSWER: B.

TOPIC: 291008
KNOWLEDGE: K1.03 [3.3/3.4]
QID: B1640

While remotely investigating the condition of a typical normally open motor control center (MCC) feeder breaker, an operator observes the following indications:

Green breaker position indicating light is out.
Red breaker position indicating light is lit.
MCC voltmeter indicates zero volts.
MCC ammeter indicates zero amperes.

Based on these indications, the operator can accurately report that the breaker is _____ and racked _____.

A. open; out

B. closed; out

C. open; to the TEST position

D. closed; to the TEST position

ANSWER: D.

TOPIC: 291008
KNOWLEDGE: K1.03 [3.3/3.4]
QID: B2143 (P1838)

While remotely investigating the condition of a typical normally-open motor control center (MCC) feeder breaker, an operator observes the following indications:

Green breaker position indicating light is lit.
Red breaker position indicating light is out.
MCC voltmeter indicates zero volts.
MCC ammeter indicates zero amperes.

Based on these indications, the operator can accurately report that the breaker is open and racked to _____ position.

A. the OUT

B. the IN

C. the TEST

D. an unknown

ANSWER: D.

TOPIC: 291008
KNOWLEDGE: K1.03 [3.3/3.4]
QID: B2640 (P1932)

While remotely investigating the condition of a normally-open 480 VAC motor control center (MCC) feeder breaker, an operator observes the following indications:

Green breaker position indicating light is out.
Red breaker position indicating light is lit.
MCC voltmeter indicates 480 VAC.
MCC ammeter indicates zero amperes.

Based on these indications, the operator should report that the feeder breaker is _____ and racked _____.

A. open; in

B. closed; in

C. open; to the TEST position

D. closed; to the TEST position

ANSWER: B.

TOPIC: 291008
KNOWLEDGE: K1.03 [3.3/3.4]
QID: B2842 (P1140)

The following indications are observed in the control room for a normally open breaker that directly starts/stops a 480 VAC motor:

Red position indicating light is on.
Green position indicating light is off.
Load current indicates 50 amps.
Supply voltage indicates 480 VAC.

What is the condition of the breaker?

A. Open and racked to TEST position

B. Closed and racked to TEST position

C. Open and racked in

D. Closed and racked in

ANSWER: D.

TOPIC: 291008
KNOWLEDGE: K1.03 [3.3/3.4]
QID: B6021 (P6022)

While remotely investigating the condition of a normally-open feeder breaker to a 480 VAC motor control center (MCC), a control room operator observes the following indications:

Green breaker position indicating light is out.
Red breaker position indicating light is lit.
MCC voltmeter indicates 0 VAC.
MCC ammeter indicates zero amperes.

Based on these indications, the operator should report that the feeder breaker is _____ and racked _____.

A. open; in

B. closed; out

C. open; to the TEST position

D. closed; to the TEST position

ANSWER: D.

TOPIC: 291008
KNOWLEDGE: K1.03 [3.3/3.4]
QID: B7221 (P7222)

While remotely investigating the condition of a normally-open 480 VAC motor control center (MCC) feeder breaker, an operator observes the following indications:

Green breaker position indicating light is out.
Red breaker position indicating light is lit.
MCC voltmeter indicates 480 VAC.
MCC ammeter indicates zero amperes.

Based on these indications, the operator should report that the feeder breaker is _____ and racked _____.

A. open; in

B. closed; in

C. open; to an unknown position

D. closed; to an unknown position

ANSWER: B.

TOPIC: 291008
KNOWLEDGE: K1.04 [3.3/3.3]
QID: B840 (P840)

A typical 120 VAC manual circuit breaker tripped due to overload. To close this circuit breaker, the handle must be moved from the...

A. OFF position directly to the ON position; trip latch reset is not required.

B. midposition directly to the ON position; trip latch reset is not required.

C. OFF position to the midposition to reset the trip latch, and then to the ON position.

D. midposition to the OFF position to reset the trip latch, and then to the ON position.

ANSWER: D.

TOPIC: 291008
KNOWLEDGE: K1.05 [3.0/3.1]
QID: B41

Which one of the following describes the operation of a thermal overload device for a large motor?

A. A temperature sensor monitors the temperature of the operating equipment and completes a circuit to trip the breaker if the temperature setpoint is exceeded.

B. A balanced bridge circuit compares actual current to a fixed overcurrent setpoint and completes a circuit to trip the breaker if the current setpoint is exceeded.

C. A heater element in series with the motor heats up in proportion to the motor current and completes a circuit to trip the breaker if a high current condition persists.

D. An induction coil in series with the motor generates a secondary current proportional to the primary current and completes a circuit to trip the breaker if a high current condition persists.

ANSWER: C.

TOPIC: 291008
KNOWLEDGE: K1.05 [3.0/3.1]
QID: B340 (P344)

A thermal overload device for a large motor protects the motor from...

A. sustained overcurrent by opening the motor breaker or motor line contacts.

B. sustained overcurrent by opening contacts in the motor windings.

C. instantaneous overcurrent by opening the motor breaker or motor line contacts.

D. instantaneous overcurrent by opening contacts in the motor windings.

ANSWER: A.

TOPIC: 291008
KNOWLEDGE: K1.05 [3.0/3.1]
QID: B2242 (P2644)

Thermal overload devices will provide the first electrical protection for a pump motor in the event of...

A. a locked rotor upon starting.

B. an electrical short circuit.

C. gradual motor bearing damage.

D. a sheared shaft during operation.

ANSWER: C.

TOPIC: 291008
KNOWLEDGE: K1.05 [3.0/3.1]
QID: B2641 (P528)

Which one of the following will provide the first motor protection against electrical damage caused by gradual bearing degradation?

A. Thermal overload device

B. Overcurrent trip relay

C. Underfrequency relay

D. Undervoltage device

ANSWER: A.

TOPIC: 291008
KNOWLEDGE: K1.06 [3.2/3.6]
QID: B116 (P640)

Refer to the drawing of a valve motor control circuit (see figure below).

One purpose of the K3 relay is to...

A. hold the valve open after one or both initiating conditions have cleared, even if the reset pushbutton (S1) is depressed.

B. hold the valve open even if one or both initiating conditions have cleared.

C. close the valve as soon as either initiating condition has cleared.

D. close the valve as soon as both initiating conditions have cleared.

ANSWER: B.

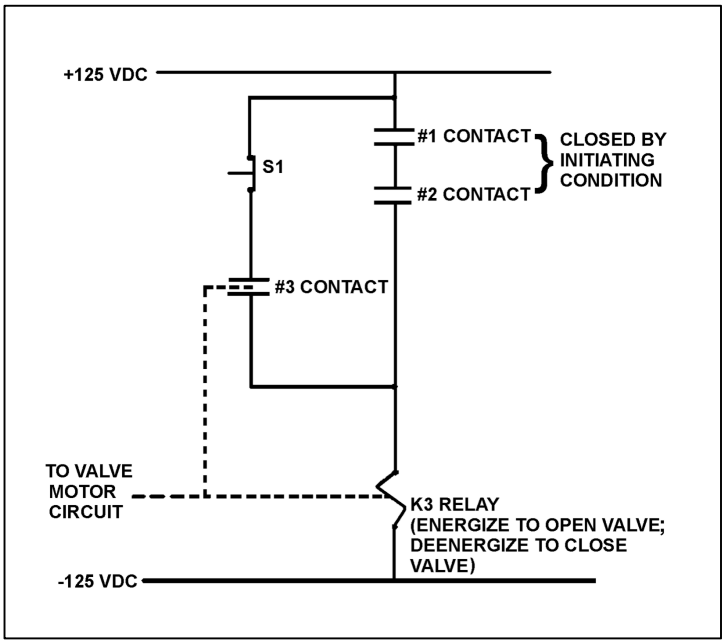

TOPIC: 291008
KNOWLEDGE: K1.06 [3.2/3.6]
QID: B541 (P540)

Refer to the drawing of a valve motor control circuit (see figure below).

What is the purpose of depressing the S1 pushbutton?

A. To deenergize the K3 relay after the initiating condition has cleared.

B. To prevent energizing the K3 relay when the initiating condition occurs.

C. To manually energize the K3 relay in the absence of the initiating condition.

D. To maintain the K3 relay energized after the initiating condition has cleared.

ANSWER: A.

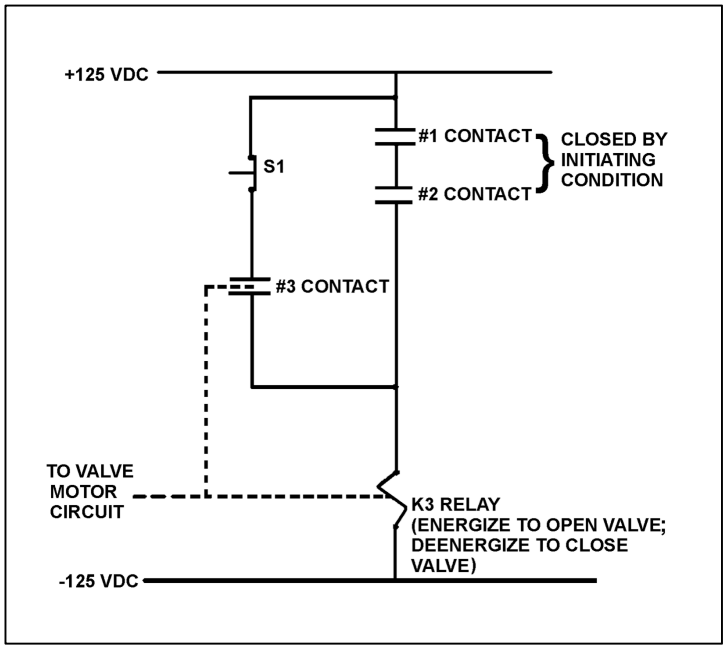

TOPIC: 291008
KNOWLEDGE: K1.06 [3.2/3.6]
QID: B742 (P742)

Refer to the drawing of a valve motor control circuit (see figure below).

The valve is currently open with the contact configuration as shown. If the S1 pushbutton is depressed, the valve will _____; and when the S1 pushbutton is subsequently released, the valve will _____.

A. remain open; remain open

B. close; remain closed

C. remain open; close

D. close; open

ANSWER: B.

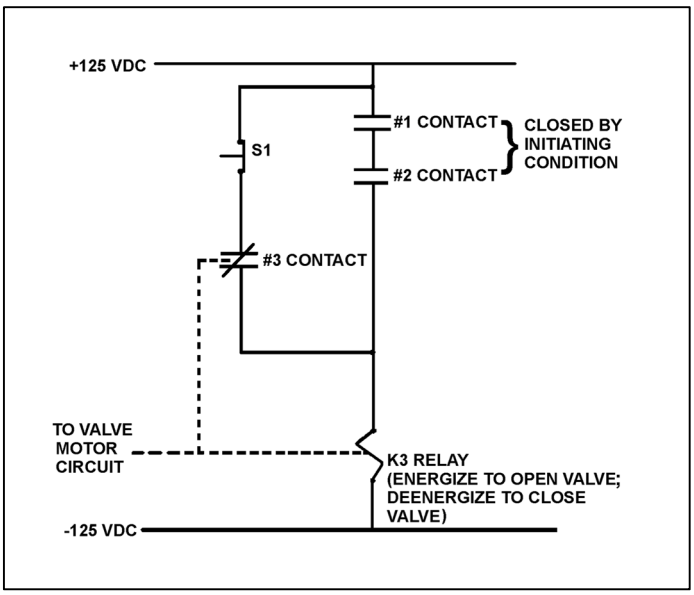

TOPIC: 291008
KNOWLEDGE: K1.06 [3.2/3.6]
QID: B942 (P941)

Refer to the drawing of a valve motor control circuit (see figure below).

Which one of the following describes the function of the #3 contact?

A. To keep the K3 relay energized after the initiating condition clears.

B. To provide a method for manually energizing the K3 relay.

C. To increase circuit reliability because any one of the three contacts can energize the K3 relay.

D. To ensure the K3 relay can always be deenergized even with the initiating condition present.

ANSWER: A.

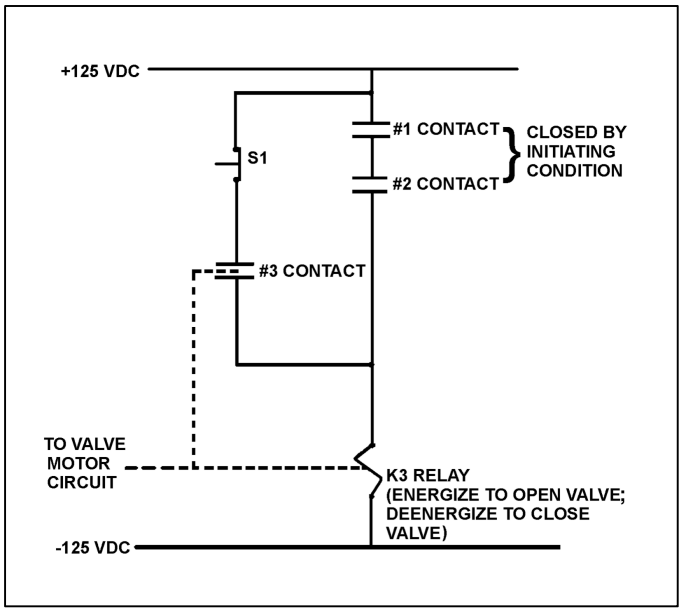

TOPIC: 291008
KNOWLEDGE: K1.06 [3.2/3.6]
QID: B1042 (P1040)

Refer to the drawing of a valve motor control circuit (see figure below).

The initiating condition occurs and closes the #1 and #2 contacts to energize the K3 relay and open the valve. Which one of the following will close the valve?

A. Loss of 125 VDC.

B. Both #1 and #2 contacts open.

C. Either #1 or #2 contact opens.

D. Depressing the S1 pushbutton with the initiating condition present.

ANSWER: A.

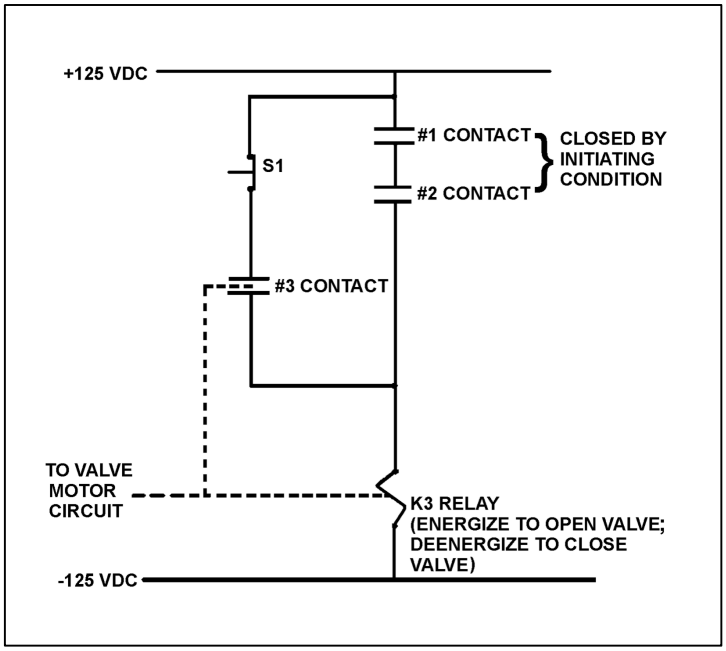

TOPIC: 291008
KNOWLEDGE: K1.06 [3.2/3.6]
QID: B1341 (P1340)

Refer to the drawing of a valve motor control circuit for a valve that is currently fully closed (see figure below).

Note: Limit switch (LS) contacts are shown open regardless of valve position, but relay contacts are shown open/closed according to the standard convention for control circuit drawings.

Which one of the following describes when the motor-operated valve will begin to stroke open?

A. At the same time the alarm actuates.

B. 10 seconds after PB2 is depressed.

C. Immediately after PB2 is depressed.

D. Immediately after PB1 is depressed if contact #1 is closed.

ANSWER: C.

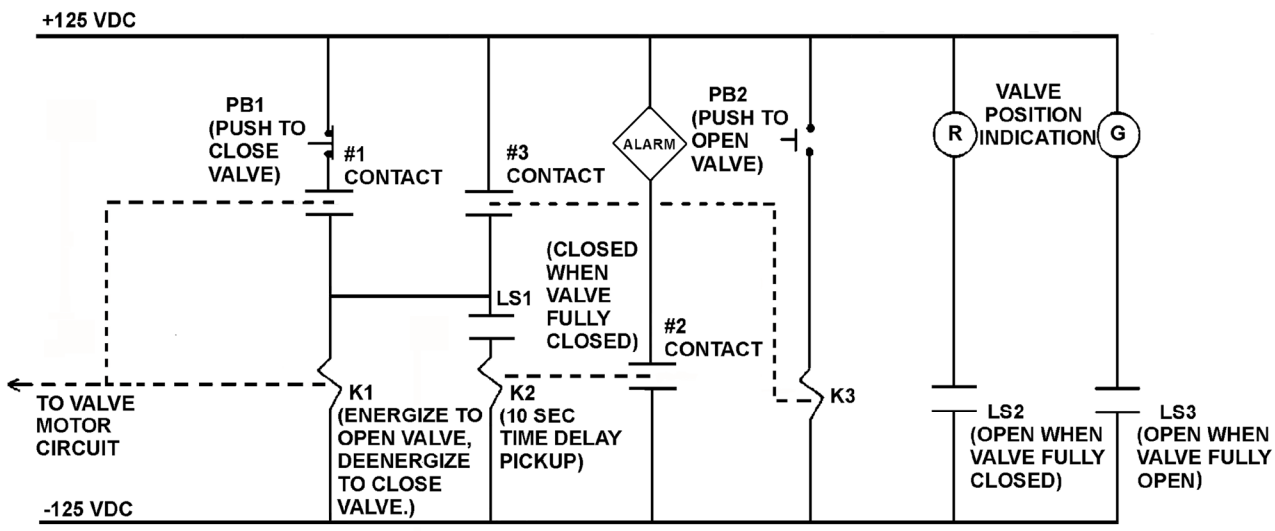

VALVE MOTOR CONTROL CIRCUIT

TOPIC: 291008
KNOWLEDGE: K1.06 [3.2/3.6]
QID: B1441 (P1440)

Refer to the drawing of a valve motor control circuit (see figure below).

Pushbutton PB2 was depressed to open the valve, and the current contact and pushbutton status is as shown with the following exceptions:

LS1 is closed.
LS3 is closed.
#1 contact is closed.
#2 contact is closed.

Which one of the following describes the condition of the valve and its control circuit?

A. The valve is closed and the valve motor circuit has just been energized to open the valve.

B. The valve is closed and an open demand signal has existed for at least 10 seconds.

C. The valve is partially open and the valve motor circuit is deenergized because PB2 was prematurely released.

D. The valve is partially open and an open demand signal has existed for at least 10 seconds.

ANSWER: B.

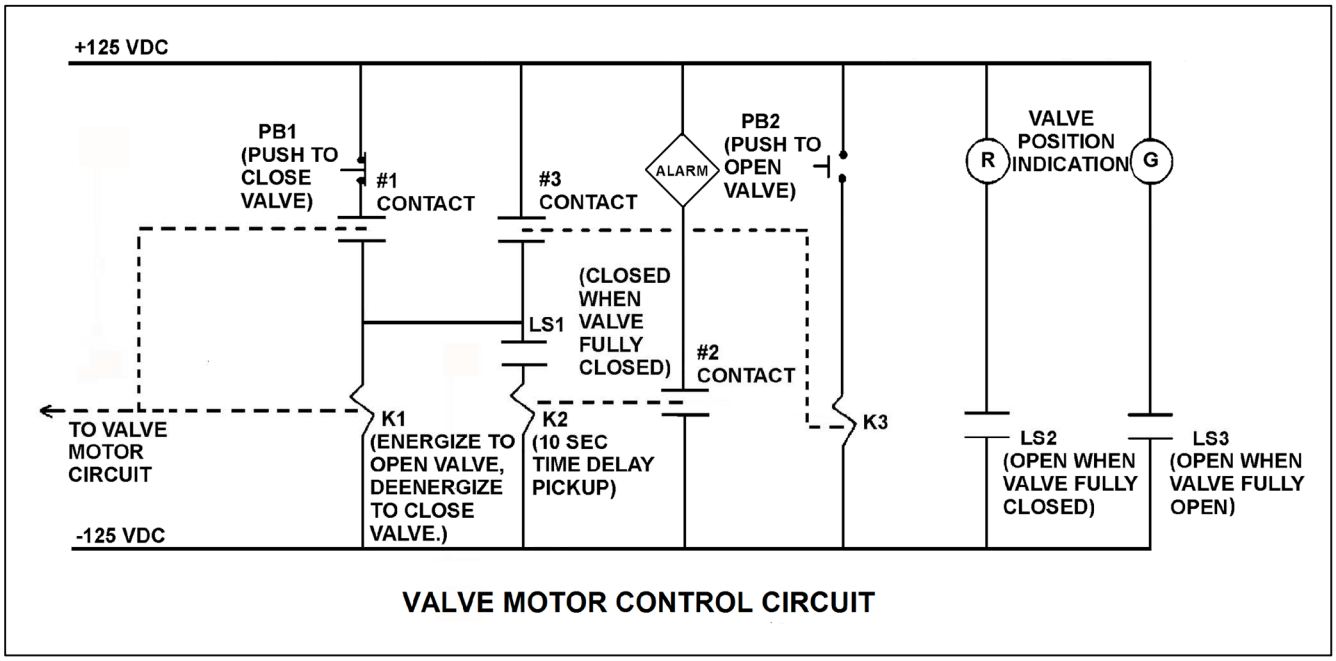

VALVE MOTOR CONTROL CIRCUIT

TOPIC: 291008
KNOWLEDGE: K1.06 [3.2/3.6]
QID: B1542 (P1540)

Refer to the drawing of a valve motor control circuit (see figure below).

Note: Limit switch (LS) contacts are shown open regardless of valve position, but relay contacts are shown open/closed according to the standard convention for control circuit drawings.

Which one of the following describes the purpose of the alarm?

A. Alert the operator when the valve motor circuit has been energized for 10 seconds after pushbutton PB2 is depressed.

B. Alert the operator when the valve has not moved off its closed seat within 10 seconds of depressing pushbutton PB2.

C. Alert the operator that the valve is opening by sounding the alarm for 10 seconds after PB2 is depressed.

D. Alert the operator if the valve has not reached full open within 10 seconds of depressing pushbutton PB2.

ANSWER: B.

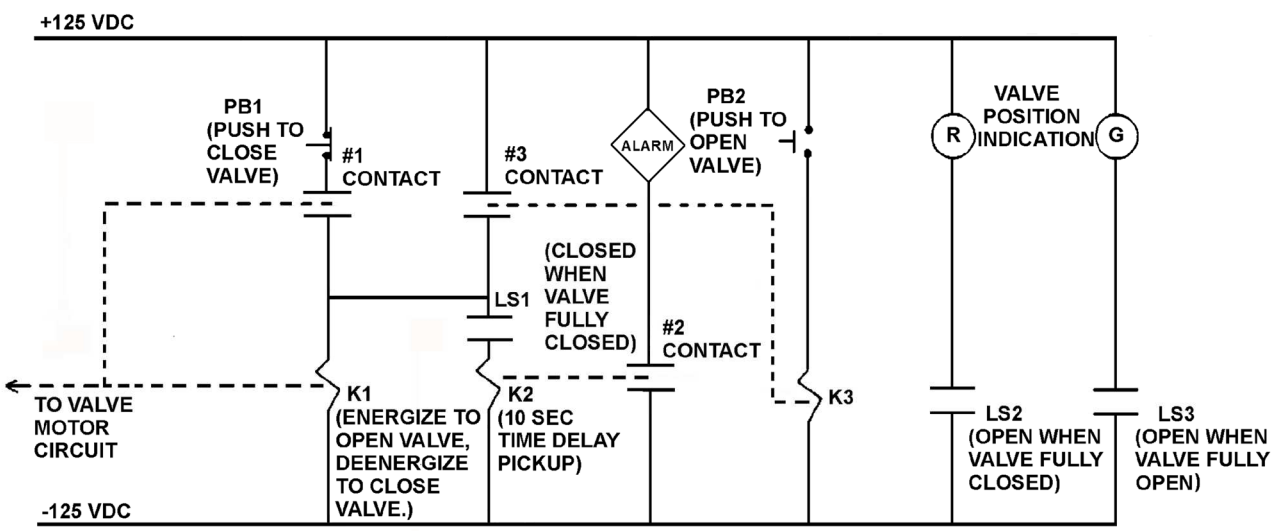

VALVE MOTOR CONTROL CIRCUIT

TOPIC: 291008
KNOWLEDGE: K1.06 [3.2/3.6]
QID: B1644 (P1640)

Refer to the drawing of a valve motor control circuit (see figure below).

Note: Limit switch (LS) contacts are shown open regardless of valve position, but relay contacts are shown open/closed according to the standard convention for control circuit drawings.

The valve is half open and moving to the open position. Which one of the following describes the current condition of the valve position indicating lights?

A. Red light on, green light on

B. Red light on, green light off

C. Red light off, green light on

D. Red light off, green light off

ANSWER: A.

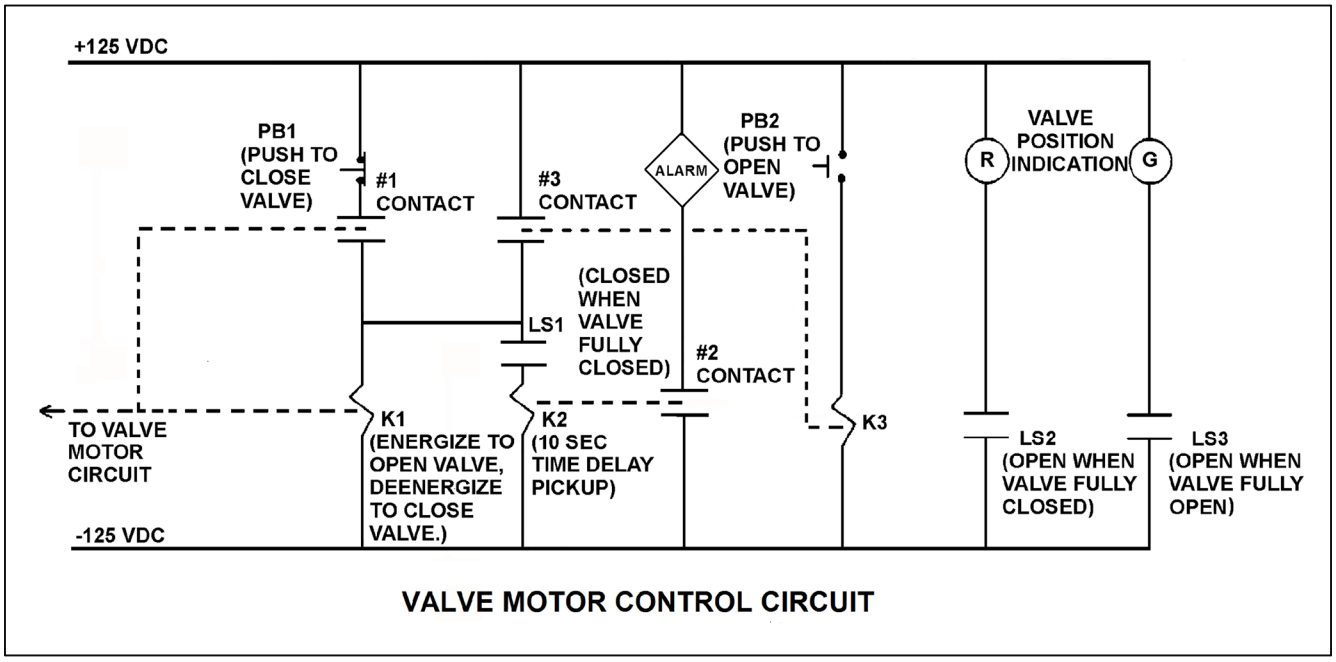

VALVE MOTOR CONTROL CIRCUIT

TOPIC: 291008
KNOWLEDGE: K1.06 [3.2/3.6]
QID: B1742 (P1739)

Refer to the drawing of a valve motor control circuit (see figure below).

Note: Limit switch (LS) contacts are shown open regardless of valve position, but relay contacts are shown open/closed according to the standard convention for control circuit drawings.

Pushbutton PB2 has been momentarily depressed and then released, and the valve is currently at mid-stroke and moving to the open position. Under these conditions, which one of the following describes the position of contacts #1, #2, and #3?

A. #1 closed; #2 open; #3 open

B. #1 open; #2 closed; #3 closed

C. #1 open; #2 closed; #3 open

D. #1 closed; #2 open; #3 closed

ANSWER: A.

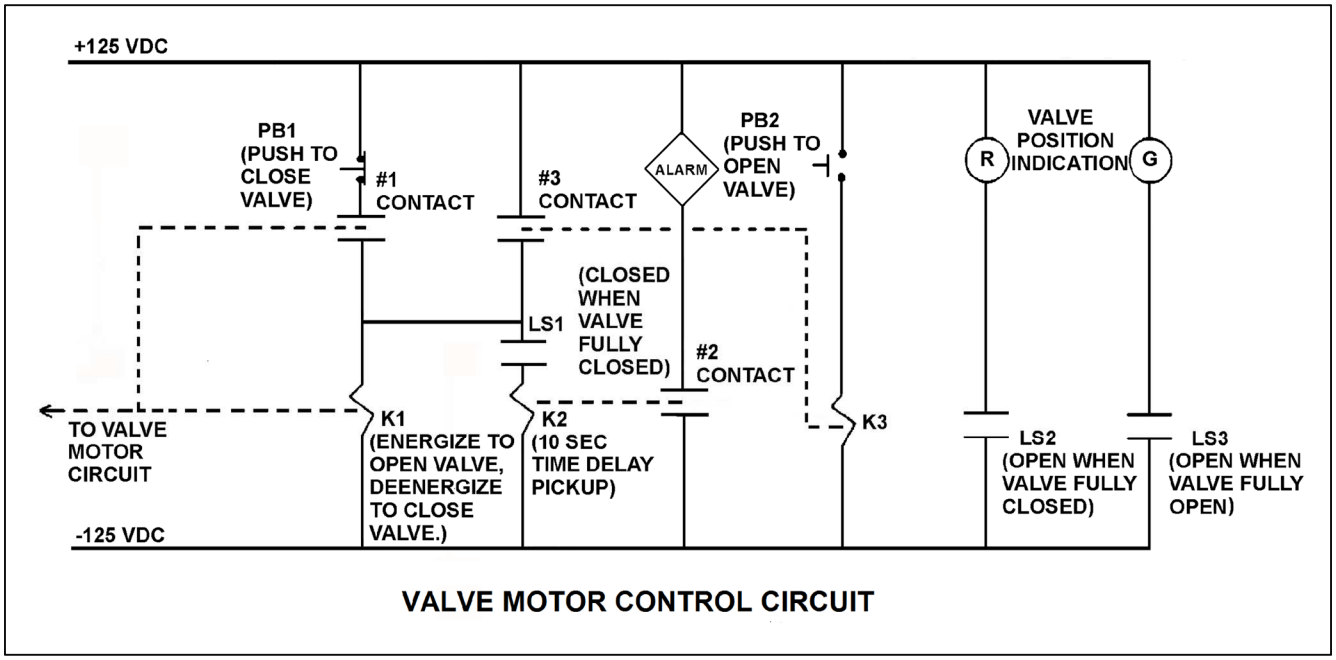

VALVE MOTOR CONTROL CIRCUIT

TOPIC: 291008
KNOWLEDGE: K1.06 [3.2/3.6]
QID: B2341 (P2239)

Refer to the drawing of a valve motor control circuit (see figure below) for a valve that is currently fully open and has a 10-second stroke time.

Note: Limit switch (LS) contacts are shown open regardless of valve position, but relay contacts are shown open/closed according to the standard convention for control circuit drawings.

Which one of the following describes the valve response if the control switch is taken to the CLOSE position for two seconds and then released?

A. The valve will not move.

B. The valve will close fully.

C. The valve will begin to close and then stop moving.

D. The valve will begin to close and then open fully.

ANSWER: C.

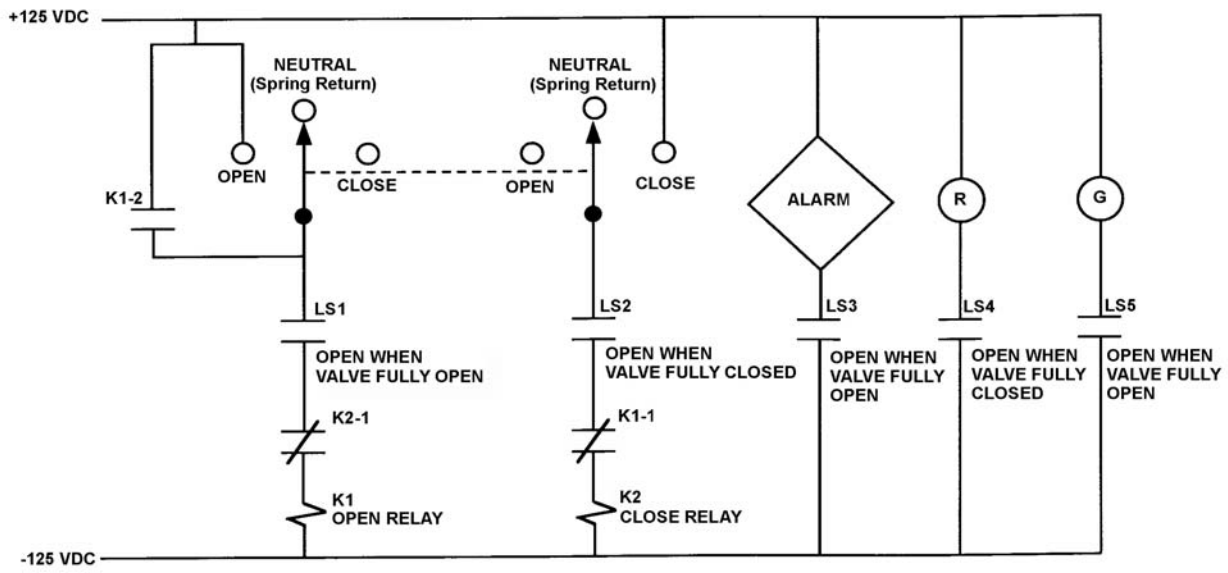

VALVE MOTOR CONTROL CIRCUIT

TOPIC: 291008
KNOWLEDGE: K1.06 [3.2/3.6]
QID: B2442 (P2341)

Refer to the drawing of a valve motor control circuit (see figure below) for a valve that is currently fully closed and has a 10-second stroke time.

Note: Limit switch (LS) contacts are shown open regardless of valve position, but relay contacts are shown open/closed according to the standard convention for control circuit drawings.

Which one of the following describes the valve response if the control switch is taken to the OPEN position for two seconds and then released?

A. The valve will not move.

B. The valve will open fully.

C. The valve will begin to open and then stop moving.

D. The valve will begin to open and then close fully.

ANSWER: B.

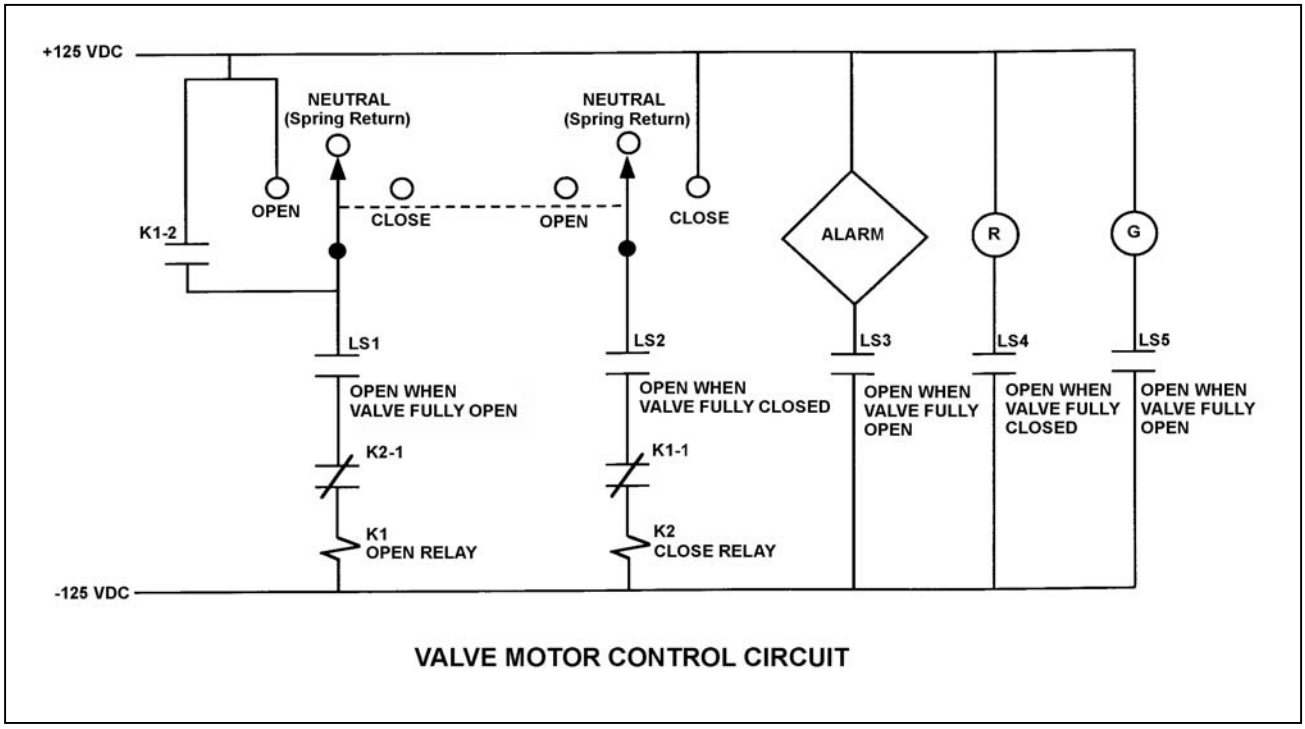

VALVE MOTOR CONTROL CIRCUIT

TOPIC: 291008
KNOWLEDGE: K1.06 [3.2/3.6]
QID: B2542 (P2539)

Refer to the drawing of a valve motor control circuit (see figure below) for a valve that is currently fully open and has a 10-second stroke time. Limit switch LS2 has failed open.

Note: Limit switch (LS) contacts are shown open regardless of valve position, but relay contacts are shown open/closed according to the standard convention for control circuit drawings.

Which one of the following describes the valve response if the control switch is taken to the CLOSE position for 2 seconds and then released?

A. The valve will not move.

B. The valve will close fully.

C. The valve will begin to close and then stop moving.

D. The valve will begin to close and then open fully.

ANSWER: A.

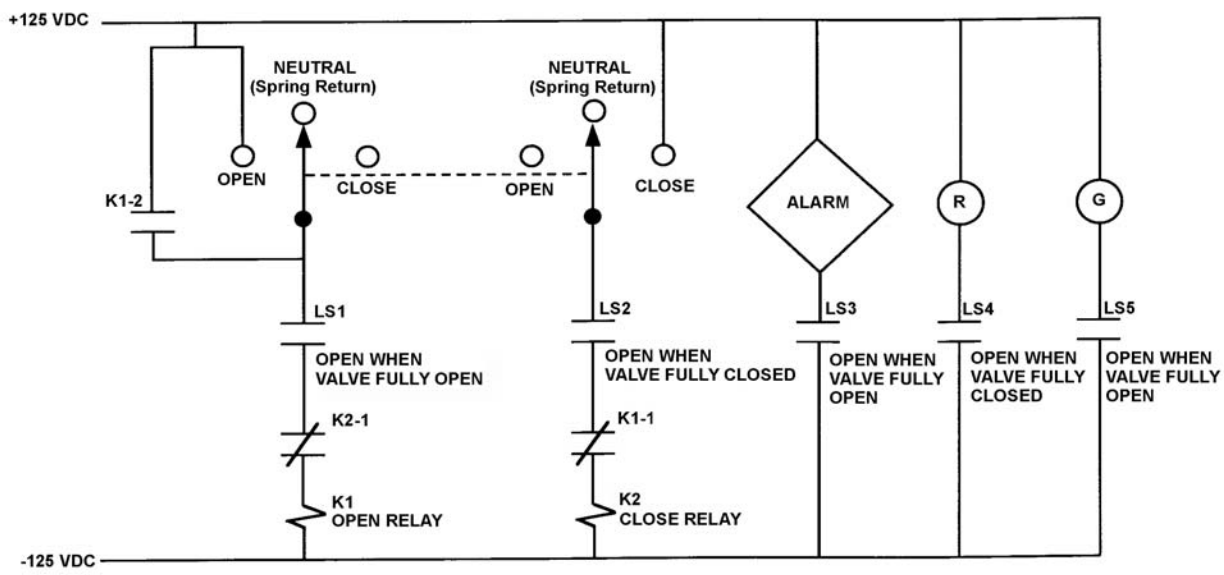

VALVE MOTOR CONTROL CIRCUIT

TOPIC: 291008
KNOWLEDGE: K1.06 [3.2/3.6]
QID: B2741 (P2739)

Refer to the drawing of a valve motor control circuit (see figure below) for a valve that is currently fully closed and has a 10-second stroke time.

Note: Limit switch (LS) contacts are shown open regardless of valve position, but relay contacts are shown open/closed according to the standard convention for control circuit drawings.

An operator takes the control switch to OPEN momentarily and the valve begins to open. Five seconds later, the operator places and holds the switch in the CLOSE position. Which one of the following describes the valve response with the switch held in the CLOSE position?

A. The valve will stop opening and remain partially open.

B. The valve will stop opening and then go fully closed.

C. The valve will open fully and remain fully open.

D. The valve will open fully and then go fully closed.

ANSWER: D.

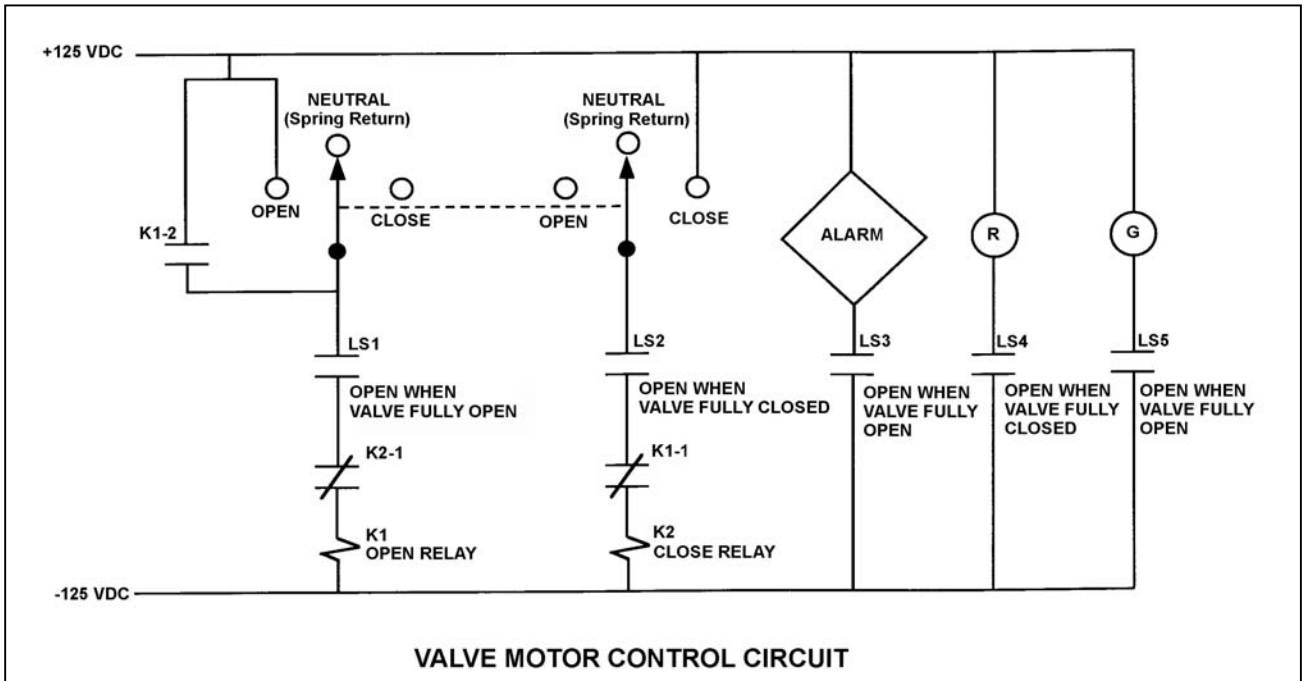

VALVE MOTOR CONTROL CIRCUIT

TOPIC: 291008
KNOWLEDGE: K1.06 [3.2/3.6]
QID: B2841 (P2640)

Refer to the drawing of a valve motor control circuit (see figure below) for a valve that is currently fully closed and has a 10-second stroke time.

Note: Limit switch (LS) contacts are shown open regardless of valve position, but relay contacts are shown open/closed according to the standard convention for control circuit drawings.

The operator takes the control switch to OPEN momentarily and the valve begins to open. Five seconds later, the operator takes the switch to CLOSE momentarily and then releases the switch. Which one of the following describes the valve response after the switch is released?

A. The valve will stop opening and remain partially open.

B. The valve will stop opening and then go fully closed.

C. The valve will open fully and remain fully open.

D. The valve will open fully and then go fully closed.

ANSWER: C.

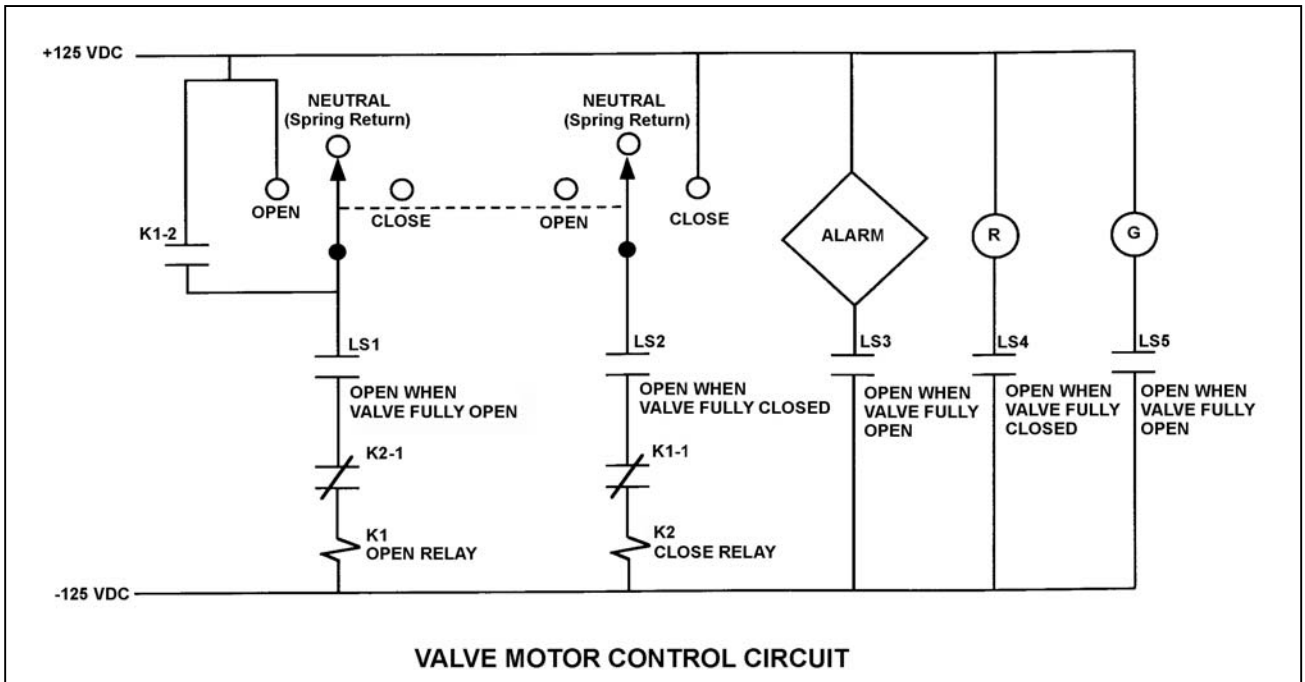

VALVE MOTOR CONTROL CIRCUIT

TOPIC: 291008
KNOWLEDGE: K1.06 [3.2/3.6]
QID: B2940 (P2942)

Refer to the drawing of a motor and its control circuit (see figure below).

Note: Relay contacts are shown open/closed according to the standard convention for control circuit drawings.

What is the purpose of the Time Delay Coil (TD) in the motor controller circuit?

A. Ensures the motor cannot be started until the overload relays are reset.

B. Ensures the motor cannot be started until the accelerating coil is energized.

C. Allows the motor to come up to speed before bypassing the starting resistors.

D. Allows the motor to come up to speed before placing the starting resistors in the circuit.

ANSWER: C.

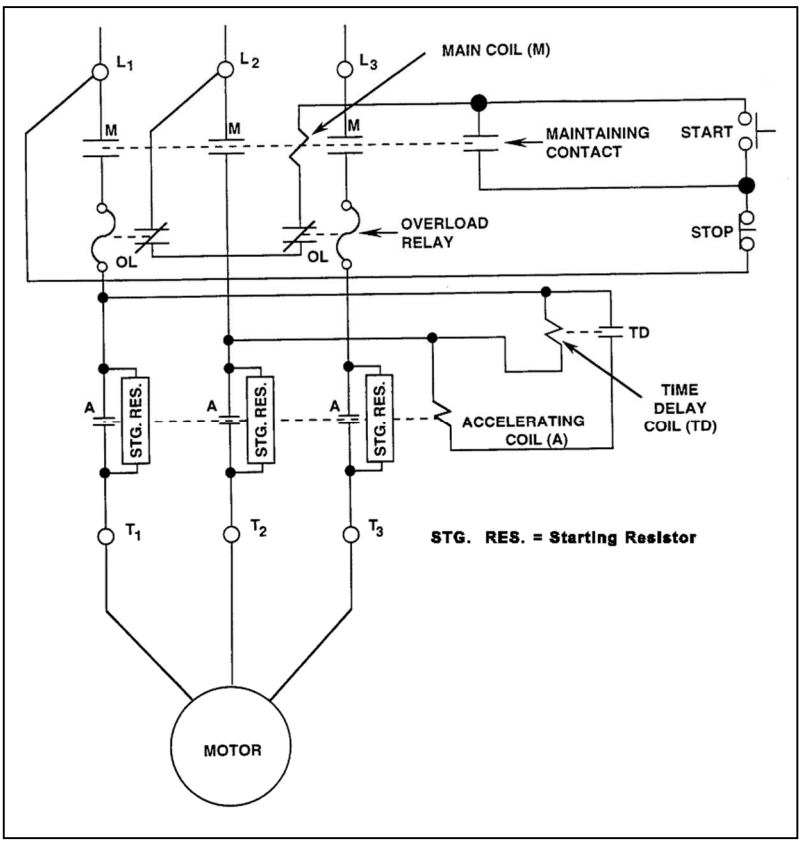

TOPIC: 291008
KNOWLEDGE: K1.06 [3.2/3.6]
QID: B3641 (P3640)

Refer to the drawing of a motor and its control circuit (see figure below).

Note: Relay contacts are shown open/closed according to the standard convention for control circuit drawings.

The motor receives overload protection from _____ overload relays; and _____ overload relay(s) must actuate to deenergize the motor.

A. two; one

B. two; two

C. three; one

D. three; two

ANSWER: A.

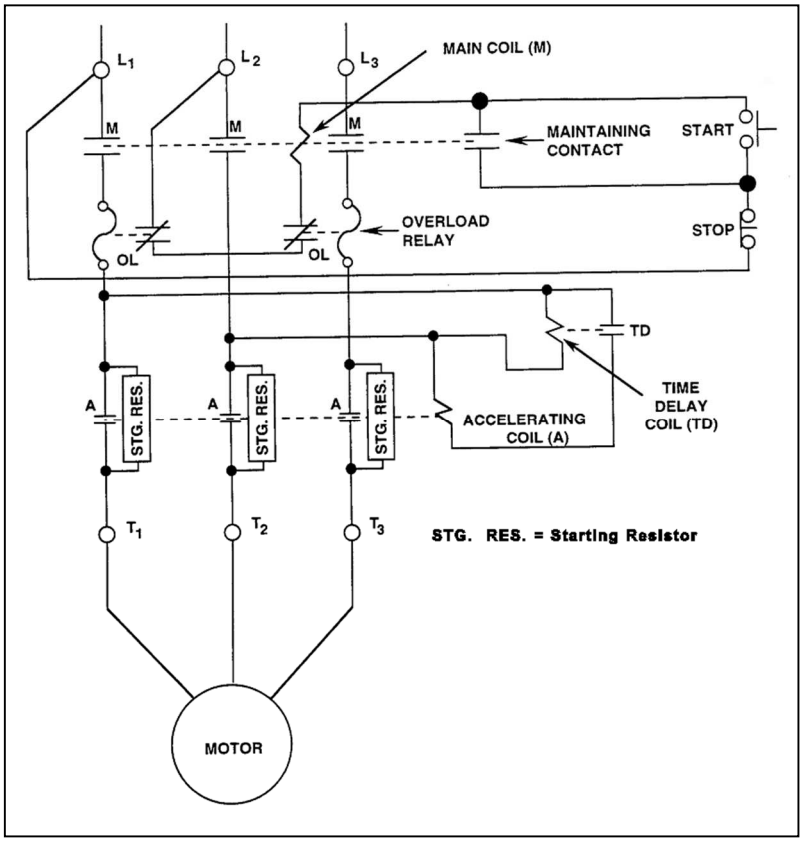

TOPIC: 291008
KNOWLEDGE: K1.06 [3.2/3.6]
QID: B3921 (P3921)

Refer to the drawing of a valve motor control circuit (see figure below) for a valve that is currently fully closed and has a 10-second stroke time.

Note: Limit switch (LS) contacts are shown open regardless of valve position, but relay contacts are shown open/closed according to the standard convention for control circuit drawings.

The operator takes the control switch to OPEN for 5 seconds and then releases the switch. After one minute, the operator takes the control switch to CLOSE for 5 seconds and then releases the switch. Which one of the following describes the valve position immediately after the control switch is released the second time?

A. Approximately fully open.

B. Approximately fully closed.

C. Approximately 50 percent open.

D. Cannot be determined without additional information.

ANSWER: B.

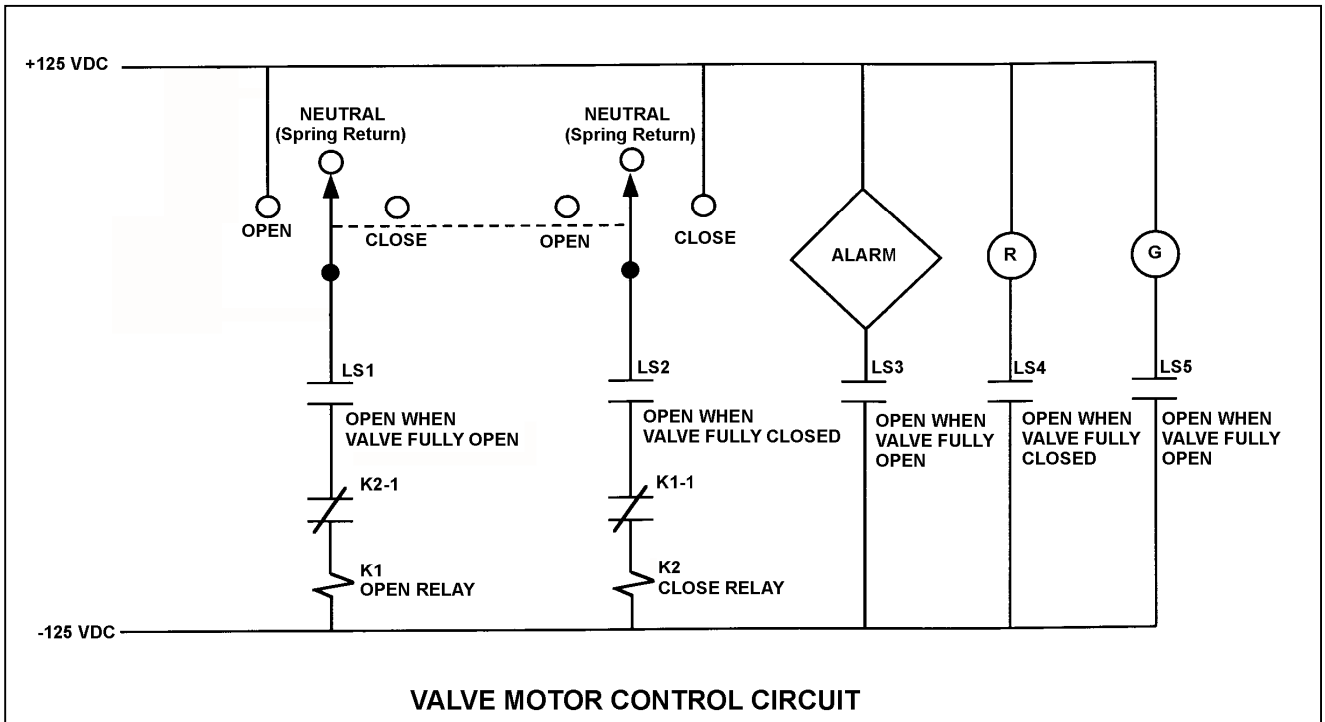

VALVE MOTOR CONTROL CIRCUIT

TOPIC: 291008
KNOWLEDGE: K1.06 [3.2/3.6]
QID: B4221 (P4221)

Refer to the drawing of a motor and its control circuit (see figure below).

Note: Relay contacts are shown open/closed according to the standard convention for control circuit drawings.

How are the starting resistors employed before and after the motor is energized?

A. Inserted before the motor is energized; simultaneously bypassed after the motor gains speed.

B. Inserted before the motor is energized; sequentially bypassed as the motor gains speed.

C. Bypassed before the motor is energized; simultaneously inserted after the motor gains speed.

D. Bypassed before the motor is energized; sequentially inserted as the motor gains speed.

ANSWER: A.

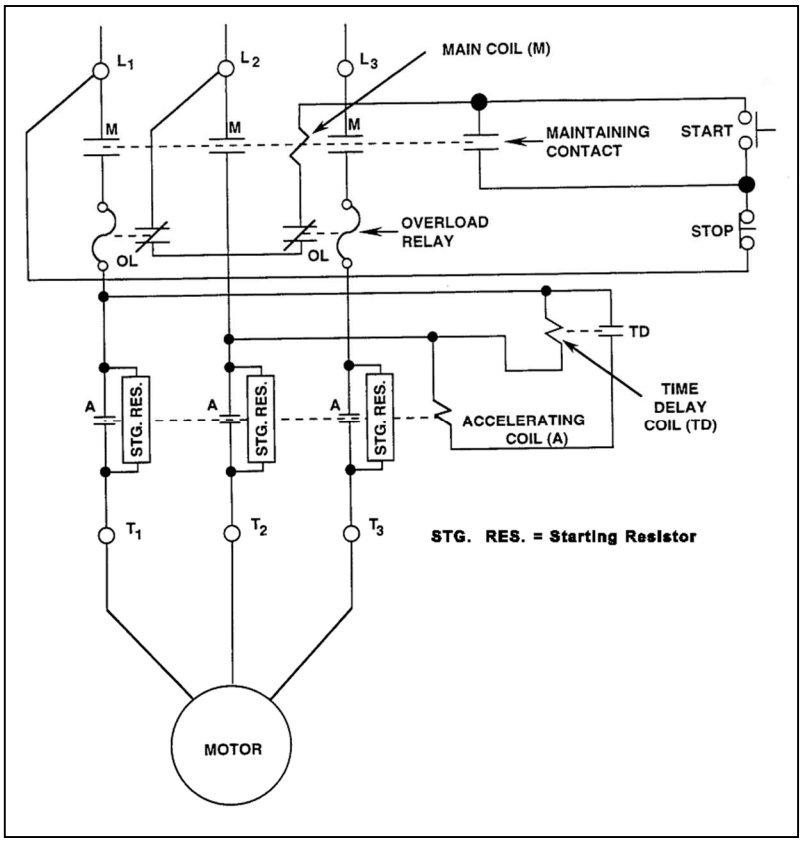

TOPIC: 291008
KNOWLEDGE: K1.06 [3.2/3.6]
QID: B4421 (P4421)

Refer to the drawing of a motor and its control circuit (see figure below).

Note: Relay contacts are shown open/closed according to the standard convention for control circuit drawings.

The motor has been operating for several hours when it is decided to stop the motor. What is the status of the starting resistors before and after the motor STOP pushbutton is depressed?

A. Initially inserted in the motor circuit; bypassed immediately after the STOP pushbutton is depressed.

B. Initially inserted in the motor circuit; bypassed following a preset time delay after the STOP pushbutton is depressed.

C. Initially bypassed; bypass is removed immediately after the STOP pushbutton is depressed.

D. Initially bypassed; bypass is removed following a preset time delay after the STOP pushbutton is depressed.

ANSWER: C.

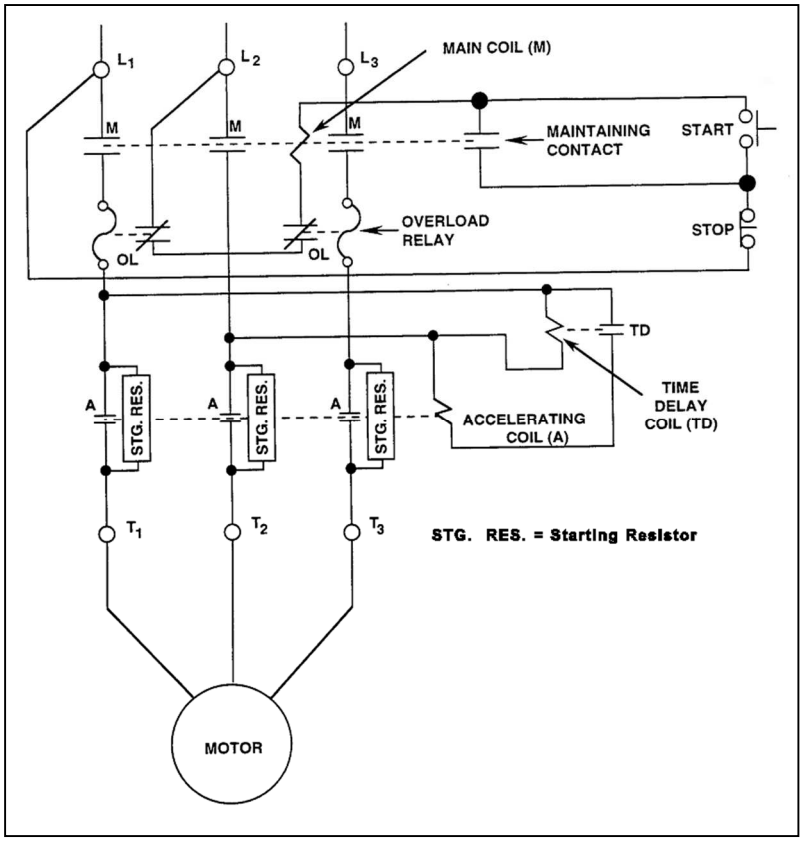

TOPIC: 291008
KNOWLEDGE: K1.06 [3.2/3.6]
QID: B4521 (P4521)

Refer to the drawing of a valve motor control circuit (see figure below) for a valve that is currently fully closed and has a 10-second stroke time.

Note: Limit switch (LS) contacts are shown open regardless of valve position, but relay contacts are shown open/closed according to the standard convention for control circuit drawings.

Which one of the following describes the valve response if the control switch is taken to the OPEN position for two seconds and then released?

A. The valve will not move.

B. The valve will open fully.

C. The valve will begin to open and then stop moving.

D. The valve will begin to open and then close fully.

ANSWER: C.

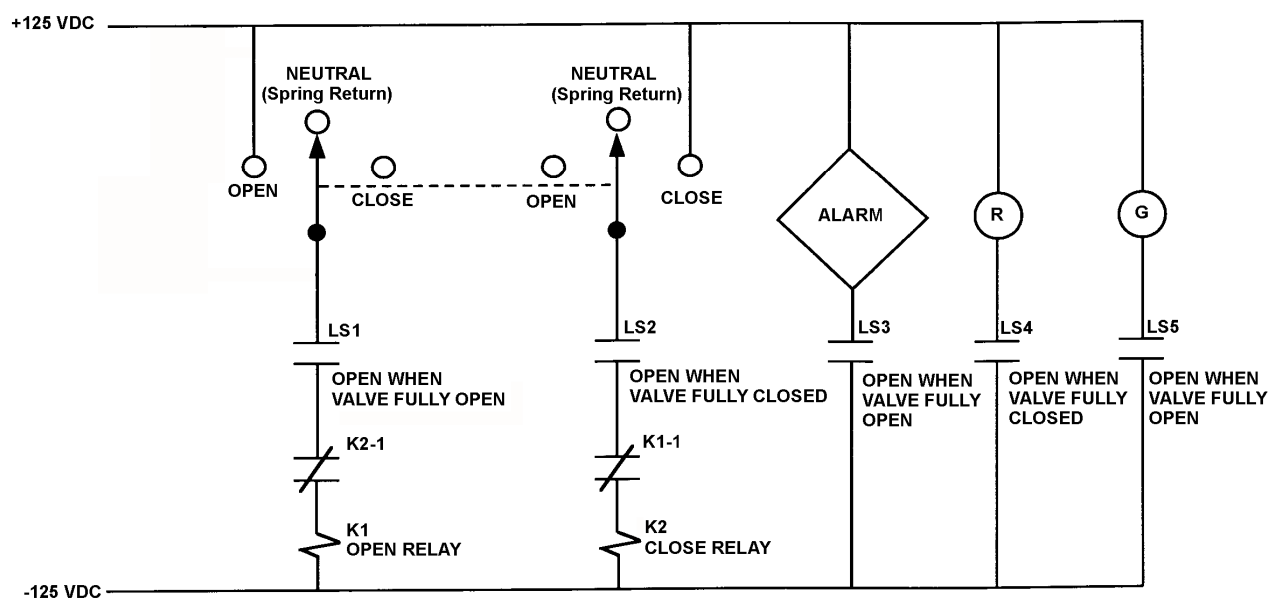

VALVE MOTOR CONTROL CIRCUIT

TOPIC: 291008
KNOWLEDGE: K1.06 [3.2/3.6]
QID: B5022 (P1239)

Refer to the drawing of a valve motor control circuit (see figure below).

Note: Limit switch (LS) contacts are shown open regardless of valve position, but relay contacts are shown open/closed according to the standard convention for control circuit drawings.

If the valve is currently closed, when will the alarm actuate?

A. As soon as PB2 is pushed.

B. Ten seconds after PB2 is pushed if the valve is still closed.

C. Immediately upon pushing PB2 and for the next 10 seconds if the valve remains closed.

D. Ten seconds after PB2 is pushed if the valve is still stroking open.

ANSWER: B.

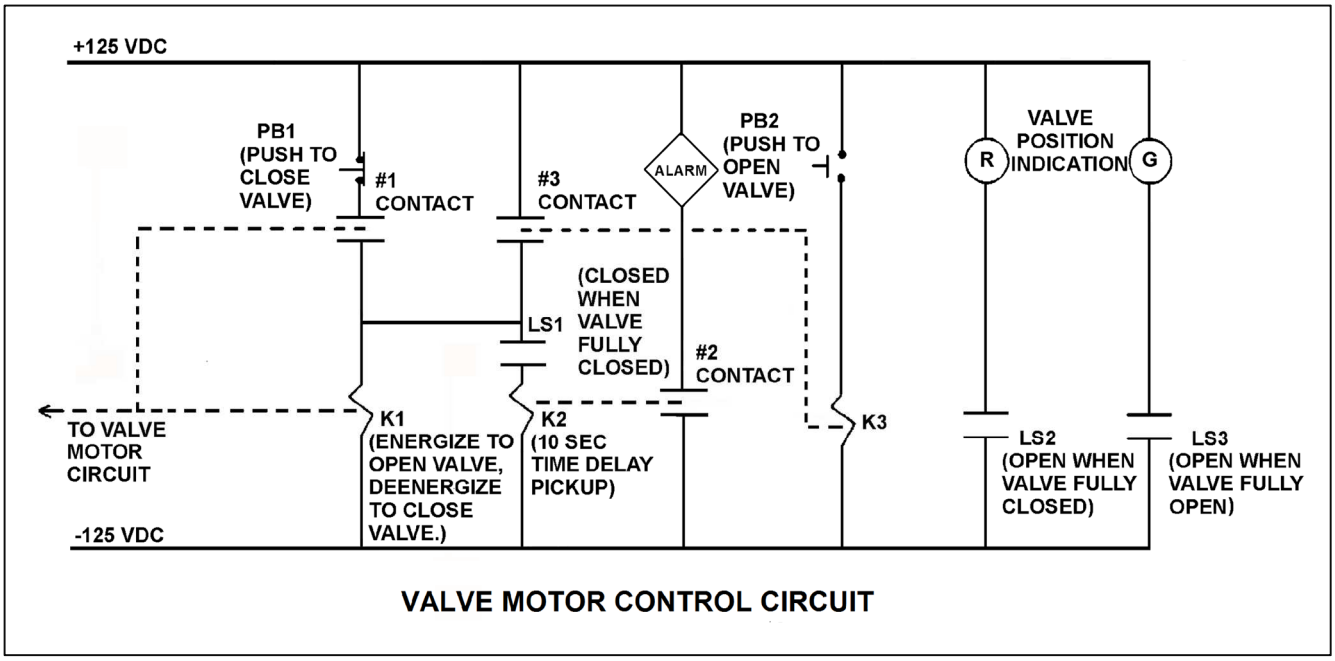

VALVE MOTOR CONTROL CIRCUIT

TOPIC: 291008
KNOWLEDGE: K1.06 [3.2/3.6]
QID: B5121 (P5120)

Refer to the drawing of a motor and its control circuit (see figure below).

Note: Relay contacts are shown open/closed according to the standard convention for control circuit drawings.

The motor has been idle for several days when it is decided to start the motor. What is the status of the starting resistors before and after the motor START pushbutton is depressed?

A. Initially bypassed; bypass is removed immediately after the START pushbutton is depressed.

B. Initially bypassed; bypass is removed following a preset time delay after the START pushbutton is depressed.

C. Initially inserted in the motor circuit; bypassed immediately after the START pushbutton is depressed.

D. Initially inserted in the motor circuit; bypassed following a preset time delay after the START pushbutton is depressed.

ANSWER: D.

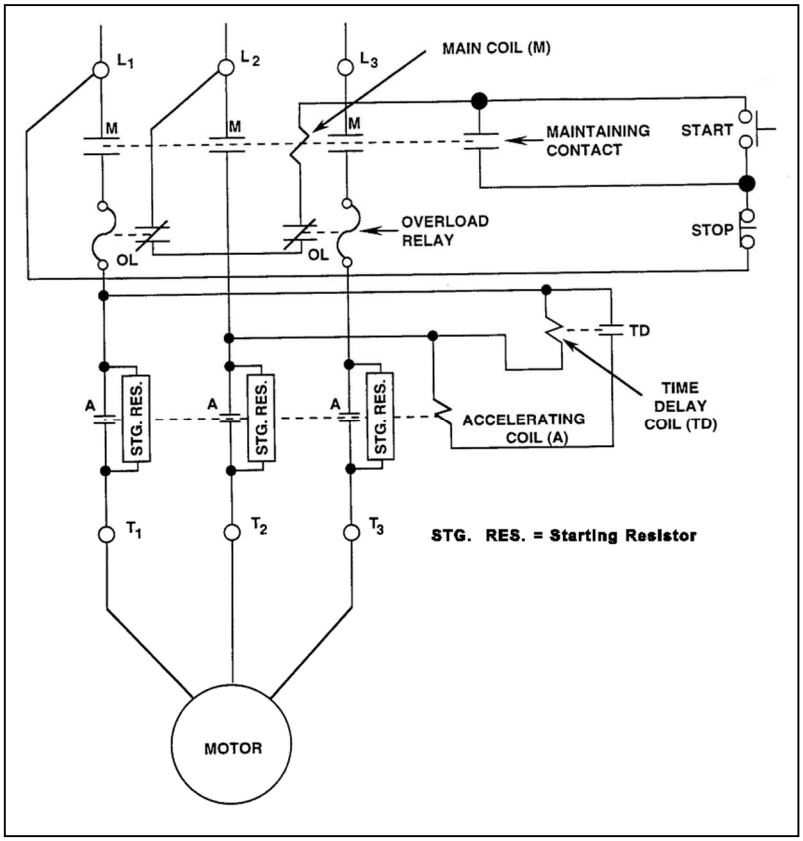

TOPIC: 291008
KNOWLEDGE: K1.06 [3.2/3.6]
QID: B5222 (P5221)

Refer to the drawing of a valve motor control circuit (see figure below) for a valve that is currently fully open and has a 10-second stroke time.

Note: Limit switch (LS) contacts are shown open regardless of valve position, but relay contacts are shown open/closed according to the standard convention for control circuit drawings.

The operator takes the control switch to CLOSE. Two seconds later, after verifying the valve is closing, the operator releases the control switch. Which one of the following describes the valve motor control circuit alarm response after the switch is released?

A. The alarm will continue to actuate for approximately 8 seconds.

B. The alarm will continue to actuate until additional operator action is taken.

C. The alarm will actuate after approximately 8 seconds.

D. The alarm will <u>not</u> actuate until additional operator action is taken.

ANSWER: B.

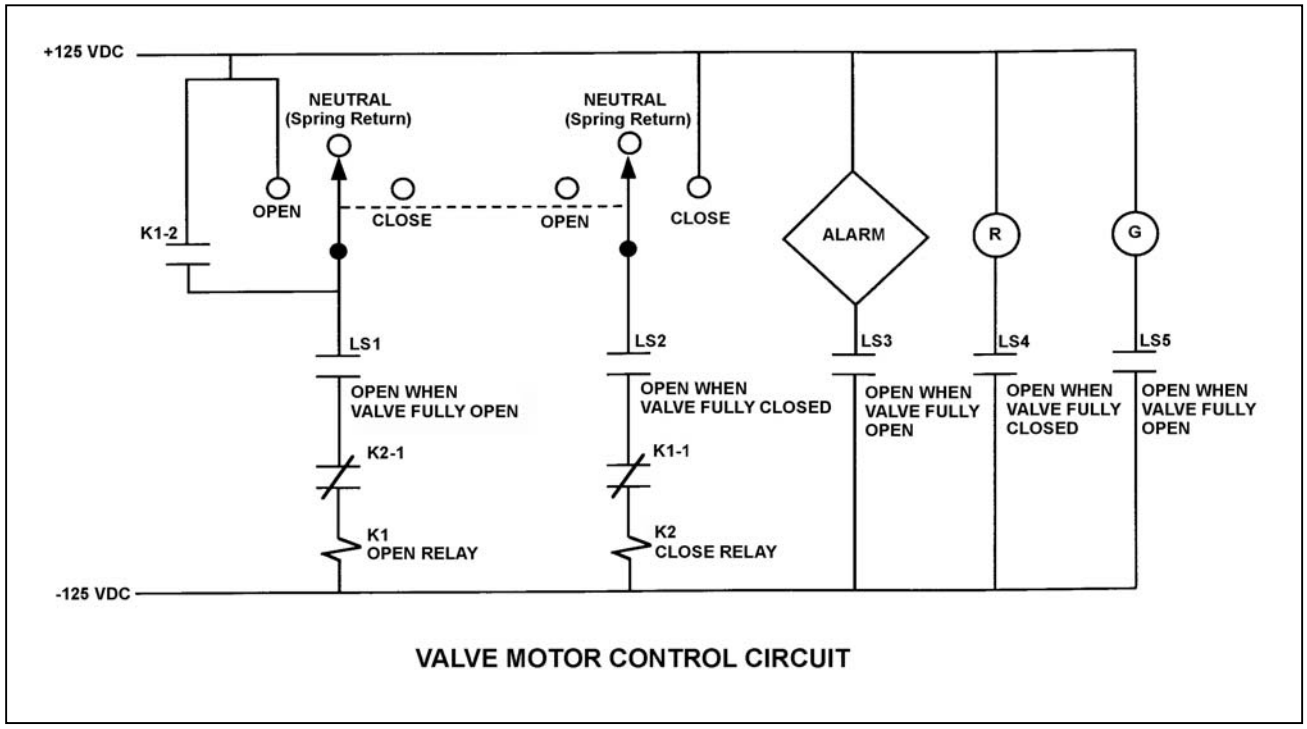

VALVE MOTOR CONTROL CIRCUIT

TOPIC: 291008
KNOWLEDGE: K1.06 [3.2/3.6]
QID: B5421 (P5421)

Refer to the drawing of a valve motor control circuit (see figure below).

Note: Limit switch (LS) contacts are shown open regardless of valve position, but relay contacts are shown open/closed according to the standard convention for control circuit drawings.

Which one of the following will actuate the alarm?

A. With the valve partially closed, the control switch is taken to the CLOSE position.

B. With the valve partially closed, the control switch is taken to the OPEN position.

C. With the valve fully open, the control switch is taken to the CLOSE position.

D. With the valve fully open, the control switch is taken to the OPEN position.

ANSWER: B.

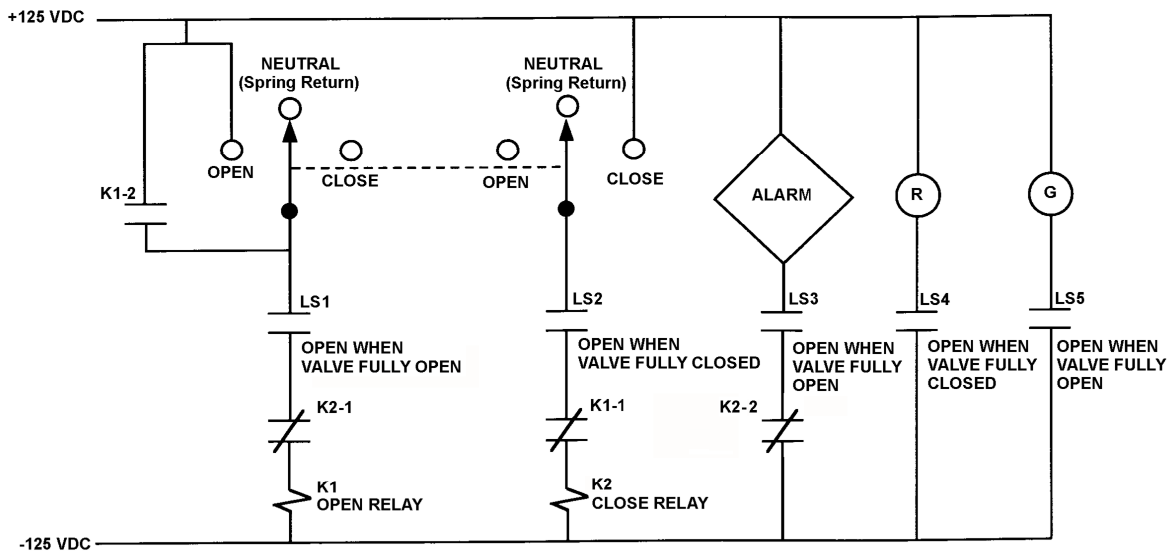

VALVE MOTOR CONTROL CIRCUIT

TOPIC: 291008
KNOWLEDGE: K1.06 [3.2/3.6]
QID: B5922 (P5920)

Refer to the drawing of a valve motor control circuit (see figure below) for a valve that is currently fully open and has a 10-second stroke time.

Note: Limit switch (LS) contacts are shown open regardless of valve position, but relay contacts are shown open/closed according to the standard convention for control circuit drawings.

The operator takes the control switch to CLOSE momentarily and the valve begins to close. Five seconds later, the operator takes the switch to OPEN momentarily and then releases the switch. Which one of the following describes the valve response after the switch is released?

A. The valve will stop closing and remain partially open.

B. The valve will stop closing and then go fully open.

C. The valve will close fully and remain fully closed.

D. The valve will close fully and then go fully open.

ANSWER: C.

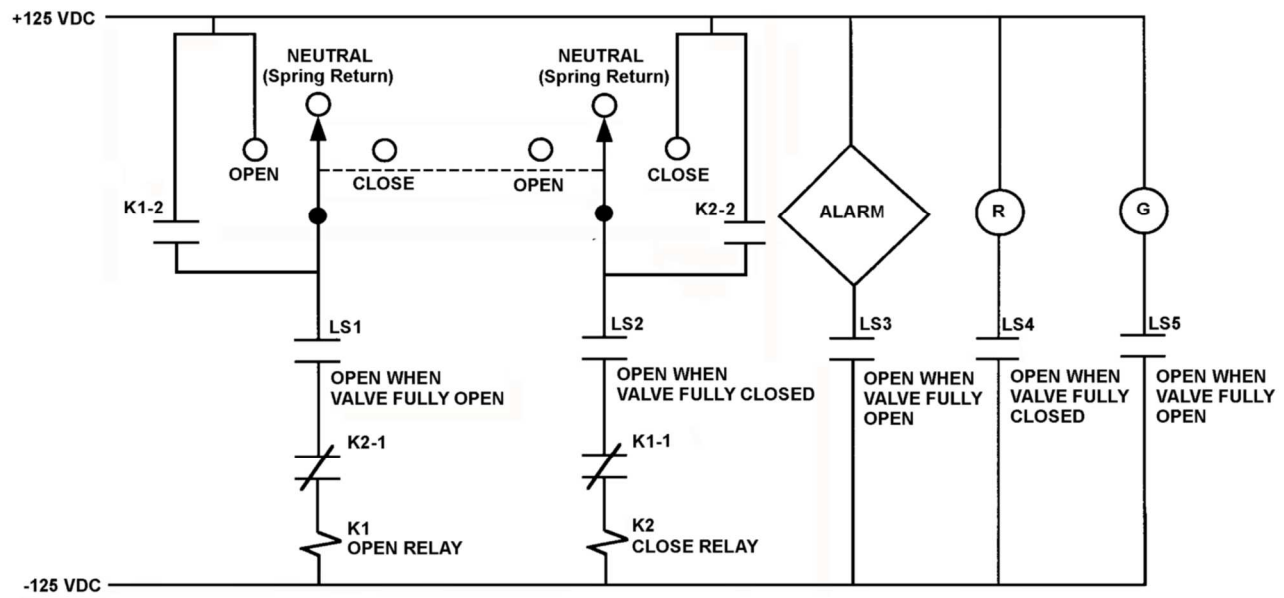

VALVE MOTOR CONTROL CIRCUIT

TOPIC: 291008
KNOWLEDGE: K1.06 [3.2/3.6]
QID: B6822 (P6820)

Refer to the drawing of a valve motor control circuit (see figure below) for a valve that is currently fully closed and has a 10-second stroke time.

Note: Limit switch (LS) contacts are shown open regardless of valve position, but relay contacts are shown open/closed according to the standard convention for control circuit drawings.

An operator takes the control switch to OPEN momentarily and the valve begins to open. Five seconds later, the operator takes the control switch to CLOSE momentarily and releases the switch. Which one of the following describes the valve response when the control switch is taken to CLOSE momentarily and released?

A. The valve will stop opening and remain partially open.

B. The valve will stop opening and then go fully closed.

C. The valve will open fully and remain fully open.

D. The valve will open fully and then go fully closed.

ANSWER: A.

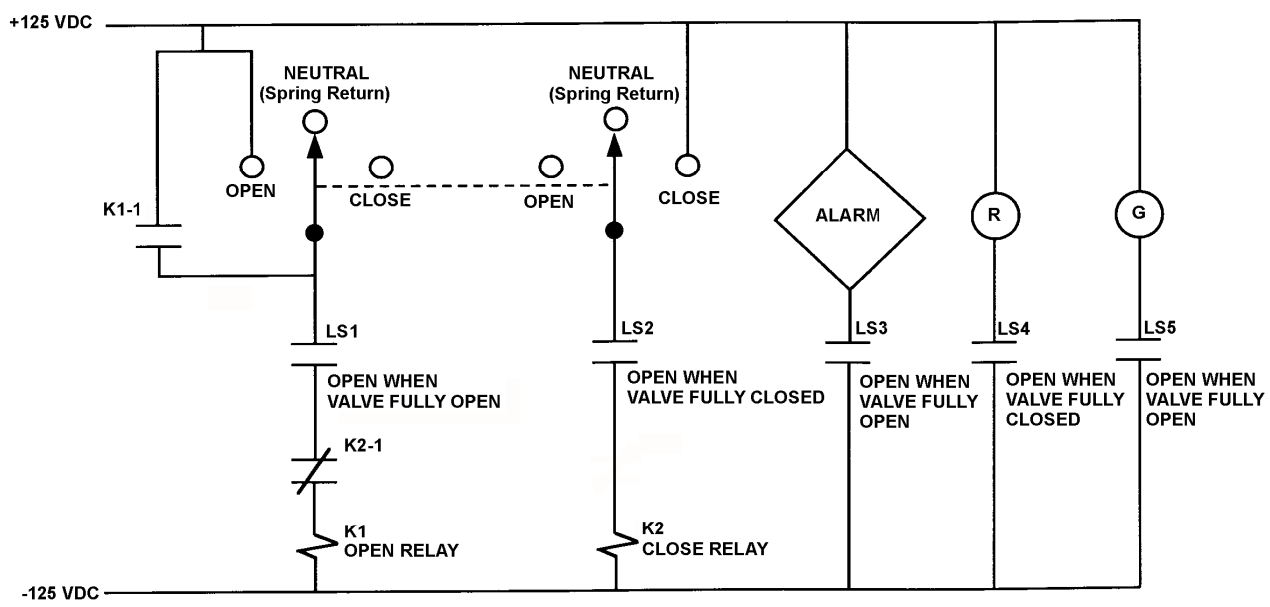

VALVE MOTOR CONTROL CIRCUIT

TOPIC: 291008
KNOWLEDGE: K1.06 [3.2/3.6]
QID: B7121 (P7122)

Refer to the drawing of a valve motor control circuit (see figure below) for a valve that is currently fully closed and has a 10-second stroke time.

Note: Limit switch (LS) contacts are shown open regardless of valve position, but relay contacts are shown open/closed according to the standard convention for control circuit drawings.

The operator takes the control switch to OPEN momentarily and the valve begins to open. Five seconds later, the operator takes the switch to CLOSE momentarily and then releases the switch. Which one of the following describes the valve response after the switch is released?

A. The valve will stop opening and remain partially open.

B. The valve will stop opening and then go fully closed.

C. The valve will open fully and remain fully open.

D. The valve will open fully and then go fully closed.

ANSWER: C.

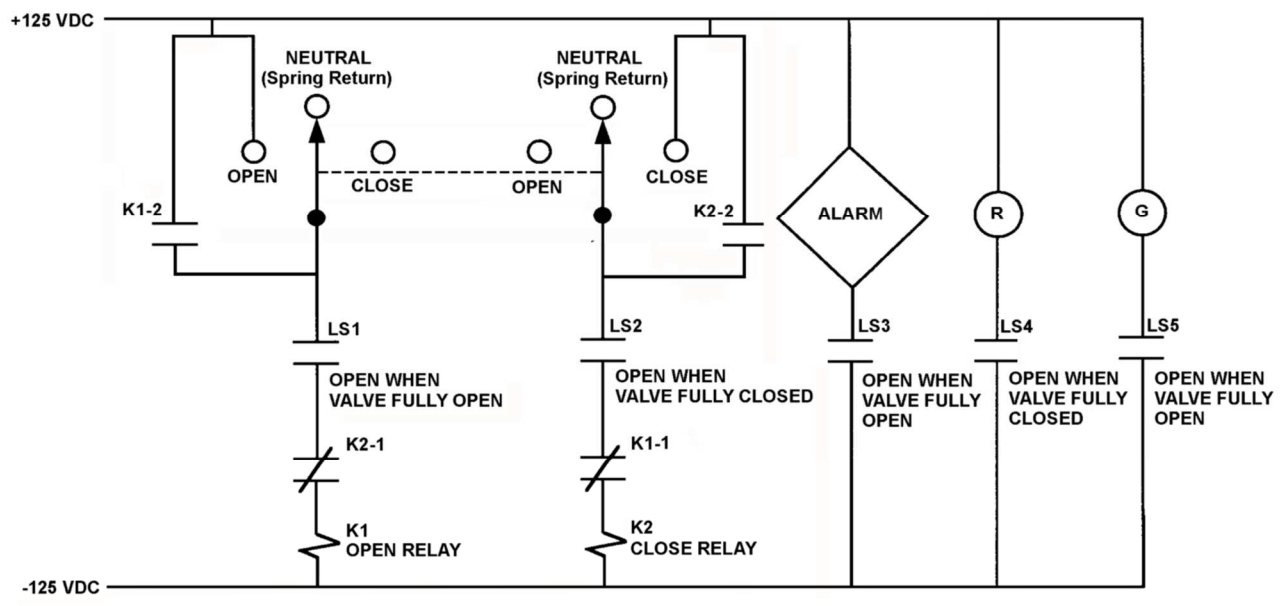

VALVE MOTOR CONTROL CIRCUIT

TOPIC: 291008
KNOWLEDGE: K1.06 [3.2/3.6]
QID: B7421 (P7421)

Refer to the drawing of a valve motor control circuit (see figure below) for a valve that is currently fully open and has a 10-second stroke time.

Note: Limit switch (LS) contacts are shown open regardless of valve position, but relay contacts are shown open/closed according to the standard convention for control circuit drawings.

The operator takes the control switch to CLOSE. Two seconds later, after verifying the valve is closing, the operator releases the control switch. Which one of the following describes the valve motor control circuit alarm response after the switch is released?

A. The alarm will continue to actuate for approximately 8 seconds.

B. The alarm will continue to actuate until additional operator action is taken.

C. The alarm will actuate after approximately 8 seconds.

D. The alarm will <u>not</u> actuate until additional operator action is taken.

ANSWER: A.

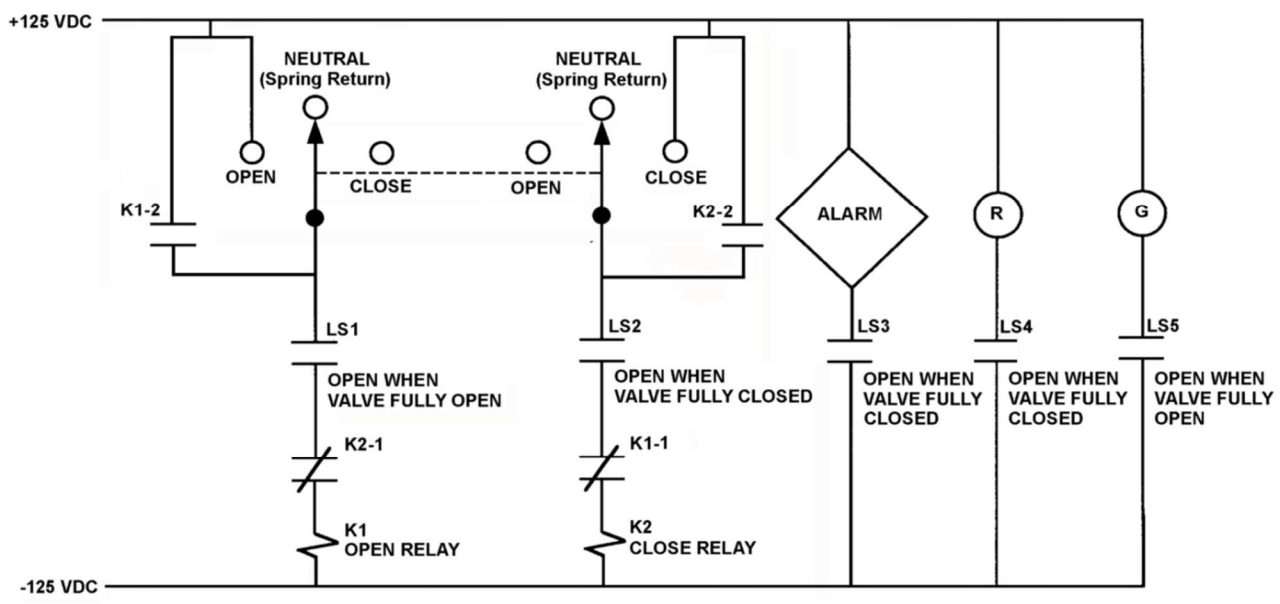

VALVE MOTOR CONTROL CIRCUIT

TOPIC: 291008
KNOWLEDGE: K1.06 [3.2/3.6]
QID: B7522 (P2839)

Refer to the drawing of a valve motor control circuit (see figure below) for a valve that is currently fully closed and has a 10-second stroke time.

Note: Limit switch (LS) contacts are shown open regardless of valve position, but relay contacts are shown open/closed according to the standard convention for control circuit drawings.

An operator takes the control switch to OPEN. Two seconds later, after verifying the valve is opening, the operator releases the control switch. Which one of the following describes the valve motor control circuit alarm response after the switch is released?

A. The alarm will continue to actuate for approximately 8 seconds.

B. The alarm will continue to actuate until additional operator action is taken.

C. The alarm will actuate after approximately 8 seconds.

D. The alarm will <u>not</u> actuate until additional operator action is taken.

ANSWER: A.

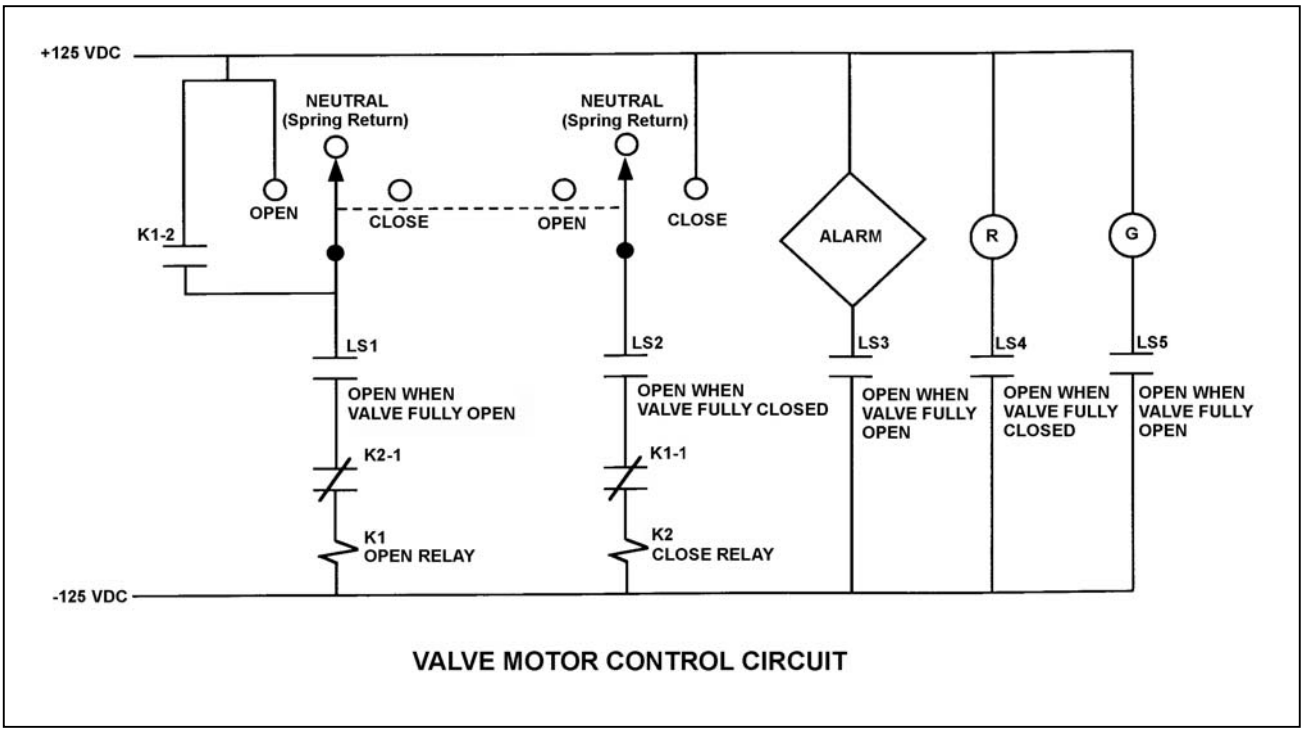

VALVE MOTOR CONTROL CIRCUIT

TOPIC: 291008
KNOWLEDGE: K1.06 [3.2/3.6]
QID: B7646 (P7646)

Refer to the drawing of a valve motor control circuit (see figure below) for a valve that is currently fully open and has a 16-second stroke time.

Note: Limit switch (LS) contacts are shown open regardless of valve position, but relay contacts are shown open/closed according to the standard convention for control circuit drawings.

An operator takes the control switch to CLOSE. Two seconds later, after verifying the valve is closing, the operator releases the control switch. When the valve stops moving, what will be the status of the alarm and the red (R) and green (G) indicating lights?

	Alarm	Red Ind. Light	Green Ind. Light
A.	On	On	On
B.	On	Off	On
C.	Off	On	Off
D.	Off	Off	Off

ANSWER: A.

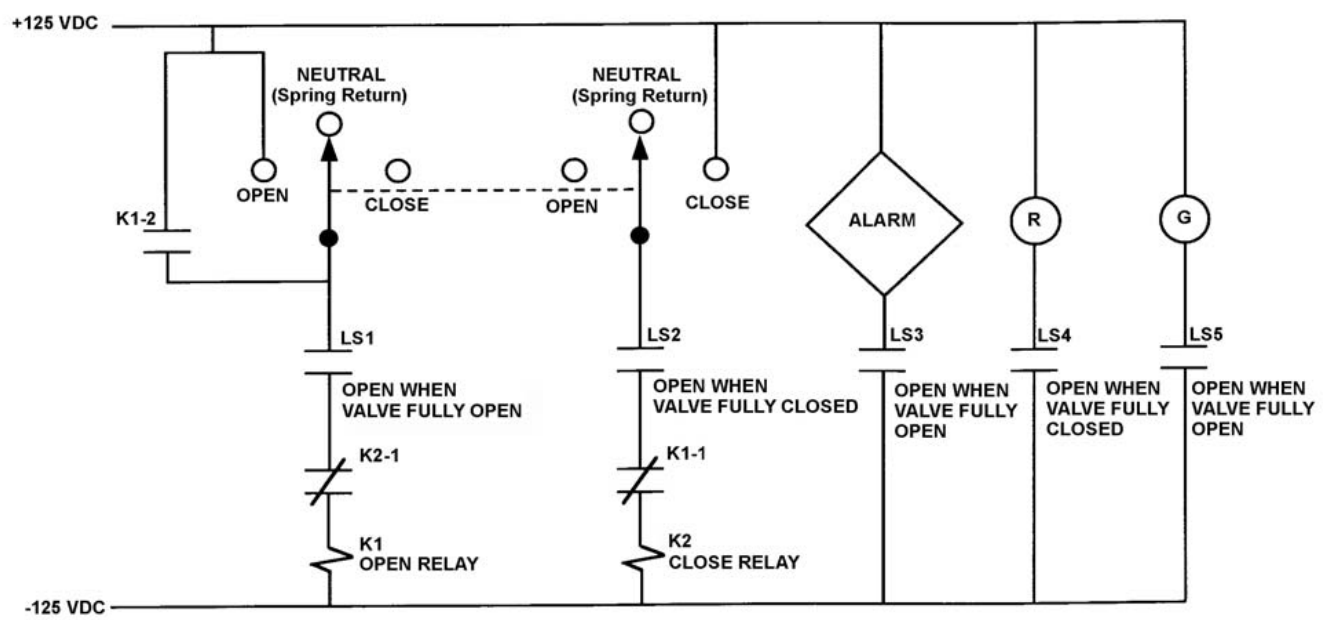

VALVE MOTOR CONTROL CIRCUIT

TOPIC: 291008
KNOWLEDGE: K1.06 [3.2/3.6]
QID: B7666 (P7666)

Refer to the drawing of a valve motor control circuit (see figure below) for a valve that is currently fully open and has a 10-second stroke time.

Note: Limit switch (LS) contacts are shown open regardless of valve position, but relay contacts are shown open/closed according to the standard convention for control circuit drawings.

The operator takes the control switch to CLOSE. Two seconds later, after verifying the valve is closing, the operator releases the control switch. Which one of the following describes the valve motor control circuit alarm response after the switch is released?

A. The alarm will actuate after approximately 8 seconds.

B. The alarm will <u>not</u> actuate until additional operator action is taken.

C. The alarm will continue to actuate for approximately 8 seconds.

D. The alarm will continue to actuate until additional operator action is taken.

ANSWER: B.

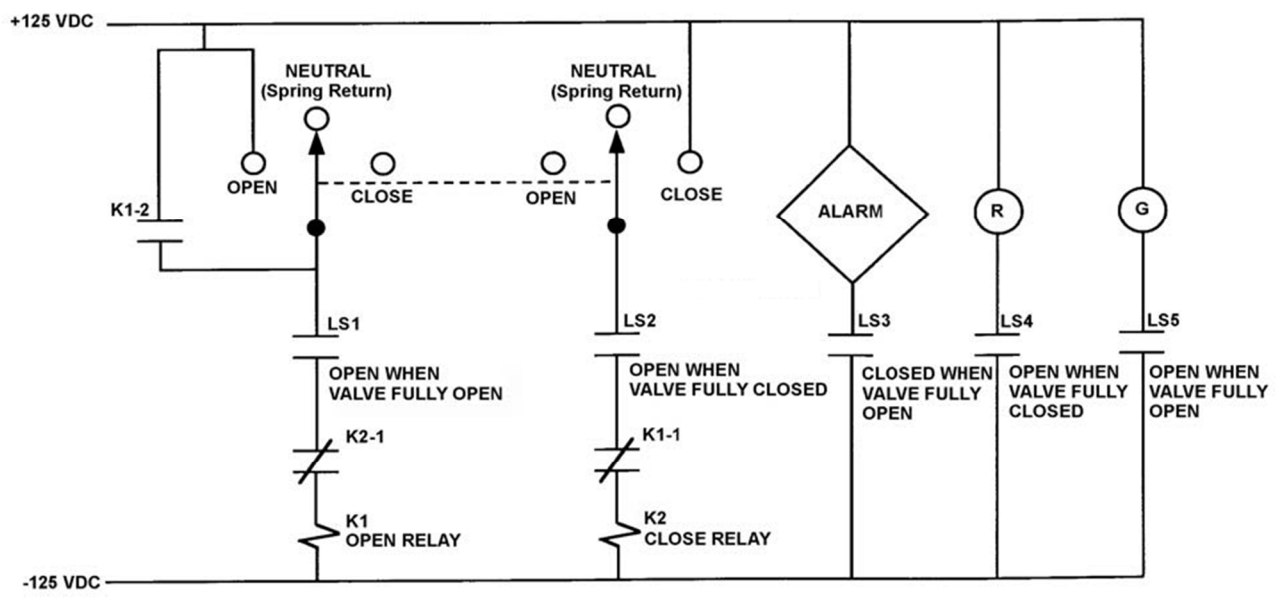

VALVE MOTOR CONTROL CIRCUIT

TOPIC: 291008
KNOWLEDGE: K1.06 [3.2/3.6]
QID: B7686 (P7686)

Refer to the drawing of a valve motor control circuit (see figure below) for a valve that is currently fully open and has a 16-second stroke time.

Note: Limit switch (LS) contacts are shown open regardless of valve position, but relay contacts are shown open/closed according to the standard convention for control circuit drawings.

An operator takes the control switch to CLOSE. Two seconds later, after verifying the valve is closing, the operator releases the control switch. When the valve stops moving, what will be the status of the alarm and the red (R) and green (G) indicating lights?

	Alarm	Red Ind. Light	Green Ind. Light
A.	On	On	On
B.	On	Off	Off
C.	Off	On	Off
D.	Off	Off	On

ANSWER: D.

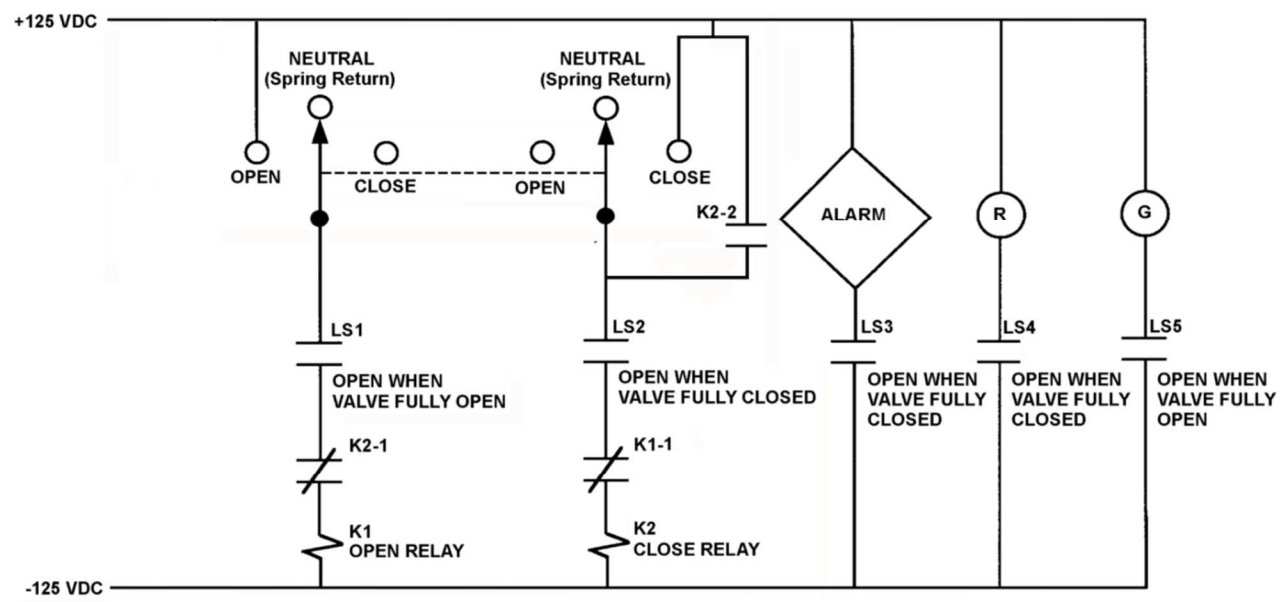

VALVE MOTOR CONTROL CIRCUIT

TOPIC: 291008
KNOWLEDGE: K1.07 [3.5/3.7]
QID: B242

The function of high voltage electrical disconnects is to...

A. isolate equipment electrically during no-load conditions.

B. isolate equipment electrically during overload conditions.

C. protect circuits during overcurrent conditions.

D. protect circuits during undervoltage conditions.

ANSWER: A.

TOPIC: 291008
KNOWLEDGE: K1.07 [3.5/3.7]
QID: B842 (P1241)

A 480 VAC motor is supplied power via an electrical disconnect in series with a breaker. Which one of the following describes the proper operations to isolate power to the motor?

A. Open the disconnect first, then the breaker.

B. Open the breaker first, then the disconnect.

C. Open the device that is closest to the motor first.

D. Open the device that is closest to the power source first.

ANSWER: B.

TOPIC: 291008
KNOWLEDGE: K1.07 [3.5/3.7]
QID: B1142 (P1141)

Which one of the following is an unsafe practice if performed while working on or near energized electrical equipment?

A. Using two hands for balance and to prevent dropping tools onto energized equipment.

B. Standing on insulating rubber material to increase the electrical resistance of the body to ground.

C. Having a person stand by to deenergize the equipment in the event of an emergency.

D. Covering exposed energized circuits with insulating material to prevent inadvertent contact.

ANSWER: A.

TOPIC: 291008
KNOWLEDGE: K1.07 [3.5/3.7]
QID: B3141 (P2940)

Which one of the following is an unsafe practice if performed while working on or near energized electrical equipment?

A. Use insulated tools to prevent inadvertent contact with adjacent equipment.

B. Cover exposed energized circuits with insulating material to prevent inadvertent contact.

C. Attach a metal strap from your body to a nearby neutral ground to ensure that you are grounded.

D. Have a person standing by with the ability to remove you from the equipment in the event of an emergency.

ANSWER: C.

TOPIC: 291008
KNOWLEDGE: K1.08 [3.4/3.5]
QID: B43 (P1839)

A main generator is being connected to an infinite power grid. Which one of the following will occur if the generator output breaker is closed with generator frequency 0.1 Hz lower than power grid frequency? (Assume that no generator protection relay actuates.)

A. The generator will motorize.

B. The generator will accept too much load.

C. The voltage of the generator will decrease to compensate for the lower frequency.

D. The entire connected system will operate at the frequency of the lowest frequency (the oncoming) generator.

ANSWER: A.

TOPIC: 291008
KNOWLEDGE: K1.08 [3.4/3.5]
QID: B122 (P107)

Closing the output breaker of a three-phase generator onto a deenergized bus can...

A. produce an overvoltage condition on the bus.

B. produce an overcurrent condition on the generator if the bus was not first unloaded.

C. result in a reverse power trip of the generator circuit breaker if generator frequency is low.

D. result in large reactive currents in the generator.

ANSWER: B.

TOPIC: 291008
KNOWLEDGE: K1.08 [3.4/3.5]
QID: B243 (P242)

Which one of the following generator conditions is most likely to result in equipment damage from high current flow?

A. Tripping the output breaker under full-load conditions.

B. Tripping the generator prime mover under full-load conditions.

C. Closing the output breaker onto a bus that has a short-circuit fault.

D. Closing the output breaker onto a bus that has an open-circuit fault.

ANSWER: C.

TOPIC: 291008
KNOWLEDGE: K1.08 [3.4/3.5]
QID: B342 (P41)

The primary reason for isolating emergency electrical loads from their power supply bus prior to energizing the bus via the emergency diesel generator is to prevent an...

A. overcurrent condition on the generator.

B. overcurrent condition on the loads.

C. underfrequency condition on the generator.

D. underfrequency condition on the loads.

ANSWER: A.

TOPIC: 291008
KNOWLEDGE: K1.08 [3.4/3.5]
QID: B343 (P341)

A main generator is being paralleled to the power grid. Generator voltage has been properly adjusted and the synchroscope is rotating slowly in the clockwise direction.

The generator breaker must be closed just as the synchroscope pointer reaches the 12 o'clock position to prevent...

A. motoring of the generator, due to unequal frequencies.

B. excessive MW load transfer to the generator, due to unequal frequencies.

C. excessive MW load transfer to the generator, due to out-of-phase voltages.

D. excessive arcing within the generator output breaker, due to out-of-phase voltages.

ANSWER: D.

TOPIC: 291008
KNOWLEDGE: K1.08 [3.4/3.5]
QID: B440 (P441)

During paralleling operations of the main generator to an infinite power grid, closing the generator output breaker with the frequency of the generator at 61 hertz and the grid frequency at 60 hertz will...

A. cause the generator to immediately increase load.

B. trip open the generator breaker on reverse power.

C. cause the generator voltage to increase.

D. cause the generator current to decrease.

ANSWER: A.

TOPIC: 291008
KNOWLEDGE: K1.08 [3.4/3.5]
QID: B743 (P743)

Which one of the following evolutions will draw the highest current from the main generator during operation of the output breaker?

A. Opening the output breaker under full-load conditions

B. Opening the output breaker under no-load conditions

C. Closing the output breaker with voltages out of phase

D. Closing the output breaker with voltages in phase

ANSWER: C.

TOPIC: 291008
KNOWLEDGE: K1.08 [3.4/3.5]
QID: B1143 (P1143)

A main generator is about to be connected to an infinite power grid with the following conditions:

Generator frequency	=	59.5 Hz
Grid frequency:	=	59.8 Hz
Generator voltage:	=	115.1 KV
Grid voltage:	=	114.8 KV

When the generator output breaker is closed, the generator will...

A. acquire real load and reactive load.

B. acquire real load but become a reactive load to the grid.

C. become a real load to the grid but acquire reactive load.

D. become a real load and a reactive load to the grid.

ANSWER: C.

TOPIC: 291008
KNOWLEDGE: K1.08 [3.4/3.5]
QID: B1240 (P1842)

A main generator is being prepared for paralleling with an infinite power grid. Which one of the following indicates that the main generator and grid voltages are in phase?

A. The synchroscope pointer is at the 12 o'clock position.

B. The frequency of the generator is equal to the frequency of the grid.

C. The synchroscope pointer is turning slowly in the clockwise direction.

D. The synchroscope pointer is turning slowly in the counterclockwise direction.

ANSWER: A.

TOPIC: 291008
KNOWLEDGE: K1.08 [3.4/3.5]
QID: B1744 (P1741)

A main generator is being paralleled to an infinite power grid. Generator voltage has been properly adjusted and the synchroscope is rotating slowly in the <u>counterclockwise</u> direction.

If the generator breaker is closed just prior to the synchroscope pointer reaching the 12 o'clock position, which one of the following is most likely to occur?

A. The breaker will close and the generator will supply only MW to the grid.

B. The breaker will close and the generator will supply both MW and MVAR to the grid.

C. The breaker will close and then open due to overcurrent.

D. The breaker will close and then open due to reverse power.

ANSWER: D.

TOPIC: 291008
KNOWLEDGE: K1.08 [3.4/3.5]
QID: B1843 (P241)

A main generator is being paralleled to an infinite power grid. Closing the output breaker of the generator with the frequency of the generator 0.1 Hz higher than grid frequency will result in the generator...

A. behaving as a real load to the grid.

B. behaving as a reactive load to the grid.

C. supplying a portion of the grid reactive load.

D. supplying a portion of the grid real load.

ANSWER: D.

TOPIC: 291008
KNOWLEDGE: K1.08 [3.4/3.5]
QID: B1941 (P43)

A main generator is being connected to an infinite power grid that is operating at 60 Hz. Generator output voltage is equal to the grid voltage but generator frequency is at 57 Hz.

Which one of the following generator conditions is most likely to occur if the generator output breaker is closed with voltages in phase (synchronized), but with the existing frequency difference? (Assume no generator breaker protective trip occurs.)

A. Reverse power

B. Underfrequency

C. Undervoltage

D. Overspeed

ANSWER: A.

TOPIC: 291008
KNOWLEDGE: K1.08 [3.4/3.5]
QID: B2042 (P2040)

A main generator is about to be connected to an infinite power grid. Which one of the following conditions will cause the main generator to immediately supply reactive power (MVAR) to the grid when the generator output breaker is closed?

A. Generator voltage is slightly higher than grid voltage.

B. Generator voltage is slightly lower than grid voltage.

C. The synchroscope is turning slowly in the clockwise direction.

D. The synchroscope is turning slowly in the counterclockwise direction.

ANSWER: A.

TOPIC: 291008
KNOWLEDGE: K1.08 [3.4/3.5]
QID: B2043 (P2044)

Two identical 1,000 MW electrical generators are being connected to the same electrical bus. Generator A is currently supplying the bus. Generator A and B output indications are as follows:

Generator A	Generator B
4,160 Volts	4,140 Volts
60.2 Hertz	60.8 Hertz
25 MW	0 MW
10 MVAR	0 MVAR

When the output breaker for generator B is closed, which generator is more likely to trip on reverse power?

A. Generator A, due to the higher initial voltage.

B. Generator A, due to the lower initial frequency.

C. Generator B, due to the lower initial voltage.

D. Generator B, due to the higher initial frequency.

ANSWER: B.

TOPIC: 291008
KNOWLEDGE: K1.08 [3.4/3.5]
QID: B2044 (P2143)

A main generator is about to be connected to an infinite power grid. Generator voltage equals grid voltage and the synchroscope is rotating slowly in the clockwise direction. The generator breaker is closed just as the synchroscope pointer reaches the 12 o'clock position.

Which one of the following will occur after the breaker is closed?

A. The breaker will remain closed and the generator will supply only MW to the grid.

B. The breaker will remain closed and the generator will supply both MW and MVAR to the grid.

C. The breaker will trip open due to overcurrent.

D. The breaker will trip open due to reverse power.

ANSWER: A.

TOPIC: 291008
KNOWLEDGE: K1.08 [3.4/3.5]
QID: B2142 (P2240)

A main generator is being prepared for paralleling with an infinite power grid. Which one of the following indicates that the generator and grid voltages are in phase?

A. The voltage of the generator is equal to the voltage of the grid.

B. The frequency of the generator is equal to the frequency of the grid.

C. The synchroscope pointer is turning slowly in the clockwise direction.

D. The synchroscope pointer is passing through the 12 o’clock position.

ANSWER: D.

TOPIC: 291008
KNOWLEDGE: K1.08 [3.4/3.5]
QID: B2343 (P2343)

A main generator is about to be connected to an infinite power grid. Generator voltage is slightly higher than grid voltage and the synchroscope is rotating slowly in the clockwise direction. The generator breaker is closed just as the synchroscope pointer reaches the 12 o'clock position.

Which one of the following will occur after the breaker is closed?

A. The breaker will remain closed and the generator will supply only MW to the grid.

B. The breaker will remain closed and the generator will supply both MW and MVAR to the grid.

C. The breaker will open due to overcurrent.

D. The breaker will open due to reverse power.

ANSWER: B.

TOPIC: 291008
KNOWLEDGE: K1.08 [3.4/3.5]
QID: B2443 (P2441)

A main generator is about to be connected to an infinite power grid. Generator voltage is equal to grid voltage and the synchroscope is rotating slowly in the counterclockwise direction. The generator breaker is closed just prior to the synchroscope pointer reaching the 12 o'clock position.

Which one of the following is most likely to occur after the breaker is closed?

A. The breaker will remain closed and the generator will supply only MW to the grid.

B. Thee breaker will remain closed and the generator will supply both MW and MVAR to the grid.

C. The breaker will open due to overcurrent.

D. The breaker will open due to reverse power.

ANSWER: D.

TOPIC: 291008
KNOWLEDGE: K1.08 [3.4/3.5]
QID: B2643 (P2440)

A main generator is being prepared for paralleling with an infinite power grid. At which one of the following synchroscope pointer positions is the main generator output voltage the farthest out of phase with the grid voltage?

A. 3 o'clock

B. 6 o'clock

C. 9 o'clock

D. 12 o'clock

ANSWER: B.

TOPIC: 291008
KNOWLEDGE: K1.08 [3.4/3.5]
QID: B2742 (P2743)

A main generator is being paralleled to an infinite power grid with the following conditions:

Generator frequency	=	59.9 Hz
Grid frequency	=	60.1 Hz
Generator voltage	=	114.8 KV
Grid voltage	=	115.1 KV

When the generator output breaker is closed, the generator will...

A. acquire real load and reactive load.

B. acquire real load, but become a reactive load to the grid.

C. become a real load to the grid, but acquire reactive load.

D. become a real load and a reactive load to the grid.

ANSWER: D.

TOPIC: 291008
KNOWLEDGE: K1.08 [3.4/3.5]
QID: B2843 (P2642)

A main generator is about to be connected to an infinite power grid. Generator voltage is slightly higher than grid voltage and the synchroscope is rotating slowly in the clockwise direction. The generator breaker is closed just as the synchroscope pointer reaches the 3 o'clock position.

Which one of the following is most likely to occur after the breaker is closed?

A. The breaker will remain closed and the generator will supply only MW to the grid.

B. The breaker will remain closed and the generator will supply both MW and MVAR to the grid.

C. The breaker will open due to overcurrent.

D. The breaker will open due to reverse power.

ANSWER: C.

TOPIC: 291008
KNOWLEDGE: K1.08 [3.4/3.5]
QID: B2942 (P2642)

A main generator is about to be connected to an infinite power grid. Generator voltage is slightly higher than grid voltage and the synchroscope is rotating slowly in the clockwise direction. The generator breaker is closed just as the synchroscope pointer reaches the 4 o'clock position.

Which one of the following will occur after the breaker is closed?

A. The breaker will remain closed and the generator will supply only MW to the grid.

B. The breaker will remain closed and the generator will supply both MW and MVAR to the grid.

C. The breaker will open due to overcurrent.

D. The breaker will open due to reverse power.

ANSWER: C.

TOPIC: 291008
KNOWLEDGE: K1.08 [3.4/3.5]
QID: B3842 (P3841)

Which one of the following will cause the most damage to the contact surfaces of a main generator output breaker?

A. An operator attempts to close the main generator output breaker with the generator and power grid frequencies matched but with voltages 180 degrees out of phase.

B. An operator attempts to close the main generator output breaker with the generator and power grid voltages in phase but with generator frequency 0.5 percent higher than power grid frequency.

C. The main generator output breaker automatically trips open on a loss of offsite power while the main generator is operating at its minimum rated load.

D. The main generator output breaker automatically trips open on a loss of offsite power while the main generator is operating at its maximum rated load.

ANSWER: A.

TOPIC: 291008
KNOWLEDGE: K1.08 [3.4/3.5]
QID: B4321 (P4321)

A main generator is about to be connected to an infinite power grid. The main generator has the following initial conditions:

Generator frequency	= 59.9 Hz	Generator voltage	= 115.1 KV
Grid frequency	= 60.1 Hz	Grid voltage	= 114.8 KV

When the generator output breaker is closed, the generator will...

A. acquire real load and reactive load.

B. acquire real load, but become a reactive load to the grid.

C. become a real load and a reactive load to the grid.

D. become a real load to the grid, but acquire reactive load.

ANSWER: D.

TOPIC: 291008
KNOWLEDGE: K1.08 [3.4/3.5]
QID: B4322 (P4322)

During a routine inspection of a main generator output breaker, a technician discovers severely damaged main contact surfaces. Which one of the following is the most likely cause of the damaged contact surfaces?

A. The main generator breaker automatically tripped open after it was closed with the generator and power grid voltages 60 degrees out of phase.

B. The main generator breaker automatically tripped open due to a faulty trip relay actuation while the main generator was operating unloaded.

C. The main generator breaker automatically tripped open on a loss of offsite power while the main generator was operating at its maximum rated load.

D. The main generator breaker automatically tripped open after it was closed with the generator and power grid voltages in phase but with generator frequency 0.2 Hz lower than power grid frequency.

ANSWER: A.

TOPIC: 291008
KNOWLEDGE: K1.08 [3.4/3.5]
QID: B5122 (P5121)

A main generator is about to be connected to an infinite power grid. Generator output frequency is slightly higher than grid frequency and generator output voltage is equal to grid voltage.

Which one of the following situations will exist when the main generator electrical conditions stabilize immediately after the generator output breaker is closed? (Assume no additional operator actions are taken.)

A. Generator output current will be 0.

B. Generator power factor will be 0.

C. Generator output MVAR will be 0.

D. Generator output MW will be 0.

ANSWER: C.

TOPIC: 291008
KNOWLEDGE: K1.08 [3.4/3.5]
QID: B5621 (P5620)

A main generator is being connected to an infinite power grid. The following frequencies exist just prior to closing the generator output breaker:

Generator frequency = 59.9 Hz
Grid frequency = 60.1 Hz

When conditions stabilize just after the generator output breaker is closed, the generator frequency will be _____; and the grid frequency will be _____.

A. 59.9 Hz; 59.9 Hz

B. 59.9 Hz; 60.1 Hz

C. 60.0 Hz; 60.0 Hz

D. 60.1 Hz; 60.1 Hz

ANSWER: D.

TOPIC: 291008
KNOWLEDGE: K1.08 [3.4/3.5]
QID: B6322 (P6321)

A diesel generator (DG) was initially operating at 80 percent of rated load supplying an isolated electrical bus when a malfunction caused the DG output breaker to trip. The breakers for all of the bus loads--all of which are large motors--remained closed, preparing the motors to restart upon restoration of power to the bus.

The DG output breaker has been repaired. With all of the bus load breakers still closed, which one of the following will occur when the DG output breaker is closed to reenergize the bus?

A. The DG will become lightly loaded.

B. The DG will return directly to its initial load.

C. The DG will experience slight overload conditions.

D. The DG will experience severe overload conditions.

ANSWER: D.

TOPIC: 291008
KNOWLEDGE: K1.08 [3.4/3.5]
QID: B6722 (P6722)

A main generator output breaker is about to be closed to connect the main generator to the power grid via the main transformer. The main transformer voltage and frequency are as follows:

Voltage = 20,000 volts
Frequency = 60.0 Hz

Which combination of main generator voltage and frequency will ensure that the main generator will immediately supply real (MW) and reactive (MVAR) electrical power to the power grid when the main generator output breaker is closed?

A. 19,950 volts; 59.9 Hz

B. 19,950 volts; 60.1 Hz

C. 20,050 volts; 59.9 Hz

D. 20,050 volts; 60.1 Hz

ANSWER: D.

TOPIC: 291008
KNOWLEDGE: K1.08 [3.4/3.5]
QID: B7022 (P7022)

If a main generator output breaker is closed when the generator output voltage is 5 degrees out of phase with the power grid voltage, the main generator will experience a _____ stress; if the breaker remains closed and no additional operator action is taken, the main generator voltage will _____ with the grid voltage.

A. minor; remain out of phase

B. minor; become locked into phase

C. potentially damaging; remain out of phase

D. potentially damaging; become locked into phase

ANSWER: B.

TOPIC: 291008
KNOWLEDGE: K1.08 [3.4/3.5]
QID: B7626 (P7626)

If a main generator output breaker is closed when the generator output voltage is 90 degrees out of phase with the power grid voltage, the main generator will experience a _____ stress; if the breaker remains closed and no additional operator action is taken, the main generator voltage will _____ with the grid voltage.

A minor; remain out of phase

B. minor; become locked into phase

C. potentially damaging; remain out of phase

D. potentially damaging; become locked into phase

ANSWER: D.

TOPIC: 291008
KNOWLEDGE: K1.08 [3.4/3.5]
QID: B7636 (P7636)

The main generator output breaker was just closed to connect the main generator to the main transformer. Just before the breaker was closed, the following parameter values existed:

Main Generator	Main Transformer
20,000 volts	20,050 volts
60.0 Hz	59.9 Hz

With no additional operator action, the main generator stabilized with the following parameter values:

25 MW
15 MVAR (in)

Now consider this following alternate set of parameters values:

Main Generator	Main Transformer
20,020 volts	20,050 volts
60.1 Hz	59.9 Hz

If the alternate set of parameter values had existed just before the breaker was closed, the resulting main generator MW value would have been _____; and the resulting main generator MVAR (in) value would have been _____.

A. smaller; larger

B. smaller; smaller

C. larger; larger

D. larger; smaller

ANSWER: D.

TOPIC: 291008
KNOWLEDGE: K1.09 [3.4/3.5]
QID: B44 (P642)

When a typical 4,160 volt breaker is racked to the TEST position, control power is _____ the breaker; and the breaker is _____ the load.

A. removed from; isolated from

B. removed from; connected to

C. available to; isolated from

D. available to; connected to

ANSWER: C.

TOPIC: 291008
KNOWLEDGE: K1.09 [3.4/3.5]
QID: B244

If a breaker is racked to the TEST position, the...

A. remote position indication for the breaker is still operational.

B. breaker can only be operated remotely from its associated remote control panel.

C. electrical jumpers must be connected to the operating coils to operate the breaker.

D. normal breaker opening and closing operations cannot be tested because the TEST position is for overload testing only.

ANSWER: A.

TOPIC: 291008
KNOWLEDGE: K1.09 [3.4/3.5]
QID: B1943 (P40)

Loss of breaker control power will cause...

A. breaker line voltage to indicate zero regardless of actual breaker position.

B. the remote breaker position to indicate open regardless of actual breaker position.

C. inability to operate the breaker locally and remotely.

D. failure of the closing spring to charge following local closing of the breaker.

ANSWER: D.

TOPIC: 291008
KNOWLEDGE: K1.09 [3.4/3.5]
QID: B2141 (P118)

Which one of the following results from a loss of control power to a breaker supplying a motor?

A. Motor ammeter indication will be zero regardless of actual breaker position.

B. Breaker position will remotely indicate closed regardless of actual position.

C. Breaker will trip open due to the actuation of its protective trip device.

D. Charging motor will <u>not</u> charge the closing spring after the breaker is locally closed.

ANSWER: D.

TOPIC: 291008
KNOWLEDGE: K1.10 [3.3/3.4]
QID: B644 (P844)

High-voltage disconnect switches are used to...

A. adjust the output voltage range from a main power transformer.

B. protect bus feeder breakers by opening upon bus short-circuit faults.

C. provide equipment isolation under no-load conditions.

D. bypass and isolate an electrical bus while maintaining the downstream buses energized.

ANSWER: C.

TOPIC: 291008
KNOWLEDGE: K1.10 [3.3/3.4]
QID: B1244

High voltage electrical disconnects should <u>not</u> be used to...

A. tie buswork sections together.

B. interrupt circuits under load.

C. electrically ground buswork.

D. isolate equipment electrically.

ANSWER: B.

TOPIC: 291008
KNOWLEDGE: K1.10 [3.3/3.4]
QID: B1544 (P1840)

Typical high-voltage transformer disconnect switches are designed to...

A. automatically protect the transformer from overcurrent conditions.

B. automatically trip open prior to transformer output breaker trip.

C. manually isolate the transformer during no-load conditions.

D. manually interrupt the transformer output circuit under any load when grounds are detected.

ANSWER: C.

TOPIC: 291008
KNOWLEDGE: K1.10 [3.3/3.4]
QID: B1842 (P243)

The function of high-voltage disconnect switches is to provide _____ electrical isolation of equipment during _____ conditions.

A. manual; no-load

B. manual; overload

C. automatic; no-load

D. automatic; overload

ANSWER: A.

TOPIC: 291008
KNOWLEDGE: K1.10 [3.3/3.4]
QID: B2244 (P943)

What is an advantage of using high-voltage disconnect switches instead of breakers to isolate main power transformers?

A. Disconnect switches can be operated either locally or remotely.

B. Disconnect switches provide direct visual indication that the circuit is broken.

C. Disconnect switches are cheaper and provide the same automatic protection as a breaker.

D. Disconnect switches are capable of interrupting a higher current flow with less heating than a breaker.

ANSWER: B.

TOPIC: 291008
KNOWLEDGE: K1.10 [3.3/3.4]
QID: B2744 (P2742)

Refer to the simplified drawing of an electrical distribution system showing 7.2 KV switchgear, step-down transformers, and 480 V motor control centers (MCCs) (see figure below).

The high voltage side of each step-down transformer has a remote-operated disconnect to allow transformer maintenance while keeping the other transformers in service. The control circuit for each disconnect is position-interlocked with the associated MCC feeder breaker.

Which one of the following describes the purpose served by the interlock?

A. Prevent damage to the disconnect.

B. Prevent damage to the transformer.

C. Prevent damage to the feeder breaker.

D. Prevent damage to the 480V MCC.

ANSWER: A.

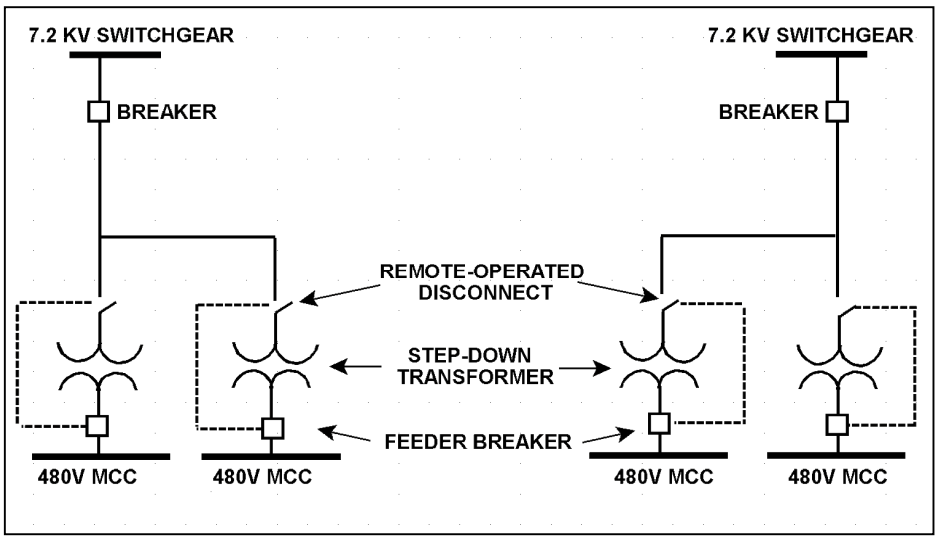

TOPIC: 291008
KNOWLEDGE: K1.10 [3.3/3.4]
QID: B2944 (P2944)

A 480 VAC motor control center supplies a load through a breaker and a manual disconnect switch. Which one of the following sequences will provide the greatest level of personnel safety when deenergizing the load for maintenance and when reenergizing the load after the maintenance?

	DEENERGIZING	REENERGIZING
A.	Open breaker first	Shut breaker first
B.	Open breaker first	Shut disconnect switch first
C.	Open disconnect switch first	Shut breaker first
D.	Open disconnect switch first	Shut disconnect switch first

ANSWER: B.

TOPIC: 291008
KNOWLEDGE: K1.10 [3.3/3.4]
QID: B3744 (P3744)

Refer to the simplified drawing of an electrical distribution system showing 7.2 KV switchgear, step-down transformers, and 480 V motor control centers (MCCs) (see figure below).

The high voltage side of each step-down transformer has a remote-operated disconnect. The control circuit for each disconnect is position-interlocked with the associated MCC feeder breaker. Which one of the following describes the interlock operating scheme that will provide the greatest protection for the disconnect?

A. Permits opening the feeder breaker only if the disconnect is closed.

B. Permits opening the feeder breaker only if the disconnect is open.

C. Permits opening the disconnect only if the feeder breaker is closed.

D. Permits opening the disconnect only if the feeder breaker is open.
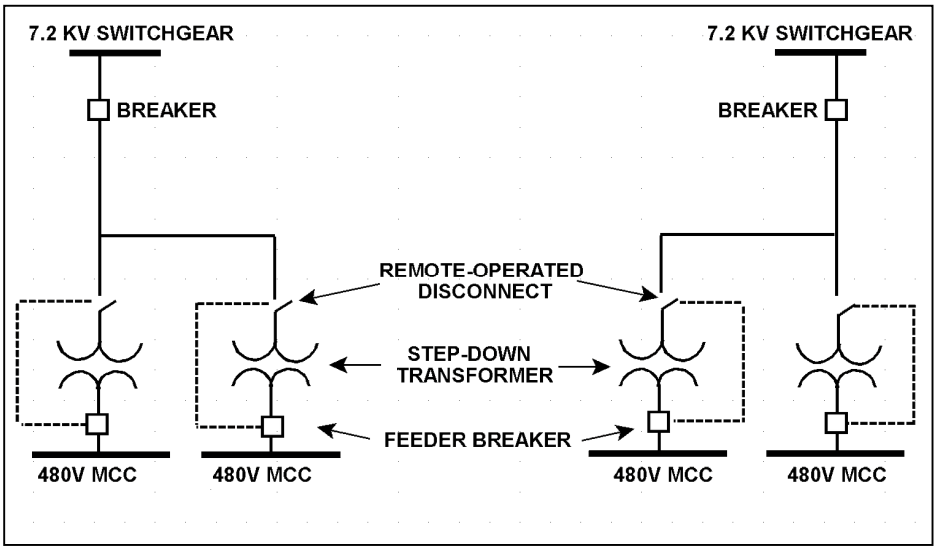
ANSWER: D.